CUI//REL to USA, UKR

TM 9-2350-439-23P-2

TECHNICAL MANUAL

FIELD MAINTENANCE MANUAL

REPAIR PARTS AND SPECIAL TOOLS LIST

FOR

[redacted]

BRADLEY FIRE SUPPORT VEHICLE
M7 BFIST SA[redacted]
(NSN 2350-01-572-5988) (EIC AP8)

VOLUME 2 OF 2

[redacted]

SUPERSEDURE NOTICE – TM 9-2350-439-23P-1 and TM 9-2350-439-23P-2 dated 30 November 2019 in conjunction with TM 9-2350-439-23 volumes 1-10 dated 30 November 2019 supersede TM 9-2350-439-23&P Vol 1-11 dated 31 May 2018.

DISTRIBUTION STATEMENT D – Distribution authorized to the Department of Defense and U.S. DoD contractors only due to Administrative or Operational Use - to protect technical or operational data or informa ion from automatic dissemination under the International Exchange Program or by other means. This protection covers publications required solely for official use or strictly for administrative or operational purposes. This statement may apply to manuals, pamphlets, technical orders, technical reports, and other publications containing valuable technical or operational data, as determined on 20 Jan 2017. [redacted]

WARNING – This document contains technical data whose export is restricted by the Arms Export Control Act (Title 22, U.S.C., Sec 2751, et. seq.) or the Export Administration Act of 1979 (Title 50, U.S.C., App. 2401, et seq.), as amended. Violations of these export laws are subject to severe criminal penalties. Disseminate in accordance with provisions of DoD Directive 5230.25.

DESTRUCTION NOTICE – For classified documents, follow the procedures in DoD 5220.22-M, National Industrial Security Program Operating Manual and/or DoDM 5200.01, Information Security Program. For unclassified, limited documents, destroy by any method that will prevent disclosure of contents or reconstruction of the document.

HEADQUARTERS, DEPARTMENT OF THE ARMY

30 NOVEMBER 2019

CUI//REL to USA, UKR

Controlled by: Product Manager (PdM) Bradley
CUI Category(ies): OPSEC
Limited Dissemination Control: FEDCON
POC: Chad Fox (586) 215-4909

BEREGINI BEREGINI BEREGINI

LIST OF EFFECTIVE PAGES/WORK PACKAGES

NOTE: TM 9-2350-439-23P-1 and TM 9-2350-439-23P-2 dated 30 November 2019 in conjunction with TM 9-2350-439-23 volumes 1-10 dated 30 November 2019 supersede TM 9-2350-439-23&P Vol 1-11 dated 31 May 2018. Zero in the "Change No." column indicates an original page or work package.

Date of issue for original manual is:

Original 30 November 2019

TOTAL NUMBER OF VOLUMES IS 2 TOTAL NUMBER OF PAGES FOR FRONT AND REAR MATTER IS 24 AND TOTAL NUMBER OF WORK PACKAGES IS 156, CONSISTING OF THE FOLLOWING:

Page/WP No.	Change No.	Page/WP No.	Change No.
VOLUME 2		WP 0209 (4 pgs)	0
Front cover	0	WP 0210 (4 pgs)	0
Blank	0	WP 0211 (6 pgs)	0
i - viii	0	WP 0212 (4 pgs)	0
WP 0178 (4 pgs)	0	WP 0213 (4 pgs)	0
WP 0179 (4 pgs)	0	WP 0214 (4 pgs)	0
WP 0180 (10 pgs)	0	WP 0215 (4 pgs)	0
WP 0181 (4 pgs)	0	WP 0216 (4 pgs)	0
WP 0182 (6 pgs)	0	WP 0217 (4 pgs)	0
WP 0183 (4 pgs)	0	WP 0218 (4 pgs)	0
WP 0184 (4 pgs)	0	WP 0219 (6 pgs)	0
WP 0185 (10 pgs)	0	WP 0220 (4 pgs)	0
WP 0186 (12 pgs)	0	WP 0221 (4 pgs)	0
WP 0187 (4 pgs)	0	WP 0222 (4 pgs)	0
WP 0188 (4 pgs)	0	WP 0223 (4 pgs)	0
WP 0189 (4 pgs)	0	WP 0224 (6 pgs)	0
WP 0190 (4 pgs)	0	WP 0225 (4 pgs)	0
WP 0191 (6 pgs)	0	WP 0226 (4 pgs)	0
WP 0192 (4 pgs)	0	WP 0227 (4 pgs)	0
WP 0193 (4 pgs)	0	WP 0228 (6 pgs)	0
WP 0194 (8 pgs)	0	WP 0229 (4 pgs)	0
WP 0195 (6 pgs)	0	WP 0230 (4 pgs)	0
WP 0196 (4 pgs)	0	WP 0231 (4 pgs)	0
WP 0197 (4 pgs)	0	WP 0232 (4 pgs)	0
WP 0198 (4 pgs)	0	WP 0233 (6 pgs)	0
WP 0199 (4 pgs)	0	WP 0234 (6 pgs)	0
WP 0200 (6 pgs)	0	WP 0235 (4 pgs)	0
WP 0201 (4 pgs)	0	WP 0236 (8 pgs)	0
WP 0202 (4 pgs)	0	WP 0237 (4 pgs)	0
WP 0203 (4 pgs)	0	WP 0238 (6 pgs)	0
WP 0204 (4 pgs)	0	WP 0239 (6 pgs)	0
WP 0205 (4 pgs)	0	WP 0240 (4 pgs)	0
WP 0206 (4 pgs)	0	WP 0241 (4 pgs)	0
WP 0207 (4 pgs)	0	WP 0242 (4 pgs)	0
WP 0208 (4 pgs)	0	WP 0243 (4 pgs)	0

LIST OF EFFECTIVE PAGES/WORK PACKAGES - (Continued)

Page/WP No.	Change No.
WP 0244 (4 pgs)	0
WP 0245 (4 pgs)	0
WP 0246 (4 pgs)	0
WP 0247 (4 pgs)	0
WP 0248 (4 pgs)	0
WP 0249 (4 pgs)	0
WP 0250 (4 pgs)	0
WP 0251 (4 pgs)	0
WP 0252 (4 pgs)	0
WP 0253 (4 pgs)	0
WP 0254 (4 pgs)	0
WP 0255 (4 pgs)	0
WP 0256 (8 pgs)	0
WP 0257 (4 pgs)	0
WP 0258 (4 pgs)	0
[redacted]	
WP 0269 (4 pgs)	0
[redacted]	
WP 0271 (8 pgs)	0
WP 0272 (8 pgs)	0
WP 0273 (14 pgs)	0
WP 0274 (4 pgs)	0
WP 0275 (8 pgs)	0
WP 0276 (8 pgs)	0
WP 0277 (4 pgs)	0
[redacted]	
WP 0279 (12 pgs)	0
[redacted]	
WP 0281 (4 pgs)	0
WP 0282 (4 pgs)	0
WP 0283 (4 pgs)	0
[redacted]	
WP 0285 (4 pgs)	0
[redacted]	
WP 0291 (4 pgs)	0

Page/WP No.	Change No.
[redacted]	
WP 0296 (4 pgs)	0
WP 0297 (4 pgs)	0
[redacted]	
WP 0300 (4 pgs)	0
WP 0301 (10 pgs)	0
[redacted]	
WP 0306 (12 pgs)	0
WP 0307 (4 pgs)	0
WP 0308 (4 pgs)	0
WP 0309 (4 pgs)	0
WP 0310 (4 pgs)	0
WP 0311 (4 pgs)	0
WP 0312 (4 pgs)	0
WP 0313 (4 pgs)	0
WP 0314 (4 pgs)	0
WP 0315 (4 pgs)	0
WP 0316 (4 pgs)	0
WP 0317 (4 pgs)	0
WP 0318 (4 pgs)	0
WP 0319 (4 pgs)	0
WP 0320 (12 pgs)	0
WP 0321 (4 pgs)	0
WP 0322 (4 pgs)	0
WP 0323 (4 pgs)	0
WP 0324 (4 pgs)	0
WP 0325 (4 pgs)	0
WP 0326 (8 pgs)	0
WP 0327 (4 pgs)	0
WP 0328 (4 pgs)	0
WP 0329 (4 pgs)	0
WP 0330 (6 pgs)	0
WP 0331 (4 pgs)	0
WP 0332 (148 pgs)	0
WP 0333 (156 pgs)	0
Inside back cover	0
Back cover	0

HEADQUARTERS, DEPARTMENT OF THE ARMY
WASHINGTON, D.C., 30 NOVEMBER 2019

TECHNICAL MANUAL

FIELD MAINTENANCE MANUAL

REPAIR PARTS AND SPECIAL TOOLS LIST

FOR

[redacted]

BRADLEY FIRE SUPPORT VEHICLE
M7 BFIST SA [redacted]
(NSN 2350-01-572-5988) (EIC AP8)

VOLUME 2 OF 2

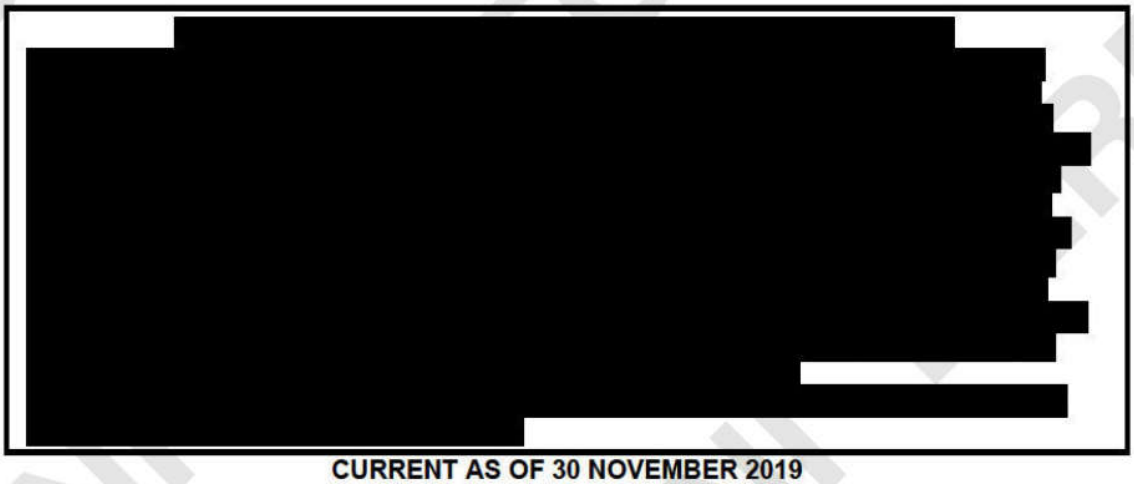

CURRENT AS OF 30 NOVEMBER 2019

SUPERSEDURE NOTICE – TM 9-2350-439-23P-1 and TM 9-2350-439-23P-2 dated 30 November 2019 in conjunction with TM 9-2350-439-23 volumes 1-10 dated 30 November 2019 supersede TM 9-2350-439-23&P Vol 1-11 dated 31 May 2018.

DISTRIBUTION STATEMENT D – Distribution authorized to the Department of Defense and U.S. DoD contractors only due to Administrative or Operational Use - to protect technical or operational data or informa ion from automatic dissemination under the International Exchange Program or by other means. This protection covers publications required solely for official use or strictly for administrative or operational purposes. This statement may apply to manuals, pamphlets, technical orders, technical reports, and other publications containing valuable technical or operational data, as determined on 20 Jan 2017. [redacted]

WARNING – This document contains technical data whose export is restricted by the Arms Export Control Act (Title 22, U.S.C., Sec 2751, et. seq.) or the Export Administration Act of 1979 (Title 50, U.S.C., App. 2401, et seq.), as amended. Violations of these export laws are subject to severe criminal penalties. Disseminate in accordance with provisions of DoD Directive 5230.25.

DESTRUCTION NOTICE – For classified documents, follow the procedures in DoD 5220.22-M, National Industrial Security Program Operating Manual and/or DoDM 5200.01, Information Security Program. For unclassified, limited documents, destroy by any method that will prevent disclosure of contents or reconstruction of the document.

BEREGINI BEREGINI BEREGINI

TABLE OF CONTENTS

WP Sequence No.

VOLUME 2

GROUP FT	TURRET ASSEMBLY (FT) - 13024688, 12991912-1	WP 0178
GROUP FTAA	BASKET INSTALLATION (PRE-BUSK III) (FTAA) - 12956686	WP 0179
GROUP FTAA	BASKET INSTALLATION (BUSK III) (FTAA) - 12956686-1	WP 0180
GROUP FTAAA	BASKET, WEAPON STATION (FTAAA) - 12956634 (PRE-BUSK III), 12956634-80 (BUSK III)	WP 0181
GROUP FTAB	COMMANDERS HATCH (FTAB) - 12976502, 12933361	WP 0182
GROUP FTAB	GUNNERS HATCH (FTAB) - 12976502, 12933361	WP 0183
GROUP FTABA	INTERNAL HATCH RELEASE INSTL (FTABA) - 13007360	WP 0184
GROUP FTAC	TURRET ARMOR INSTL (FTAC) - 13024674	WP 0185
GROUP FTAC	TURRET ARMOR INSTL (FTAC) - 12933737, 12933737-1	WP 0186
GROUP FTAD	GUARD INSTL, 25MM GUN (FTAD) - 12956727	WP 0187
GROUP FTAE	BULKHEAD DOOR INSTL, 7.62 (FTAE) - 12956679	WP 0188
GROUP FTAF	ROTOR COVER INSTL (FTAF) - 9379988-1	WP 0189
GROUP FTAG	ARMOR, SUPPLEMENTAL (FTAG) - 13024772	WP 0190
GROUP FTAH	SIGHT SHIELD/DOOR INSTL (FTAH) - 12956673, 12956673-1	WP 0191
GROUP FTAHA	DEFOGGER INSTL (FTAHA) - 12956676	WP 0192
GROUP FTAHAA	FAN ASSEMBLY, VANEAXIAL (FTAHAA) - 12295021	WP 0193
GROUP FTAI	TURRET STOWAGE INSTL (FTAI) - 13024673 (PRE-BUSK III), 13024673-2 (BUSK III)	WP 0194
GROUP FTAI	TURRET STOWAGE INSTL (FTAI) - 12976764 (PRE-BUSK III), 12976764-5 (BUSK III)	WP 0195
GROUP FTAIA	BOX, AMMUNITION, STOWAGE (FTAIA) - 12933629	WP 0196
GROUP FTAIB	BOX, AMMUNITION, STOWAGE (FTAIB) - 12933724	WP 0197
GROUP FTAJ	SEAT INSTL (PRE-BUSK III) (FTAJ) - 12334403	WP 0198
GROUP FTAJ	SEAT INSTL (BUSK III) (FTAJ) - 12334403-1	WP 0199
GROUP FTAJA	SEAT ASSEMBLY, COMMANDERS (FTAJA) - 12334404	WP 0200
GROUP FTAJB	SEAT ASSEMBLY, GUNNERS (FTAJB) - 12933517 (PRE-BUSK III), 12933517-1 (BUSK III)	WP 0201
GROUP FTAJBA	SEAT, VEHICULAR (FTAJBA) - 12933518	WP 0202
GROUP FTAJBB	GUNNERS FOOTREST ASSY (BUSK III) (FTAJBB) - 13024522	WP 0203
GROUP FTAK	TRAVERSE BEARING INSTL (FTAK) - 12294584	WP 0204
GROUP FTAL	TRAVEL LOCK INSTL (FTAL) - 12294801	WP 0205

TABLE OF CONTENTS – Continued

		WP Sequence No.
GROUP FTALA	TRAVEL LOCK ASSEMBLY (FTALA) - 12933685	WP 0206
GROUP FTAM	SMOKE GRENADE LAUNCHER INSTL (FTAM) - 12986302	WP 0207
GROUP FTAN	PADS INSTALLATION (FTAN) - 12293209	WP 0208
GROUP FTAO	ELECTRONICS COOLING INSTL (FTAO) - 13024678	WP 0209
GROUP FTAO	ELECTRONICS COOLING INSTL (FTAO) - 12976100	WP 0210
GROUP FTAP	CBRN GPFU INSTL,TURRET (FTAP) - 12933761	WP 0211
GROUP FTAQ	DAGR INSTALLATION (FTAQ) - 12992145	WP 0212
GROUP FTAR	25MM FEED SYSTEM INSTL (FTAR) - 12976629	WP 0213
GROUP FTARA	CAN, AMMO ASSEMBLY, 25MM (FTARA) - 12976628-1	WP 0214
GROUP FTARAB, FTARAE	ACCESS DOOR (FTARAB, FTARAE) - 12317156, 12317157	WP 0215
GROUP FTARAC	DRUM, AMMO, MACHINED (FTARAC) - 12294778	WP 0216
GROUP FTARC	CHUTE, AMMUNITION AP (FTARC) - 12328757-1	WP 0217
GROUP FTARD	CHUTE, AMMUNITION HE (FTARD) - 12328757-2	WP 0218
GROUP FTAS	BOX AND FEED CHUTE INSTL (FTAS) - 9380118	WP 0219
GROUP FTASB	CHUTE ASSEMBLY (FTASB) - 12323398-1	WP 0220
GROUP FTAT	TOW ROTOR INSTL (FTAT) - 12976040-1	WP 0221
GROUP FTATAB	SUPPORT ASSY, TOW LAUNCHER (FTATAB) - 12986346-1	WP 0222
GROUP FTATABA	BASEPLATE, TOW LAUNCHER (FTATABA) - 12317054-1	WP 0223
GROUP FTATC	ROTOR ASSY, TOW (FTATC) - 13023196	WP 0224
GROUP FTAU	M240 GUN MOUNT AND ROTOR (FTAU) - 9380067	WP 0225
GROUP FTAUA	BORESIGHT EQUIPMENT (FTAUA) - 9380066	WP 0226
GROUP FTAUB	GUN MOUNT ASSEMBLY (FTAUB) - 9380068	WP 0227
GROUP FTAV	25MM WEAPON ROTOR INSTL (FTAV) - 12976621	WP 0228
GROUP FTAV	25MM WEAPON ROTOR INSTL (FTAV) - 12976621	WP 0229
GROUP FTAVA	EQUILIBRATOR, GUN (FTAVA) - 12294539	WP 0230
GROUP FTAVB	GUN MOUNT, 25MM WEAPON (FTAVB) - 9380157	WP 0231
GROUP FTAVC	ANTI-ROTATION MECHANISM (FTAVC) - 12295648	WP 0232
GROUP FTAX	TURRET DRIVE INSTL (FTAX) - 12956680	WP 0233
GROUP FTAX	TURRET DRIVE INSTL (FTAX) - 12956680	WP 0234
GROUP FTAXA	ELEVATION DRIVE, GUN (FTAXA) - 12317196	WP 0235
GROUP FTAXAB	GEARBOX ASSEMBLY, GUN (FTAXAB) - 12317197	WP 0236
GROUP FTAXB	TRAVERSE DRIVE ASSEMBLY (FTAXB) - 12976126	WP 0237

TABLE OF CONTENTS – Continued

		WP Sequence No.
GROUP FTAXBB	GEARBOX, TRAVERSE DRIVE (FTAXBB) - 12292588	WP 0238
GROUP FTAXBB	GEARBOX, TRAVERSE DRIVE (FTAXBB) - 12292588	WP 0239
GROUP FTAXD	GYRO ASSEMBLY, GUN, 2A208 (FTAXD) - 12292348	WP 0240
GROUP FTAXE	RATE GYROSCOPE, 2A207 - 12292349	WP 0241
GROUP FTAXFA	GRIP AND GIMBAL ASSEMBLY (FTAXFA) - 12976231	WP 0242
GROUP FTAZ	INCLINOMETER INSTL (FTAZ) - 9380234	WP 0243
GROUP FTBA	BACKUP SIGHT INSTL (FTBA) - 12976099	WP 0244
GROUP FTBAA	TELESCOPE, AZIMUTH (FTBAA) - 9380400	WP 0245
GROUP FTBAAA	OUTER HEAD ASSEMBLY (FTBAAA) - 9380401	WP 0246
GROUP FTBAAB	TELESCOPE ASSEMBLY (FTBAAB) - 9380402	WP 0247
GROUP FTBAABA	EYEPIECE HOUSING (FTBAABA) - 12309647	WP 0248
GROUP FTBAABAA	EYEPIECE ASSEMBLY (FTBAABAA) - 12309652	WP 0249
GROUP FTBAABB	INNER STRUCTURE (FTBAABB) - 9380404	WP 0250
GROUP FTBAABBB	CELL ASSEMBLY, OPTIC (FTBAABBB) - 9380410	WP 0251
GROUP FTBAABC	LOWER HOUSING ASSEMBLY (FTBAABC) - 9380411	WP 0252
GROUP FTBAABD	OPTICAL CELL ASSEMBLY (FTBAABD) - 9380403	WP 0253
GROUP FTBB	TOW DRIVE INSTL (FTBB) - 12294599-1	WP 0254
GROUP FTBBA	TOW ELEVATION DRIVE (FTBBA) - 12292344	WP 0255
GROUP FTBBAB	GEARBOX, TOW ELEVATION (FTBBAB) - 12292590	WP 0256
GROUP FTBBABA	ATTENUATOR, VARIABLE (FTBBABA) - 12292615	WP 0257
GROUP FTBC	POS SENSOR SYSTEM INSTL (FTBC) - 12976042-1	WP 0258
[redacted]	[redacted]	[redacted]
GROUP FTEA	TURRET ELECTRICAL INSTL (TURRET DRIVE/BASKET) (FTEA) - 13024689	WP 0269

TABLE OF CONTENTS – Continued

		WP Sequence No.
[redacted]	[redacted]	[redacted]
GROUP FTEA	TURRET ELECTRICAL INSTL (GUNNERS) (FTEA) - 13024689.....	WP 0271
GROUP FTEA	TURRET ELECTRICAL INSTL (COMMANDERS) (FTEA) - 13024689.....	WP 0272
GROUP FTEA	TURRET ELECTRICAL INSTL (HARNESS) (FTEA) - 13024689.....	WP 0273
GROUP FTEA	TURRET ELECTRICAL INSTL (TARGETING ASSY) (FTEA) - 13024689.....	WP 0274
GROUP FTEA	TURRET ELECTRICAL INSTL (GUNNERS) (FTEA) - 12956543-2.....	WP 0275
GROUP FTEA	TURRET ELECTRICAL INSTL (COMMANDERS) (FTEA) - 12956543-2.....	WP 0276
GROUP FTEA	TURRET ELECTRICAL INSTL (TURRET DRIVE/BASKET) (FTEA) - 12956543-2.....	WP 0277
[redacted]	[redacted]	[redacted]
GROUP FTEA	TURRET ELECTRICAL INSTL (HARNESS) (FTEA) - 12956543-2.....	WP 0279
[redacted]	[redacted]	[redacted]
GROUP FTEAB	DOMELIGHT (FTEAB) - MS51073-1.....	WP 0281
GROUP FTEAI	VANAXIAL, 2A10 (FTEAI) - 12308376.....	WP 0282
GROUP FTEAJ	COMMANDERS DISPLAY INSTL (FTEAJ) - 12976782, 13024677.....	WP 0283
GROUP FTEAL	CONTROL BOX, ELECTRICAL (FTEAL) - 13038600.....	WP 0284
GROUP FTEB	TURRET/CHASSIS ELECTRICAL INSTL (FTEB) - 1302CHAS-ELEC.....	WP 0285
[redacted]	[redacted]	[redacted]
[redacted]	[redacted]	[redacted]
[redacted]	[redacted]	[redacted]
GROUP FTED	BLUE FORCE TRACKING (FTED) - 13015236.....	WP 0289
[redacted]	[redacted]	[redacted]
GROUP VO	MRE HEATER, ACCESSORY KIT (M7 BFIST SA [redacted] (VO) - 57K6767....	WP 0291
[redacted]	[redacted]	[redacted]
[redacted]	[redacted]	[redacted]
[redacted]	[redacted]	[redacted]
[redacted]	[redacted]	[redacted]
[redacted]	[redacted]	[redacted]
GROUP VTHA/ VTHB	BC SPOTLIGHT/INFRARED KIT (VTHA/VTHB) - 13015188, 13015190.....	WP 0296
GROUP VTHC/ VTHCA	POWER LINE PROTECTION (VTHC/VTHCA) - 13015189, 13007325.....	WP 0297
[redacted]	[redacted]	[redacted]
[redacted]	[redacted]	[redacted]

TABLE OF CONTENTS – Continued

		WP Sequence No.
GROUP VTHF	SIGHT PROTECTION KIT (VTHF) - 13015187	WP 0300
GROUP VTJ	CREW2, MOD KIT (VTJ) - 13015013	WP 0301
[redacted]	[redacted]	[redacted]
[redacted]	[redacted]	[redacted]
[redacted]	[redacted]	[redacted]
[redacted]	[redacted]	[redacted]
GROUP T1AA	FIELD MAINTENANCE TOOL SET (T1AA) - 12587951	WP 0306
GROUP T1AAA	SLING, ENGINE AND TRANSMISSION (T1AAA) - 12350701	WP 0307
GROUP T1AAB	REMOVER, SHOCK ABSORBER (T1AAB) - 12298145	WP 0308
GROUP T1AAC	SLING, FINAL DRIVE (T1AAC) - 12589796	WP 0309
GROUP T1AAC	LIFTING TOOL, FINAL DRIVE AND SPROCKET CARRIER (T1AAC) - 12652287	WP 0310
GROUP T1AAE	TEST SET, FIRE SUPPRESSION (T1AAE) - 12496683	WP 0311
GROUP T1AAF	TEST BOX, FUEL PUMP (T1AAF) - 12471160	WP 0312
GROUP T1AAG	INSTALLATION DEVICE (T1AAG) - 12293043-1	WP 0313
GROUP T1AAH	LEVEL SUPPORT (T1AAH) - 12313787	WP 0314
GROUP T1AAHA	LEVEL TURRET DRIVE (T1AAHA) - 12325632	WP 0315
GROUP T1AAHB	SUPPORT LEVEL (T1AAHB) - 12325633	WP 0316
GROUP T1AAK	GROUND HOP KIT (T1AAK) - 12298101	WP 0317
GROUP T1AAKA	HOSE ASSEMBLY, NONMETALLIC (T1AAKA) - 12298167	WP 0318
GROUP T1AAM	SLING AND WIRE ROPE ASSY SET (T1AAM) - 13024628	WP 0319
GROUP T1AB	SUSTAINMENT MAINTENANCE TOOL SET (T1AB) - 12587953	WP 0320
GROUP T1ABD	STAND, MAINT, KIT (T1ABD) - SP-06321	WP 0321
GROUP T1ABE	FIXTURE, TRAVERSE (T1ABE) - 12292621	WP 0322
GROUP T1ABF	FIXTURE, GUN ELEVATION (T1ABF) - 12292622	WP 0323
GROUP T1ABG	FIXTURE, TOW DRIVE (T1ABG) - 12292623	WP 0324
GROUP T1ABH	FIXTURE, MOTOR ADAPTER (T1ABH) - 12292916	WP 0325
GROUP T1AC	TO&E TOOL SET (T1AC) - 12587952	WP 0326
GROUP T1ACA	MAINTENANCE STAND (T1ACA) - 12298097	WP 0327
GROUP T1AD	SUPPLEMENTAL FIELD TOOL SET (T1AD) - 412587954	WP 0328
GROUP T1AE	REPROGRAM, FIELD SUP - 12587955	WP 0329

TABLE OF CONTENTS – Continued

		WP Sequence No.
GROUP	REPAIR KITS	WP 0330
GROUP	BULK MATERIAL	WP 0331
NATIONAL STOCK NUMBER INDEX		WP 0332
PART NUMBER INDEX		WP 0333

MAINTAINER

TURRET ASSEMBLY (FT) - 13024688, 12991912-1

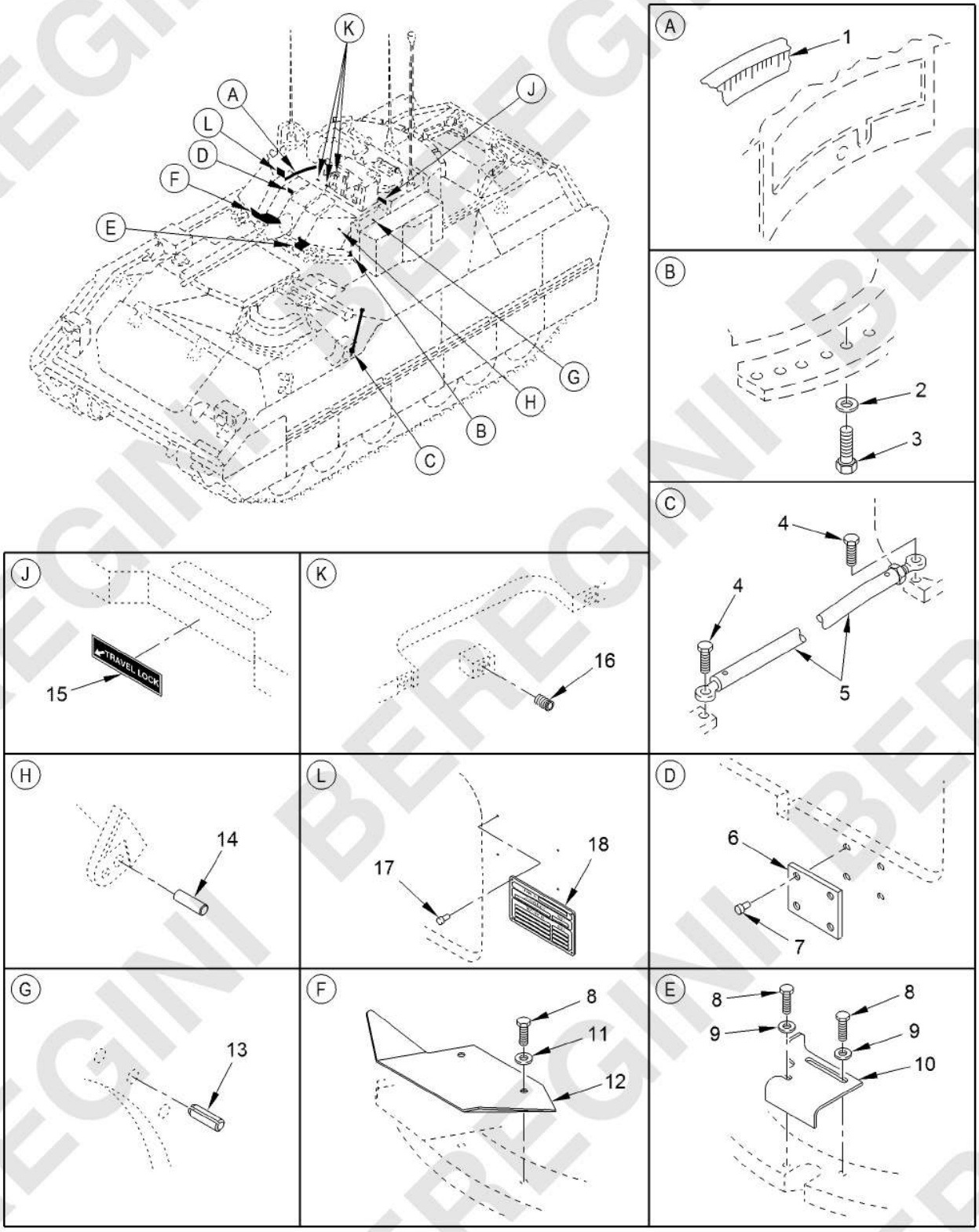

Figure 177. Turret Assembly (FT) - 13024688, 12991912-1

(1) ITEM NO.	(2) SMR CODE	(3) NSN	(4) CAGEC	(5) PART NUMBER	(6) DESCRIPTION AND USABLE ON CODE (UOC)	(7) QTY
					GROUP FT TURRET ASSEMBLY	
					FIGURE 177 Turret Assembly (FT) - 13024688, 12991912-1	
1	PAFZZ	7510-01-116-4528	19207	12294804	TAPE,IDENTIFICATION	1
2	PAFZZ	5310-00-149-9116	80205	MS20002C8	WASHER,RECESSED	48
3	PAFZZ	5305-00-071-2072	80204	B1821BH050C225N	SCREW,CAP,HEXAGON H	48
4	PAFZZ	5305-01-457-5175	05047	AES01C375A12AW9A9B	SCREW,CAP,HEXAGON H	2
5	PAFZZ	3040-01-627-0871	19207	12465875-4	CONNECTING LINK,RIG	1
6	PADZZ	9905-01-124-9300	19207	12308330	PLATE,IDENTIFICATIO	1
7	PADZZ	5305-00-253-5605	80205	MS21318-3	SCREW,DRIVE	4
8	PAFZZ	5305-00-068-0510	80204	B1821BH038C100N	SCREW,CAP,HEXAGON H	4
9	PAFZZ	5310-00-728-9957	19207	10910174-22	WASHER,FLAT	2
10	PAFZZ	5340-01-355-0872	19200	9381028	COVER,ACCESS	1
11	PAFZZ	5310-00-987-1294	19207	10910174-16	WASHER,FLAT	2
12	PAFZZ	1005-01-355-0566	19200	12933371	DEFLECTOR,LINK-CART	1
13	PADZZ	5315-00-822-9460	80205	MS16562-78	PIN,SPRING	1
14	PADZZ	5315-00-816-1329	96906	MS16555-77	PIN,STRAIGHT,HEADLE	2
15	PAFZZ	9905-01-149-8390	19207	12316814	PLATE,INSTRUCTION	1
16	PAFZZ	5325-01-093-5525	19207	10947291-12	INSERT,SCREW THREAD	3
17	PADZZ	5305-00-253-5620	80205	MS21318-29	SCREW,DRIVE	4
18	MDDZZ		19207	10930015	PLATE,INSTRUCTION MAKE FROM SHEET METAL P/N MS14357R019(96906)	1
					END OF FIGURE	

BEREGINI BEREGINI BEREGINI

MAINTAINER

BASKET INSTALLATION (PRE-BUSK III) (FTAA) - 12956686

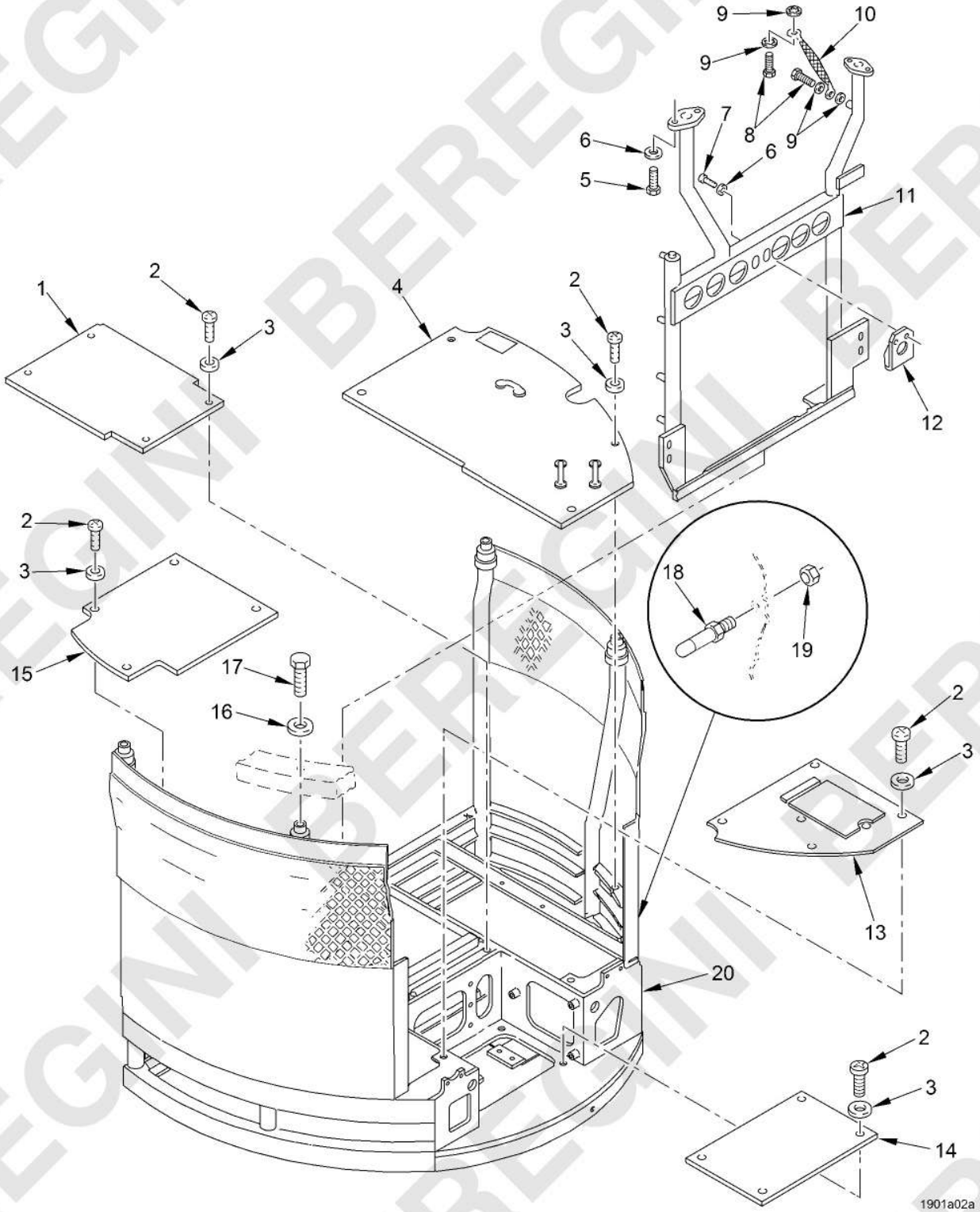

Figure 178. Basket Installation (Pre-BUSK III) (FTAA) - 12956686

(1) ITEM NO.	(2) SMR CODE	(3) NSN	(4) CAGEC	(5) PART NUMBER	(6) DESCRIPTION AND USABLE ON CODE (UOC)	(7) QTY
					GROUP FTAA BASKET INSTALLATION	
					FIGURE 178 Basket Installation (Pre-BUSK III) (FTAA) - 12956686	
1	PAFZZ	9535-01-459-0965	19200	12976435	PLATE,FLOOR,METAL	1
2	PAFZZ	5305-00-225-3843	80204	B1821BH025C100N	SCREW,CAP,HEXAGON H	20
3	PAFZZ	5310-01-335-7092	96906	MS27183-11	WASHER,FLAT	20
4	PAFZZ	1005-01-218-6171	19200	9379596	PLATE,FLOOR	1
5	PAFZZ	5305-00-068-0510	80204	B1821BH038C100N	SCREW,CAP,HEXAGON H	4
6	PAFZZ	5310-00-080-6004	96906	MS27183-14	WASHER,FLAT	6
7	PAFZZ	5305-00-543-4372	05047	AES01C375750AW9A91	SCREW,CAP,HEXAGON H	2
8	PAFZZ	5305-00-721-5492	05047	AES01C375625AW9A91	SCREW,CAP,HEXAGON H	2
9	PAFZZ	5310-00-061-1258	96906	MS45904-76	WASHER,LOCK	4
10	PAFZZ	5940-01-115-3264	19207	12294837	TERMINAL STRIP,GROU	1
11	PAFZZ	1005-01-113-3766	19207	12295200	SUPPORT,AMMUNITION	1
12	PAFZZ	5340-01-126-7835	19207	12307240	BRACKET,ANGLE	1
13	PAFZZ	1005-01-115-5442	19207	12307324	COVER,TURRET BASE	1
14	PAFZZ	2510-01-457-1316	19200	12976434	TREAD,METALLIC,NONS	1
15	PAFZZ	9535-01-459-0955	19200	12976437	PLATE,FLOOR,METAL	1
16	PAFZZ	5310-00-809-5998	96906	MS27183-18	WASHER,FLAT	4
17	PAFZZ	5305-00-071-2071	05047	AES02C500B00AW9A81	SCREW,CAP,HEXAGON H	4
18	PAFZZ	5325-00-174-2882	80020	49955-22L	STUD,SNAP FASTENER	1
19	PAFZZ	5310-00-902-6676	80205	MS21083N3	NUT,SELF-LOCKING,HE	1
20	XBFFF		19200	12956634	BASKET,WEAPON STATI SEE FIG. 180 FOR BREAKDOWN	1
					END OF FIGURE	

0179-3/4 blank

BEREGINI BEREGINI BEREGINI

MAINTAINER

BASKET INSTALLATION (BUSK III) (FTAA) - 12956686-1

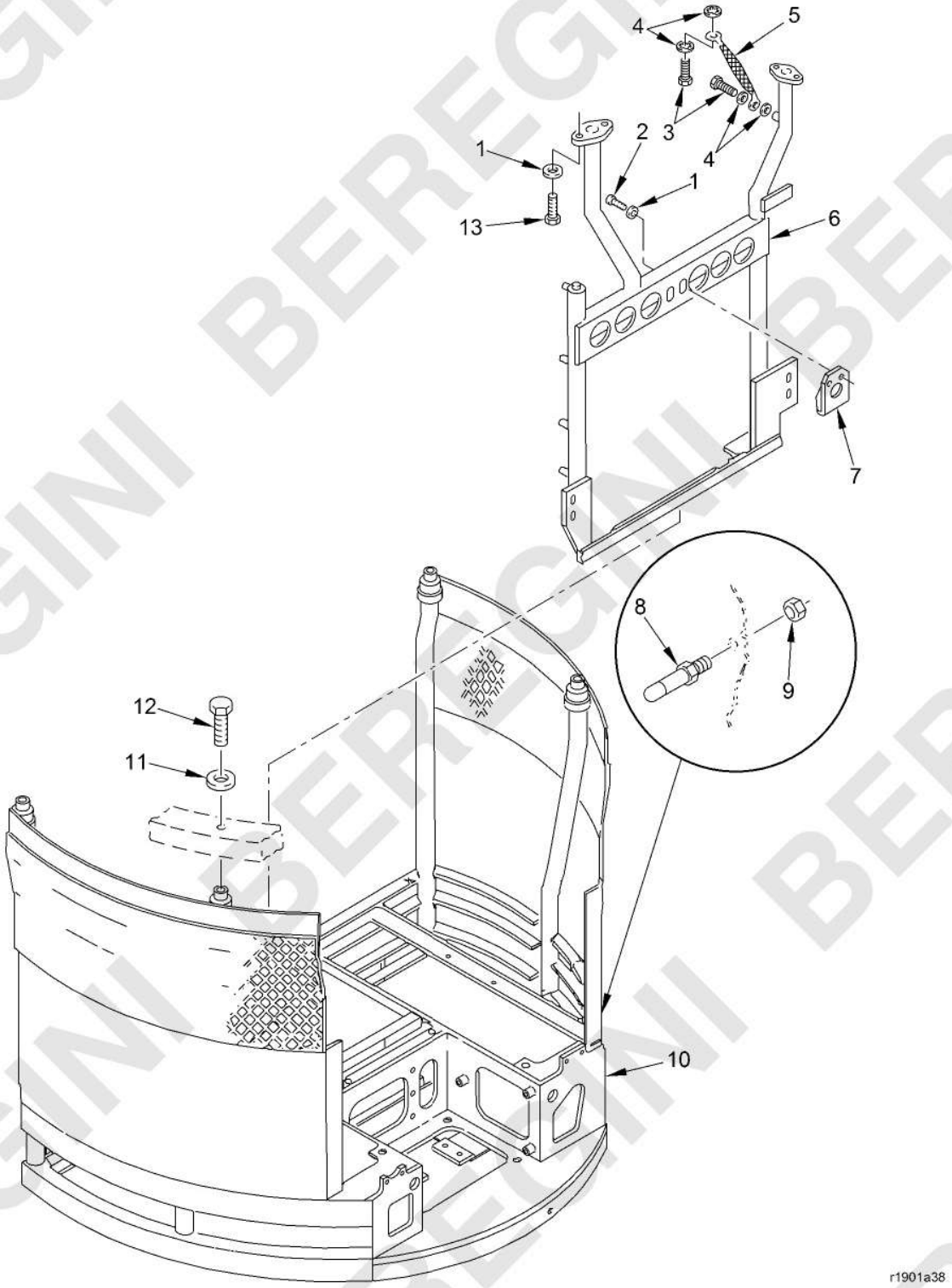

Figure 179. Basket Installation (BUSK III) (FTAA) - 12956686-1
(Sheet 1 of 6)

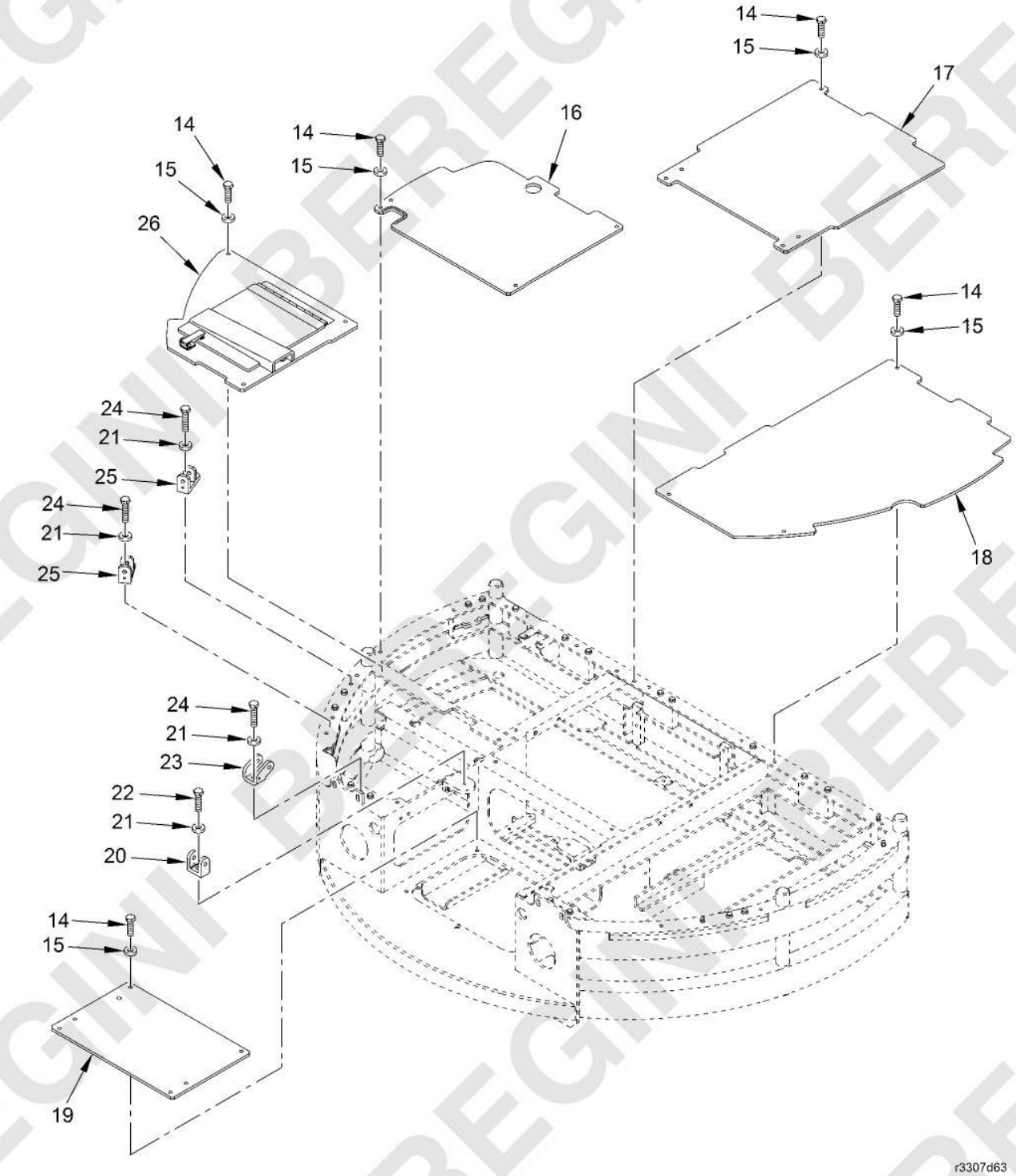

Figure 179. Basket Installation (BUSK III) (FTAA) - 12956686-1
(Sheet 2 of 6)

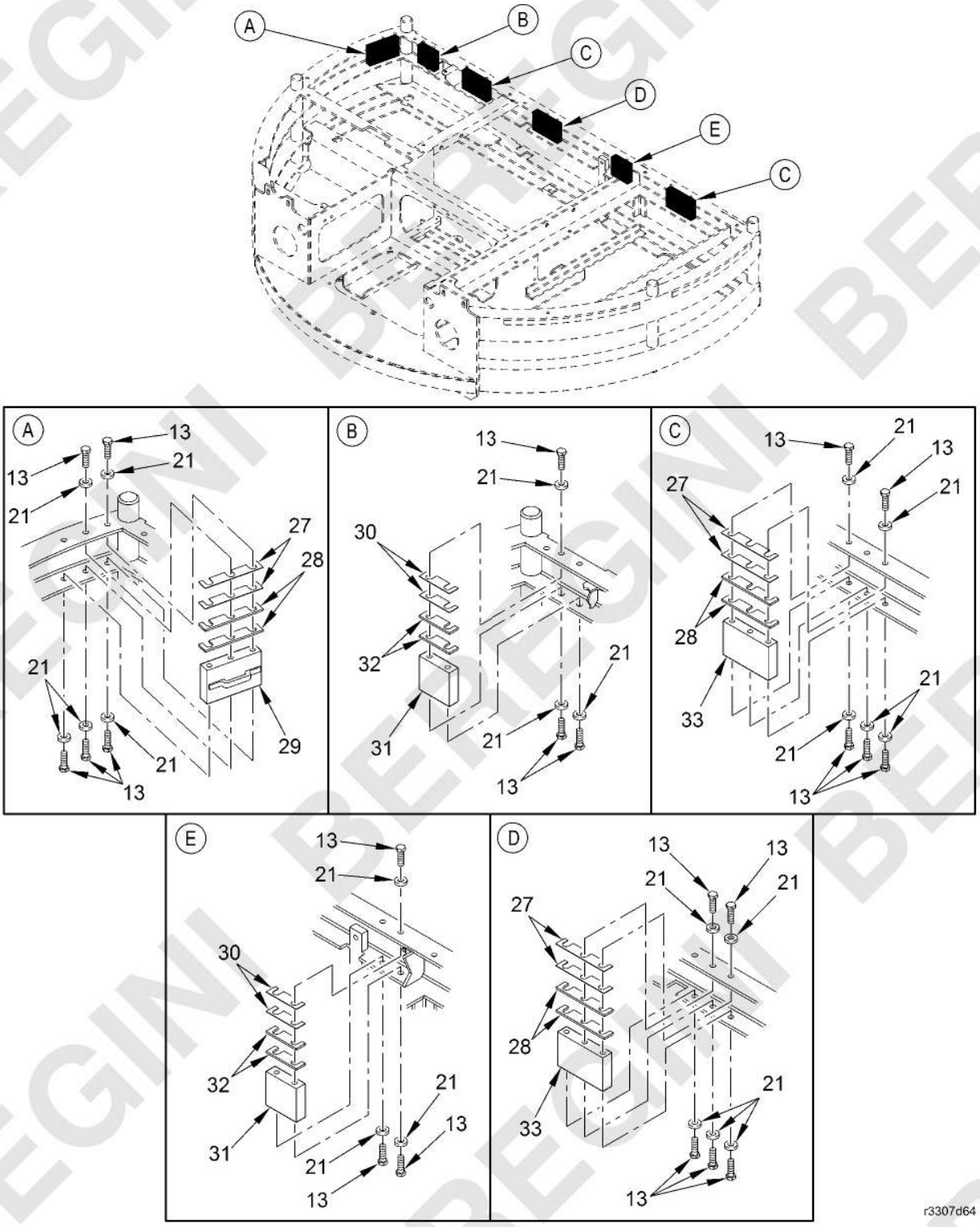

Figure 179. Basket Installation (BUSK III) (FTAA) - 12956686-1
(Sheet 3 of 6)

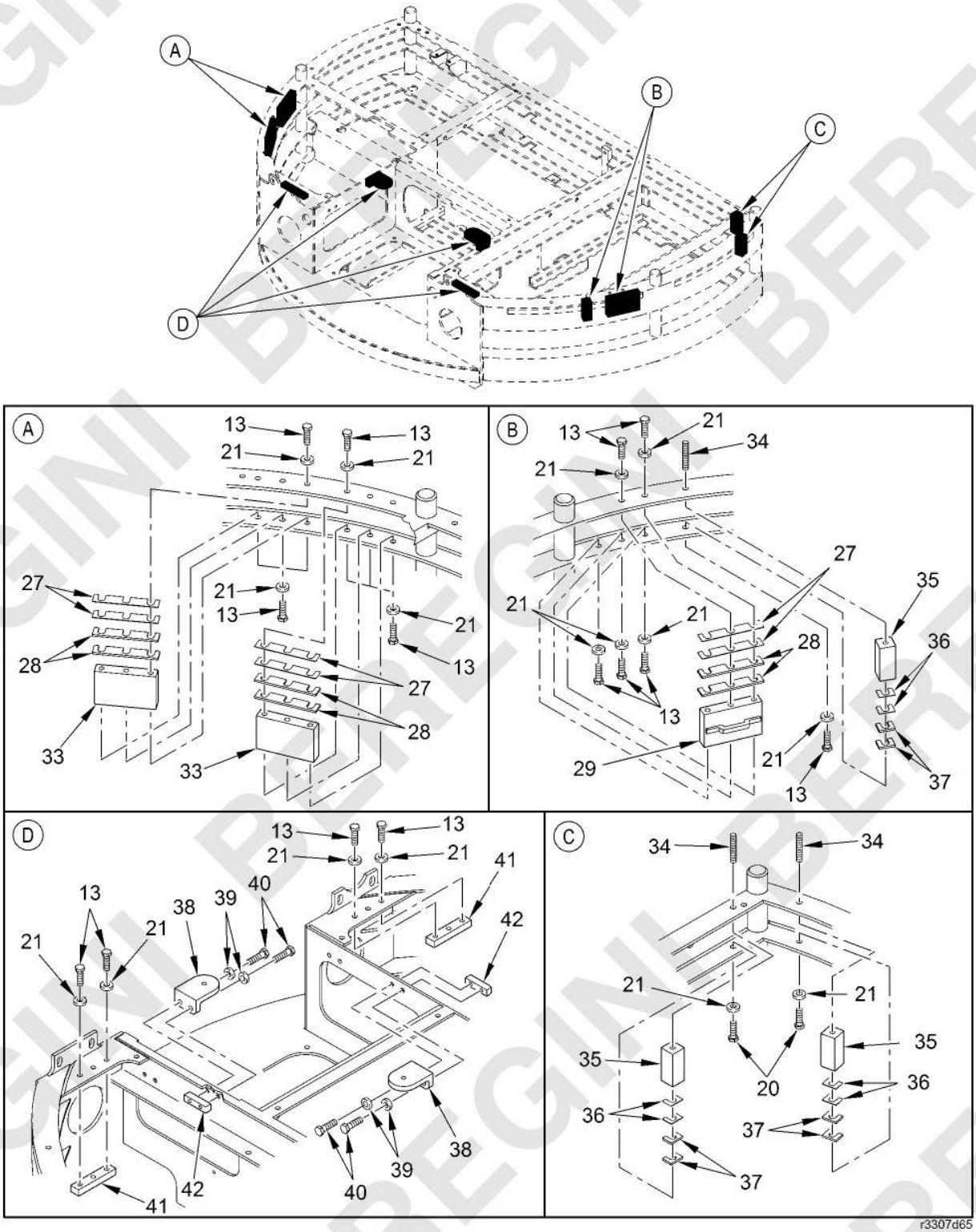

Figure 179. Basket Installation (BUSK III) (FTAA) - 12956686-1
(Sheet 4 of 6)

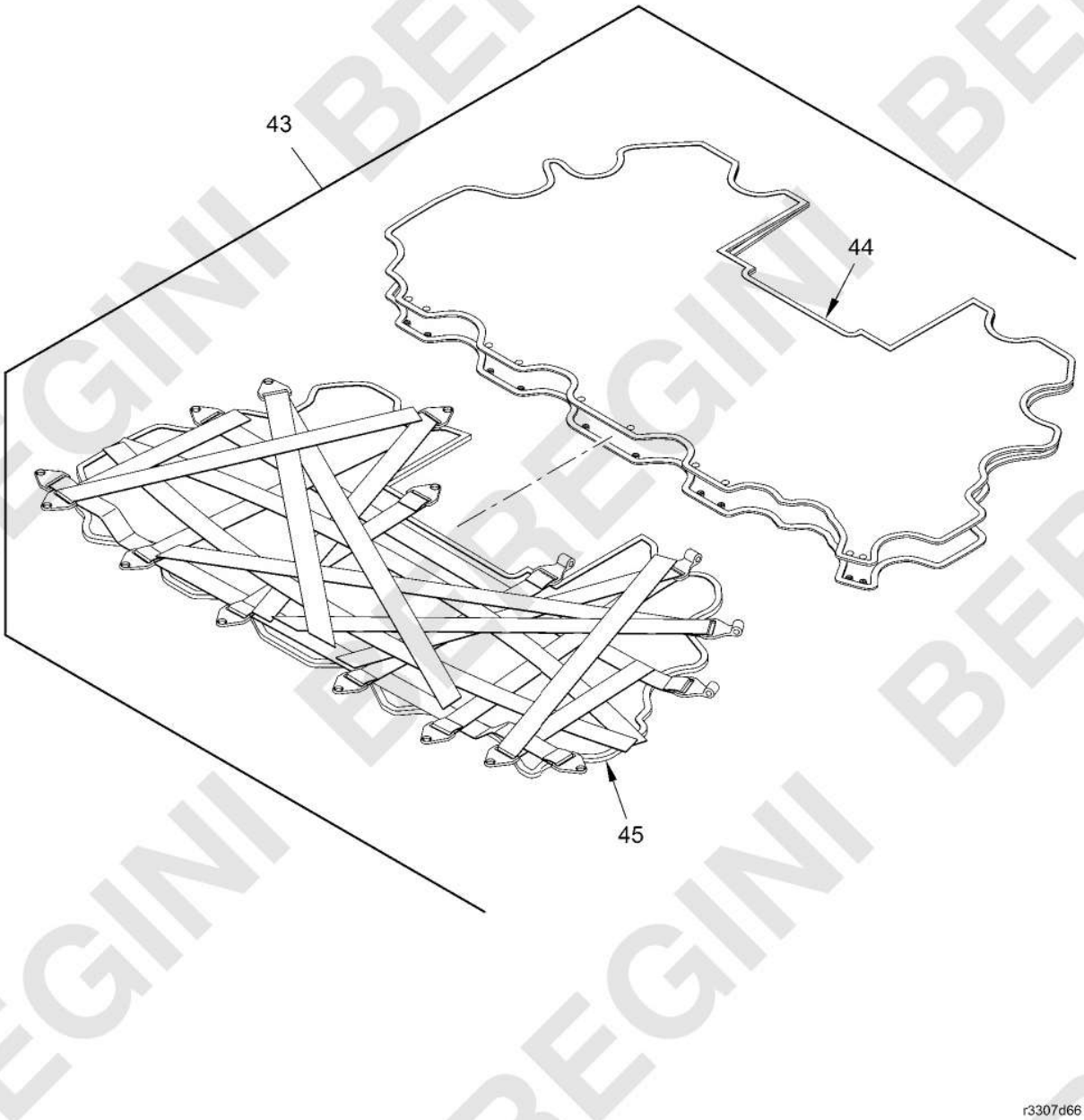

Figure 179. Basket Installation (BUSK III) (FTAA) - 12956686-1
(Sheet 5 of 6)

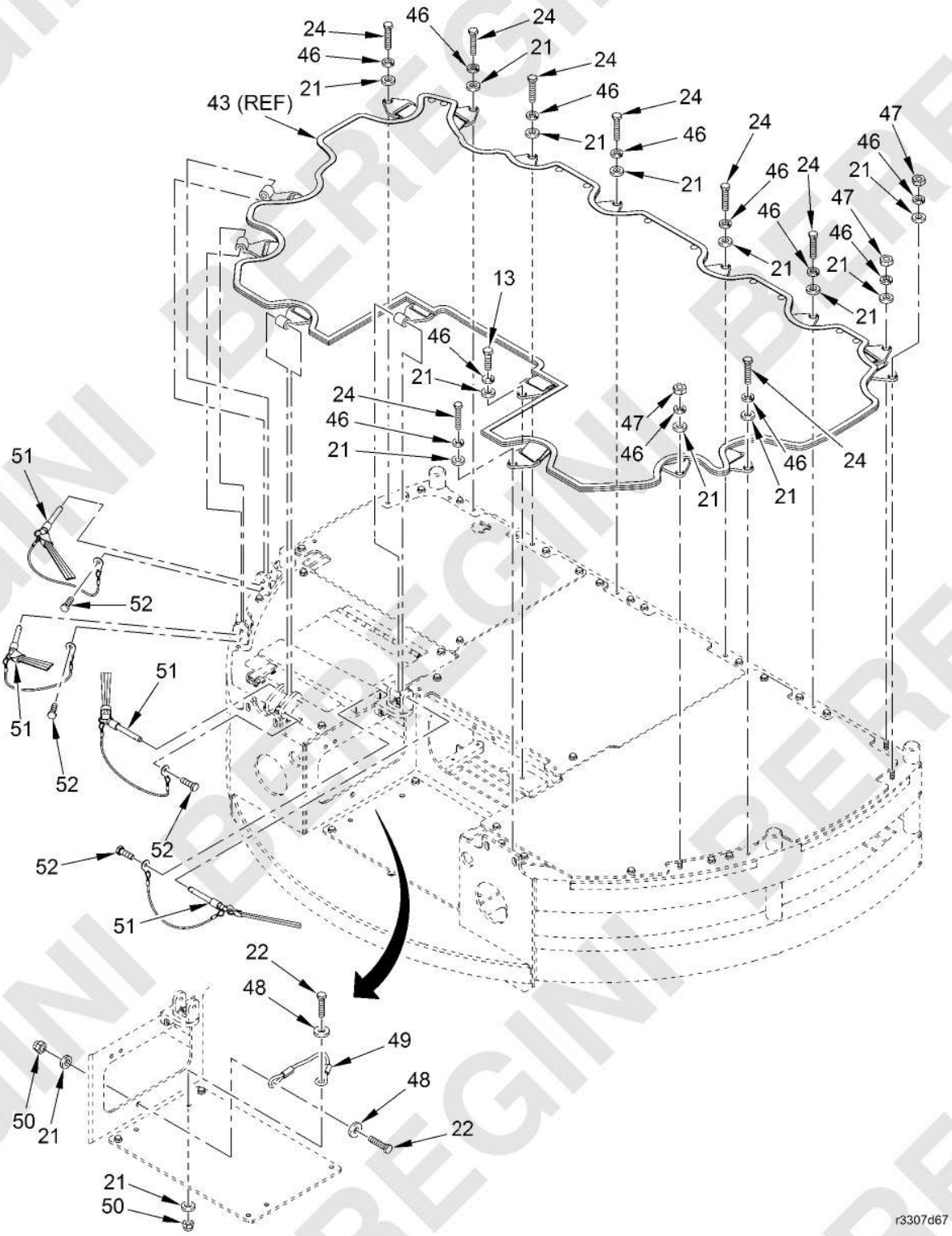

Figure 179. Basket Installation (BUSK III) (FTAA) - 12956686-1
(Sheet 6 of 6)

(1) ITEM NO.	(2) SMR CODE	(3) NSN	(4) CAGEC	(5) PART NUMBER	(6) DESCRIPTION AND USABLE ON CODE (UOC)	(7) QTY
					GROUP FTAA BASKET INSTALLATION	
					FIGURE 179 Basket Installation (BUSK III) (FTAA) - 12956686-1	
1	PAFZZ	5310-00-080-6004	96906	MS27183-14	WASHER,FLAT	6
2	PAFZZ	5305-00-543-4372	05047	AES01C375750AW9A91	SCREW,CAP,HEXAGON H	2
3	PAFZZ	5305-00-721-5492	05047	AES01C375625AW9A91	SCREW,CAP,HEXAGON H	2
4	PAFZZ	5310-00-061-1258	96906	MS45904-76	WASHER,LOCK	4
5	PAFZZ	5940-01-115-3264	19207	12294837	TERMINAL STRIP,GROU	1
6	PAFZZ	1005-01-113-3766	19207	12295200	SUPPORT,AMMUNITION	1
7	PAFZZ	5340-01-126-7835	19207	12307240	BRACKET,ANGLE	1
8	PAFZZ	5325-00-174-2882	80020	49955-22L	STUD,SNAP FASTENER	1
9	PAFZZ	5310-00-902-6676	80205	MS21083N3	NUT,SELF-LOCKING,HE	1
10	XBFFF		19200	12956634-80	BASKET,WEAPON STATI	1
11	PAFZZ	5310-00-809-5998	96906	MS27183-18	WASHER,FLAT	4
12	PAFZZ	5305-00-071-2071	05047	AES02C500B00AW9A81	SCREW,CAP,HEXAGON H	4
13	PAFZZ	5305-00-068-0510	80204	B1821BH038C100N	SCREW,CAP,HEXAGON H	4
14	PAFZZ	5305-00-225-3843	80204	B1821BH025C100N	SCREW,CAP,HEXAGON H	17
15	PAFZZ	5310-00-395-3602	19200	10910174-34	WASHER,FLAT	28
16	PAFZZ	9535-01-593-9658	19200	13024518	FLOOR PLATE,LF	1
17	PAFZZ	9535-01-598-1375	19200	13023414	FLOOR PLATE,CENTER	1
18	PAFZZ	9535-01-600-2855	19200	13023413	FLOOR PLATE,RIGHT	1
19	PAFZZ	2510-01-593-9652	19200	13023419	PLATE,STEP	1
20	PAFZZ	5340-01-593-9672	19200	13024549	CLEVIS	1
21	PAFZZ	5310-00-877-5972	19200	10910174-3	WASHER,FLAT	74
22	PAFZZ	5305-00-068-0511	05047	AES01C375A25AZ0A86	SCREW,CAP,HEXAGON H	13
23	PAFZZ	5340-01-593-9664	19200	13024548	BRACKET,QUICK REL	1
24	PAFZZ	5305-00-725-2317	05047	AES01C375A50AW9A91	SCREW,CAP,HEXAGON H	13
25	PAFZZ	5340-01-593-9668	19200	13024547	CLEVIS	1
26	PAFZZ	9535-01-598-1372	19200	13023412	FLOOR PLATE,LR	1
27	PAFZZ	5365-01-590-7692	19200	13024545-3	SHIM	14
28	PAFZZ	5365-01-593-9678	19200	13024544-3	SHIM	14
29	PAFZZ	2590-01-595-6682	19200	13023415	BLOCK,TRIPLE HOLE	2
30	PAFZZ	5365-01-593-9675	19200	13024545-2	SHIM	4

(1) ITEM NO.	(2) SMR CODE	(3) NSN	(4) CAGEC	(5) PART NUMBER	(6) DESCRIPTION AND USABLE ON CODE (UOC)	(7) QTY
31	PAFZZ	2590-01-595-6729	19200	13024527	BLOCK,DOUBLE HOLE	2
32	PAFZZ	5365-01-590-7685	19200	13024544-2	SHIM	4
33	PAFZZ	2590-01-595-6690	19200	13023418	BLOCK,TRIPLE HOLE	5
34	PAFZZ	5307-01-605-9861	80205	NAS1454C6A-0200	STUD,CONTINUOUS,THR	3
35	PAFZZ	2590-01-595-6757	19200	13023411	BLOCK,SINGLE HOLE	3
36	PAFZZ	5365-01-590-7689	19200	13024545-1	SHIM	6
37	PAFZZ	5365-01-593-9679	19200	13024544-1	SHIM	6
38	PAFZZ	5340-01-598-1384	19200	13023417	BRACKET,ANGLE	2
39	PAFZZ	5310-00-877-5973	19200	10910174-2	WASHER,FLAT	8
40	PAFZZ	5306-00-226-4830	80204	B1821BH031C138N	SCREW,CAP,HEXAGON H	4
41	PAFZZ	5310-01-596-1255	19200	13024526	NUT STRIP	2
42	PAFZZ	5310-01-596-1236	19200	13023416	NUT STRIP	2
43	PAFFF	2540-01-595-6736	19200	13023407-2	BLANKET ASSY	1
43	PAFFF	2540-01-595-6743	19200	13023407-1	BLANKET ASSEMBLY TY	1
44	PAFZZ	2540-01-615-4572	3KHA7	112-000006-014	.COVER USED ON 13023407-1	1
44	PAFZZ	2510-01-616-8980	45402	1110012-103	.COVER,TURRET BASE USED ON 13023407-2	1
45	XAFZZ		3KHA7	112-000006-010	.LOAD BEARING USED ON 13023407-1	1
45	XAFZZ		45402	1110012-101	.LOAD BEARING USED ON 13023407-2	1
46	PAFZZ	5310-00-984-7042	80205	MS35338-141	WASHER,LOCK	12
47	PAFZZ	5310-01-593-9654	19200	13023391-8	NUT,PLAIN,HEXAGON	3
48	PAFZZ	5310-00-987-1294	19207	10910174-16	WASHER,FLAT	2
49	PAFZZ	4010-01-590-7625	19200	13024523	ROPE,WIRE	1
50	PAFZZ	5310-01-358-7622	80205	MS17829Z6C	NUT,SELF-LOCKING,HE	2
51	PAFZZ	5315-01-595-3905	19200	13024551	PIN,QUICK REL ASSY	4
52	PAFZZ	5305-00-071-2508	05047	AES01C250378AW9A91	SCREW,CAP,HEXAGON H	4
					END OF FIGURE	

BEREGINI BEREGINI BEREGINI

MAINTAINER

BASKET, WEAPON STATION (FTAAA) - 12956634 (PRE-BUSK III), 12956634-80 (BUSK III)

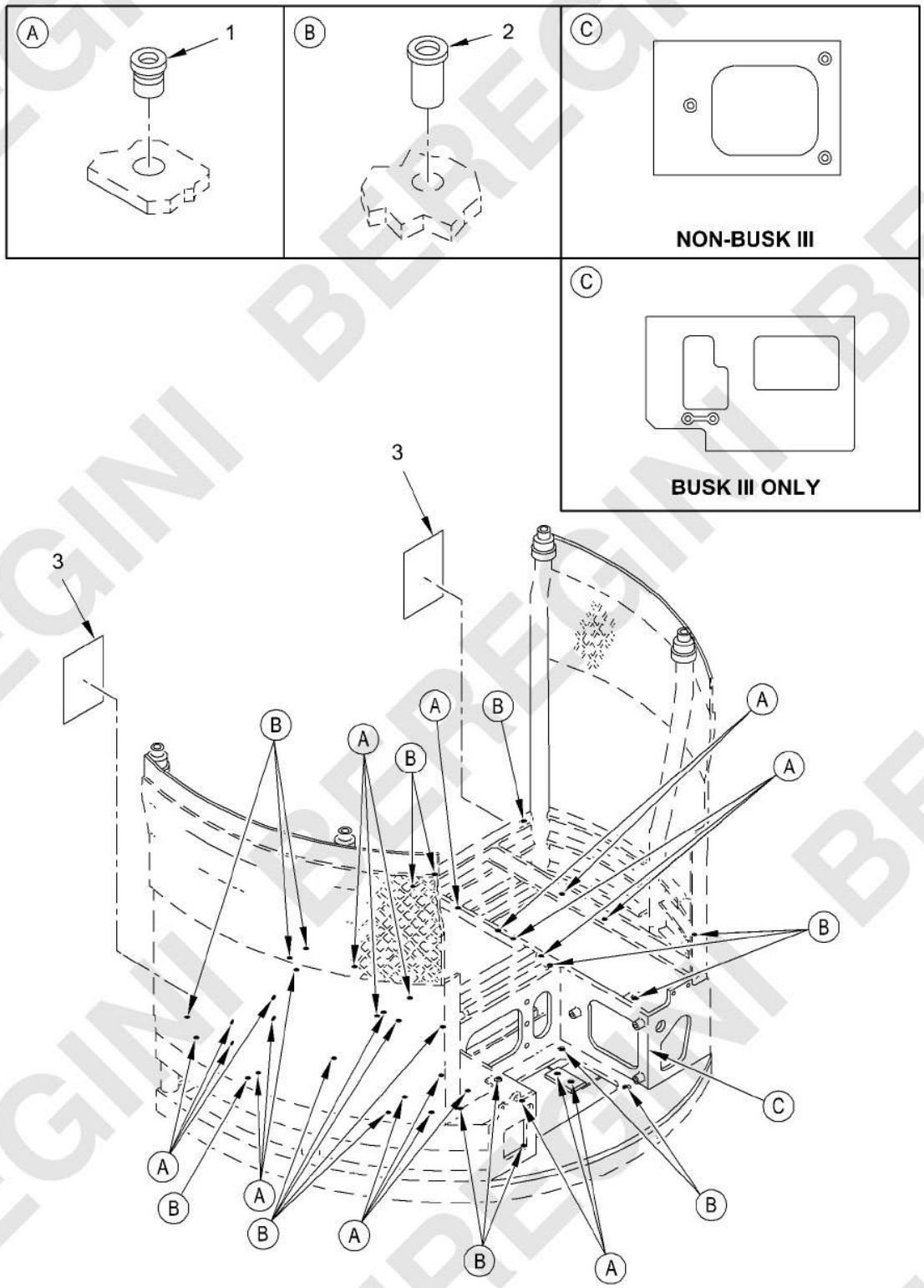

Figure 180. Basket, Weapon Station (FTAAA) - 12956634 (Pre-BUSK III), 12956634-80 (BUSK III)

(1) ITEM NO.	(2) SMR CODE	(3) NSN	(4) CAGEC	(5) PART NUMBER	(6) DESCRIPTION AND USABLE ON CODE (UOC)	(7) QTY
					GROUP FTAAA WEAPON STATION BASKET	
					FIGURE 180 Basket, Weapon Station (FTAAA) - 12956634 (Pre-BUSK III), 12956634-80 (BUSK III)	
1	PAFZZ	5325-00-930-1615	83324	CR108SB10	INSERT,SCREW THREAD	23
2	PAFZZ	5310-01-108-8404	80205	NAS1329S4E-260	NUT,PLAIN,BLIND RIV	20
3	PAFZZ	9905-01-200-9249	19207	12350541	PLATE,INSTRUCTION	2
					END OF FIGURE	

BEREGINI BEREGINI BEREGINI

MAINTAINER

COMMANDERS HATCH (FTAB) - 12976502, 12933361

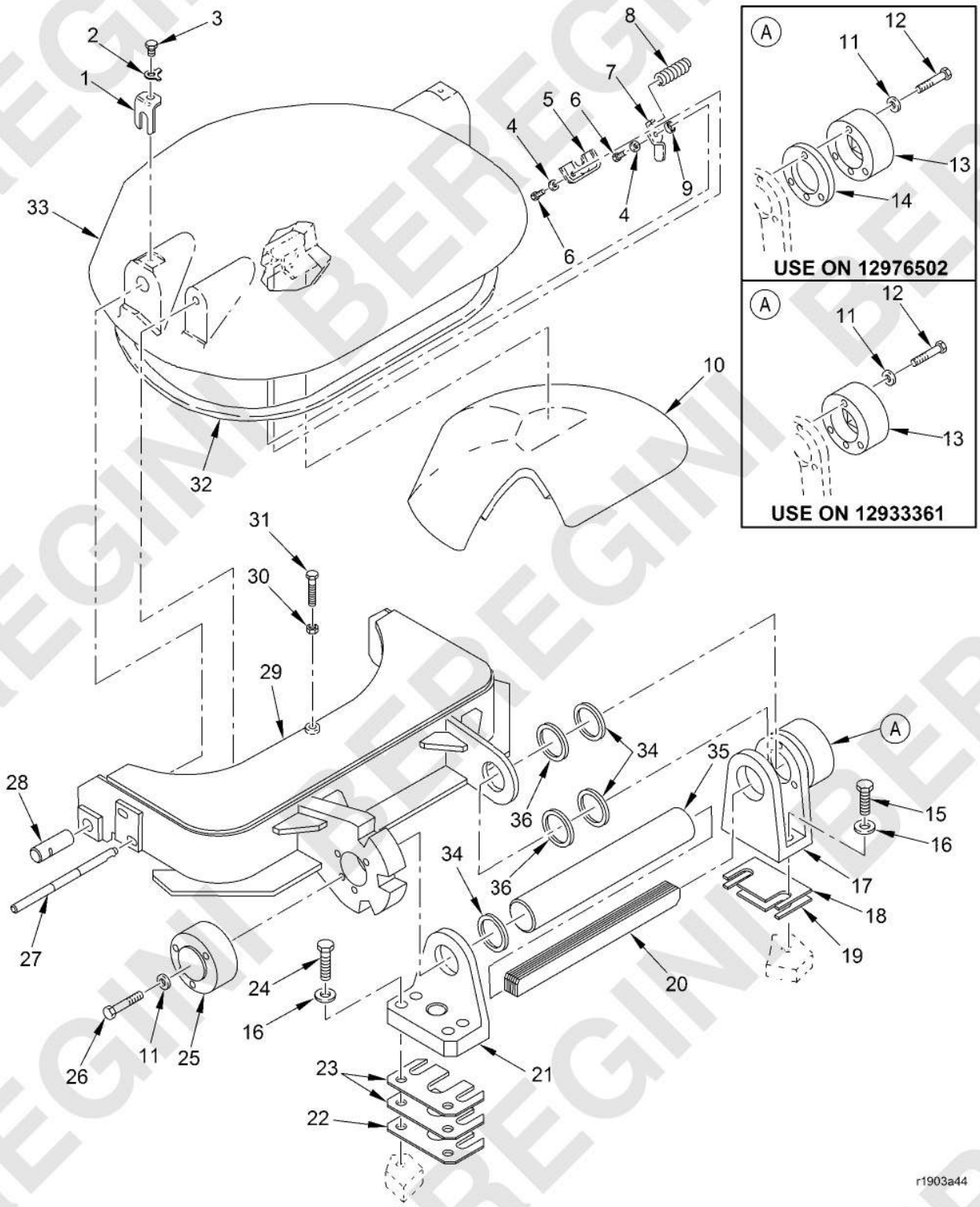

Figure 181. Commanders Hatch (FTAB) - 12976502, 12933361
(Sheet 1 of 2)

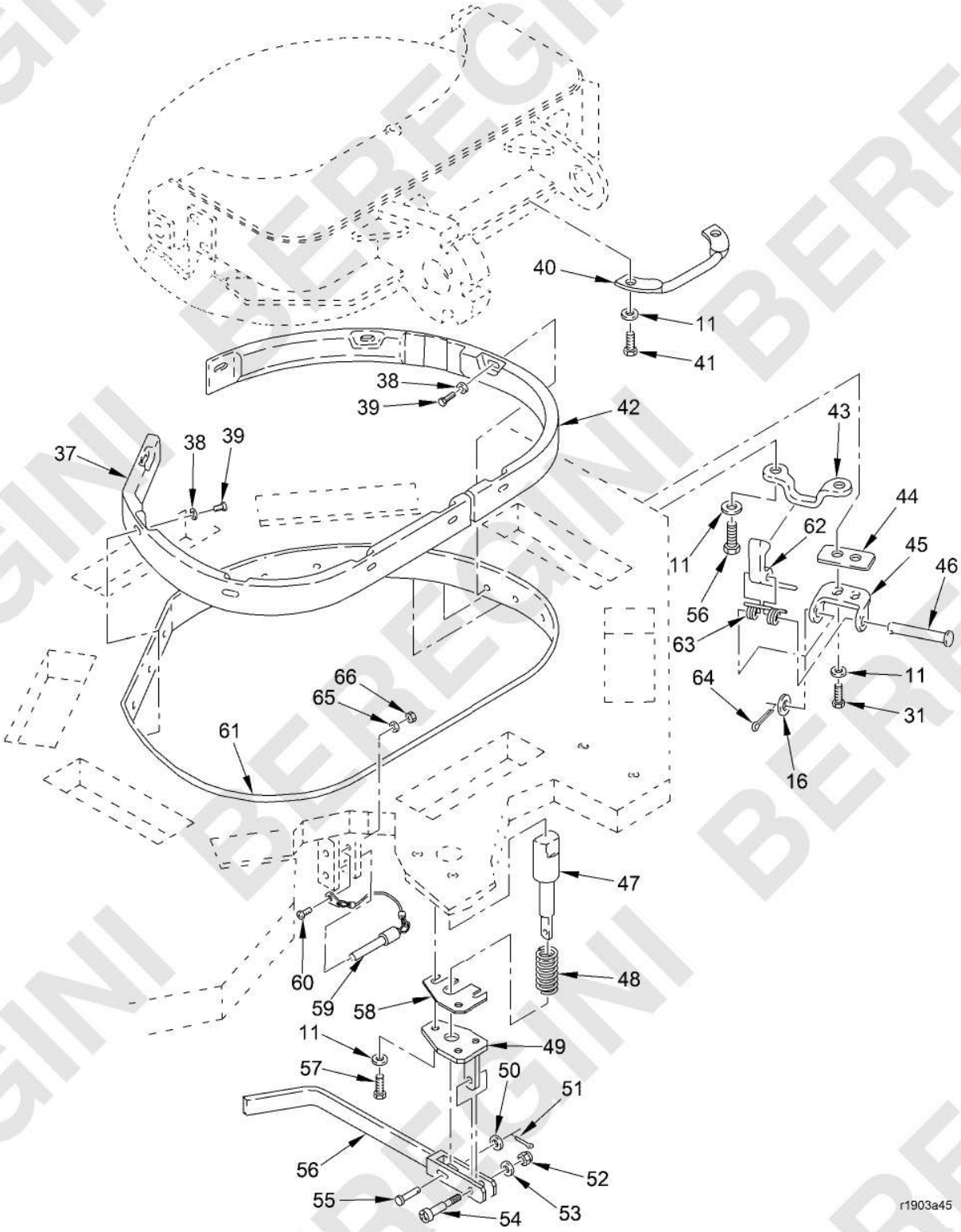

Figure 181. Commanders Hatch (FTAB) - 12976502, 12933361
(Sheet 2 of 2)

(1) ITEM NO.	(2) SMR CODE	(3) NSN	(4) CAGEC	(5) PART NUMBER	(6) DESCRIPTION AND USABLE ON CODE (UOC)	(7) QTY
					GROUP FTAB HATCHES	
					FIGURE 181 Commanders Hatch (FTAB) - 12976502, 12933361	
1	PAFZZ	5340-01-123-4980	19207	12294537	BRACKET,ANGLE	2
2	PAFZZ	5310-00-655-9668	19207	10863380	WASHER,KEY	2
3	PAFZZ	5305-01-517-5770	19200	12992070	SCREW,MACHINE	2
4	PAFZZ	5310-00-877-5972	19200	10910174-3	WASHER,FLAT	3
5	PAFZZ	5340-01-376-0654	19207	12933392	COVER,ACCESS	1
6	PAFZZ	5305-00-984-5689	96906	MS35206-309	SCREW,MACHINE	3
7	PAFZZ	5340-01-535-7259	19200	12933390-1	LEVER,MANUAL CONTRO	1
8	PAFZZ	5360-01-375-2883	19200	12933391	SPRING,HELICAL,COMP	1
9	PAFZZ	5365-01-374-8413	19200	12933389	SPACER,SLEEVE	1
10	PAFZZ	2590-01-375-1642	80212	12933399	PAD,CUSHIONING	1
11	PAFZZ	5310-00-728-9957	19207	10910174-22	WASHER,FLAT USED ON 12933361 UOC: BSA	19
11	PAFZZ	5310-00-728-9957	19207	10910174-22	WASHER,FLAT USED ON 12976502 UOC: [redacted]	15
12	PAFZZ	5306-01-330-9744	80204	B1821BH038C300L	BOLT,MACHINE	4
13	PAFZZ	5340-01-381-9924	19207	12933429-1	HOLDER,SPRING	1
14	PAFZZ	5365-01-482-1538	19200	12986344	SPACER,RING USED ON 12976502 UOC: [redacted]	1
15	PAFZZ	5305-00-071-2071	05047	AES02C500B00AW9A81	SCREW,CAP,HEXAGON H	2
16	PAFZZ	5310-00-927-9400	19200	10910174-30	WASHER,FLAT	7
17	PAFZZ	2510-01-440-0022	19207	12307272-4	HINGE,HATCH,VEHICUL	1
18	PAFZZ	5365-01-109-4785	19207	12294608-1	SPACER,PLATE	1
19	PAFZZ	5365-01-109-4786	19207	12294608-2	SPACER,PLATE	1
20	PAFZZ	5360-01-440-4888	19207	12384925-10	SPRING,LEAF	10
21	PAFZZ	5340-01-109-1575	19207	12307271	HINGE,ACCESS DOOR	1
22	PAFZZ	5365-01-107-2562	19207	12307261	SPACER,PLATE	1
23	PAFZZ	5365-01-227-7092	19207	12307261-1	SPACER,PLATE	2
24	PAFZZ	5305-00-071-2073	05047	AES01C500B50AW9A91	SCREW,CAP,HEXAGON H	4
25	PAFZZ	5340-01-393-9940	19200	12933429-2	HOLDER,SPRING	1
26	PAFZZ	5306-01-144-3080	80204	B1821BH038C225L	BOLT,MACHINE	4
27	PAFZZ	5315-01-374-9503	19207	12933388	PIN,SHOULDER,HEADLE	1
28	PAFZZ	5315-01-517-5741	19200	12992066	PIN,GROOVED,HEADED	2

(1) ITEM NO.	(2) SMR CODE	(3) NSN	(4) CAGEC	(5) PART NUMBER	(6) DESCRIPTION AND USABLE ON CODE (UOC)	(7) QTY
29	PAFZZ	5340-01-517-5759	19200	12992069	BRACKET,MOUNTING USED ON 12976502 UOC: [redacted]	1
29	PAFZZ	1005-01-532-6153	19200	12995060	BRACKET,MOUNTING USED ON 12933361 UOC: BSA	1
30	PAFZZ	5310-00-851-2682	96906	MS35691-17	NUT,PLAIN,HEXAGON	1
31	PAFZZ	5305-00-068-0511	05047	AES01C375A25AZ0A86	SCREW,CAP,HEXAGON H	3
32	PAFZZ	5330-01-206-3415	19207	12328720-2	SEAL,NONMETALLIC SP	1
33	PBFZZ	2510-01-374-9700	19200	12933367	DOOR,HATCH,VEHICLE	1
34	PAFZZ	5365-01-129-5751	19207	12307267-1	SPACER,RING	7
35	PAFZZ	5365-01-107-2558	19207	12307268	SPACER,SLEEVE	1
36	PAFZZ	5365-01-107-2961	19207	12307267-2	SPACER,RING UOC: [redacted]	5
37	PAFZZ	5340-01-129-6090	19207	12308187	PAD,CUSHIONING	1
38	PAFZZ	5310-01-274-3255	96906	MS27183-52	WASHER,FLAT	8
39	PAFZZ	5305-00-988-1725	80205	MS35206-281	SCREW,MACHINE	8
40	PAFZZ	5340-01-376-1858	19207	12933398	HANDLE,BOW	1
41	PAFZZ	5305-00-543-4372	05047	AES01C375750AW9A91	SCREW,CAP,HEXAGON H	2
42	PAFZZ	5340-01-129-6091	19207	12308188	PAD,CUSHIONING	1
43	PAFZZ	5340-01-112-5149	19207	12294538	STRIKE,CATCH	1
44	PAFZZ	5365-01-208-0632	19207	12328659	SPACER,PLATE	2
45	PAFZZ	3040-00-781-8550	19207	10875319	BRACKET,EYE,NONROTA	1
46	PAFZZ	5315-00-904-0912	96906	MS20392-7C101	PIN,STRAIGHT,HEADED	1
47	PAFZZ	5315-01-474-3125	19200	12987586	PIN,SHOULDER,HEADLE	1
48	PAFZZ	5360-01-227-7076	19200	9379801	SPRING,HELICAL,COMP	1
49	PAFZZ	5340-01-107-5646	19207	12307269	BRACKET,T	1
50	PAFZZ	5310-00-395-3602	19200	10910174-34	WASHER,FLAT	1
51	PAFZZ	5315-00-839-5820	80205	MS24665-134	PIN,COTTER	1
52	PAFZZ	5310-00-984-3806	81349	M45913/1-5CG5C	NUT,SELF-LOCKING,HE	1
53	PAFZZ	5310-01-254-1377	19207	10910174-17	WASHER,FLAT	1
54	PAFZZ	5305-00-881-0705	80205	MS51975-17	SCREW,SHOULDER	1
55	PAFZZ	5315-00-081-7875	80205	MS20392-3C25	PIN,STRAIGHT,HEADED	1
56	PAFZZ	5340-01-107-3844	19207	12307270	HANDLE,DOOR	1
57	PAFZZ	5305-00-068-0510	80204	B1821BH038C100N	SCREW,CAP,HEXAGON H	5
58	PAFZZ	5365-01-171-2840	19207	12307384	SPACER,PLATE	3

(1) ITEM NO.	(2) SMR CODE	(3) NSN	(4) CAGEC	(5) PART NUMBER	(6) DESCRIPTION AND USABLE ON CODE (UOC)	(7) QTY
59	PAFZZ	5315-01-255-2267	19200	12297780-6	PIN,QUICK RELEASE	1
60	PAFZZ	5305-00-993-1848	80205	MS35207-265	SCREW,MACHINE	1
61	PAFZZ	2590-01-126-7812	19207	12294483	MOLDING,METAL	1
62	PAFZZ	5340-01-110-3459	19207	12294497	LEVER,MANUAL CONTRO	1
63	PAFZZ	5360-00-715-9282	19207	10875320	SPRING,HELICAL,TORS	1
64	PAFZZ	5315-01-359-1451	80205	MS24665-285	PIN,COTTER	1
65	PAFZZ	5310-00-865-9513	19207	10910174-1	WASHER,FLAT	1
66	PAFZZ	5310-00-877-5797	80205	MS21044N3	NUT,SELF-LOCKING,HE	2
					END OF FIGURE	

MAINTAINER

GUNNERS HATCH (FTAB) - 12976502, 12933361

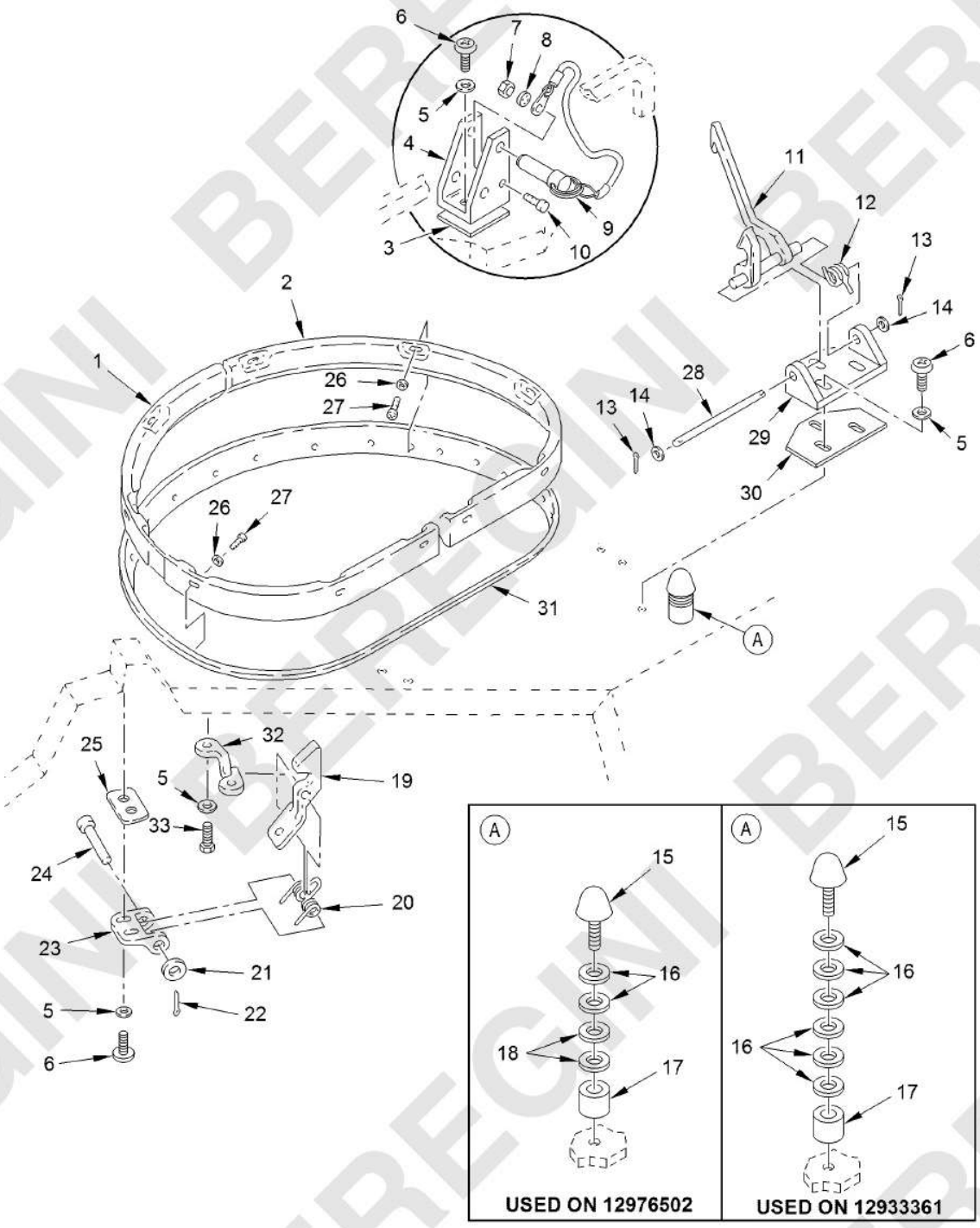

Figure 182. Gunners Hatch (FTAB) - 12976502, 12933361
(Sheet 1 of 2)

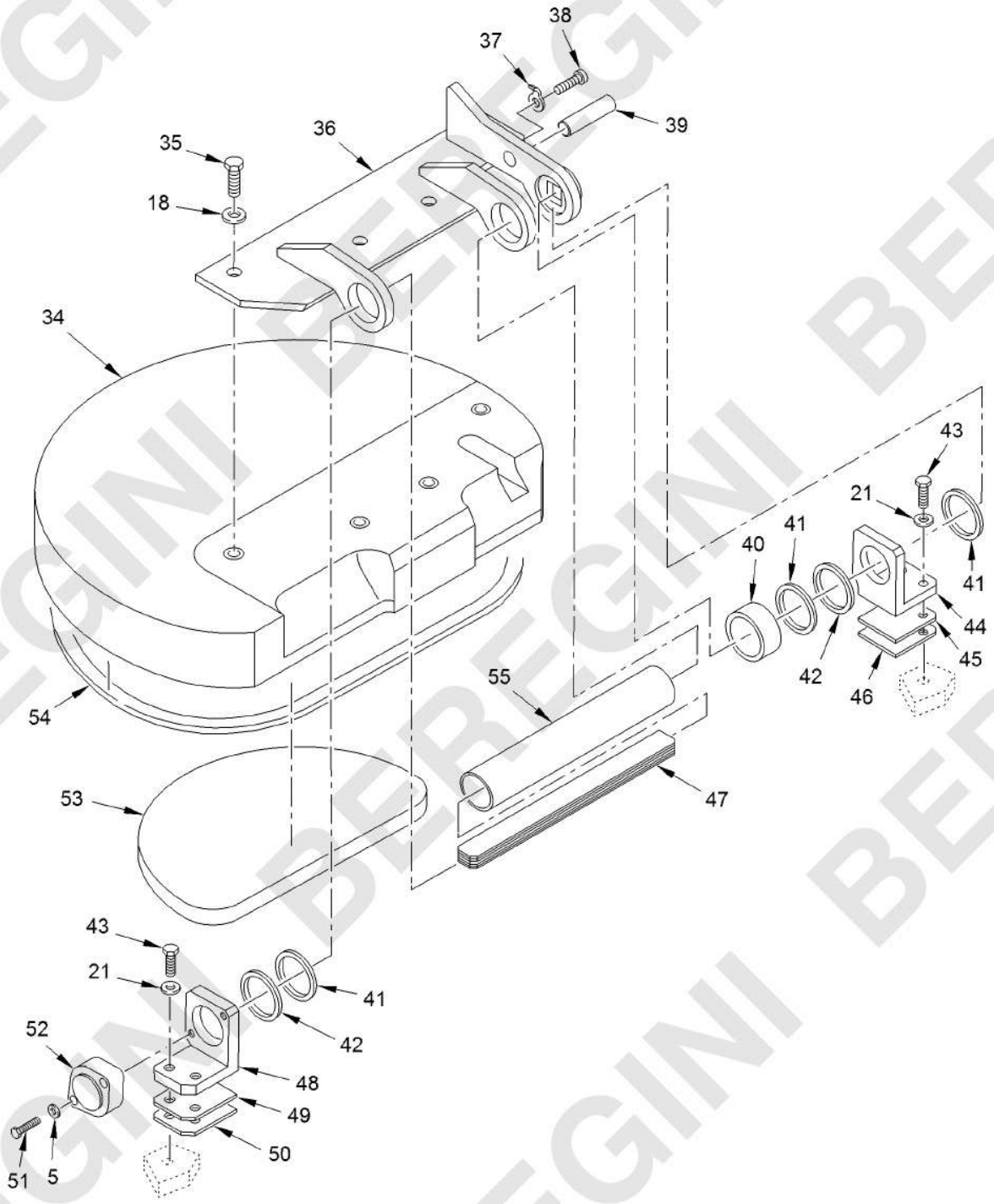

Figure 182. Gunners Hatch (FTAB) - 12976502, 12933361
(Sheet 2 of 2)

(1) ITEM NO.	(2) SMR CODE	(3) NSN	(4) CAGEC	(5) PART NUMBER	(6) DESCRIPTION AND USABLE ON CODE (UOC)	(7) QTY
					GROUP FTAB HATCHES	
					FIGURE 182 Gunners Hatch (FTAB) - 12976502, 12933361	
1	PAFZZ	5340-01-129-6089	19207	12308189	PAD,CUSHIONING	1
2	PAFZZ	5340-01-129-6088	19207	12308186	PAD,CUSHIONING	1
3	PAFZZ	5365-01-107-7569	19207	12298267	SPACER,PLATE	2
4	PAFZZ	5340-01-256-9656	19200	9379648	BRACKET,DOUBLE ANGL	1
5	PAFZZ	5310-00-728-9957	19207	10910174-22	WASHER,FLAT UOC: [redacted]	13
6	PAFZZ	5305-00-068-0511	05047	AES01C375A25AZ0A86	SCREW,CAP,HEXAGON H	7
7	PAFZZ	5310-00-877-5797	80205	MS21044N3	NUT,SELF-LOCKING,HE	2
8	PAFZZ	5310-00-865-9513	19207	10910174-1	WASHER,FLAT	2
9	PAFZZ	5315-01-255-2268	19200	12297780-5	PIN,QUICK RELEASE	1
10	PAFZZ	5305-00-993-1848	80205	MS35207-265	SCREW,MACHINE	2
11	PAFZZ	5340-01-227-7071	19200	9379834	HANDLE,MANUAL CONTR	1
12	PAFZZ	5360-01-101-6493	19207	12307264	SPRING,HELICAL,TORS	1
13	PAFZZ	5315-00-012-0123	80205	MS24665-355	PIN,COTTER	3
14	PAFZZ	5310-01-103-2587	19200	10910174-31	WASHER,FLAT	3
15	PAFZZ	5340-00-679-9211	19207	8756888	BUMPER,NONMETALLIC	1
16	PAFZZ	5310-01-104-9035	19204	10910174-38	WASHER,FLAT USED ON 12976502 UOC: [redacted]	2
16	PAFZZ	5310-01-104-9035	19204	10910174-38	WASHER,FLAT USED ON 12933361 UOC: BSA	6
17	PAFZZ	5365-01-107-2559	19207	12294517	SPACER,SLEEVE	1
18	PAFZZ	5310-01-094-9031	19207	10910174-24	WASHER,FLAT USED ON 12933361 UOC: [redacted]	4
18	PAFZZ	5310-01-094-9031	19207	10910174-24	WASHER,FLAT USED ON 12976502 UOC: BSA	6
19	PAFZZ	5340-01-110-3459	19207	12294497	LEVER,MANUAL CONTRO	2
20	PAFZZ	5360-00-715-9282	19207	10875320	SPRING,HELICAL,TORS	2
21	PAFZZ	5310-00-927-9400	19200	10910174-30	WASHER,FLAT	5
22	PAFZZ	5315-01-359-1451	80205	MS24665-285	PIN,COTTER	2
23	PAFZZ	3040-00-781-8550	19207	10875319	BRACKET,EYE,NONROTA	2
24	PAFZZ	5315-00-904-0912	96906	MS20392-7C101	PIN,STRAIGHT,HEADED	2
25	PAFZZ	5365-01-208-0632	19207	12328659	SPACER,PLATE	3
26	PAFZZ	5310-01-274-3255	96906	MS27183-52	WASHER,FLAT	11

(1) ITEM NO.	(2) SMR CODE	(3) NSN	(4) CAGEC	(5) PART NUMBER	(6) DESCRIPTION AND USABLE ON CODE (UOC)	(7) QTY
27	PAFZZ	5305-00-988-1725	80205	MS35206-281	SCREW,MACHINE	11
28	PAFZZ	1005-01-107-5652	19207	12307263	HOOK,LATCH	1
29	PAFZZ	3040-01-119-1240	19207	12307266	BRACKET,EYE,ROTATIN	1
30	PAFZZ	5365-01-126-7828	19207	12307262	SPACER,PLATE	1
31	PAFZZ	1005-01-126-7813	19207	12294478	COAMING	1
32	PAFZZ	5340-01-112-5149	19207	12294538	STRIKE,CATCH	2
33	PAFZZ	5305-00-068-0510	80204	B1821BH038C100N	SCREW,CAP,HEXAGON H	2
34	PBFZZ	2510-01-439-9992	19200	12933622	HATCH,ROOF ASSEMBLY	1
35	PAFZZ	5305-00-947-4352	05047	AES01C750A25AW9A91	SCREW,CAP,HEXAGON H	4
36	PAFZZ	2590-01-439-9925	19200	12933621	BRACKET,VEHICULAR C	1
37	PAFZZ	5310-01-460-8846	19200	12982463	WASHER,KEY	1
38	PAFZZ	5305-00-988-1723	80205	MS35206-279	SCREW,MACHINE	1
39	PAFZZ	5315-01-440-0269	96906	MS16556-695	PIN,STRAIGHT,HEADLE	1
40	PAFZZ	5365-01-443-4447	19200	12933623	SPACER,SLEEVE	1
41	PAFZZ	5365-01-129-5751	19207	12307267-1	SPACER,RING	3
42	PAFZZ	5365-01-107-2961	19207	12307267-2	SPACER,RING USED ON 12976502 UOC: [redacted]	3
42	PAFZZ	5365-01-107-2961	19207	12307267-2	SPACER,RING USED ON 12933361 UOC: BSA	2
43	PAFZZ	5305-00-071-2070	80204	B1821BH050C175N	SCREW,CAP,HEXAGON H	4
44	PAFZZ	5340-01-109-6955	19207	12295084	HINGE,ACCESS DOOR	1
45	PAFZZ	5365-01-106-0913	19207	12307285-1	SPACER,PLATE	2
46	PAFZZ	5365-01-106-9916	19207	12307285-2	SPACER,PLATE	1
47	PAFZZ	5360-00-679-9190	19207	8756881	SPRING,LEAF	13
48	PAFZZ	5340-01-109-1574	19207	12294494	HINGE,ACCESS DOOR	1
49	PAFZZ	5365-01-109-7095	19207	12294607-1	SPACER,PLATE	2
50	PAFZZ	5365-01-108-4992	19207	12294607-2	SPACER,PLATE	1
51	PAFZZ	5305-00-725-2317	05047	AES01C375A50AW9A91	SCREW,CAP,HEXAGON H	2
52	PAFZZ	5340-01-372-3014	19200	9381068	RETAINER,HELICAL CO	1
53	PAFZZ	2590-01-379-9051	19200	9381072	PAD,CUSHIONING	1
54	PAFZZ	5330-01-206-3415	19207	12328720-2	SEAL,NONMETALLIC SP	2
55	PAFZZ	4710-01-174-5386	19207	12316998	TUBE,METALLIC	1

END OF FIGURE

MAINTAINER

INTERNAL HATCH RELEASE INSTL (FTABA) - 13007360

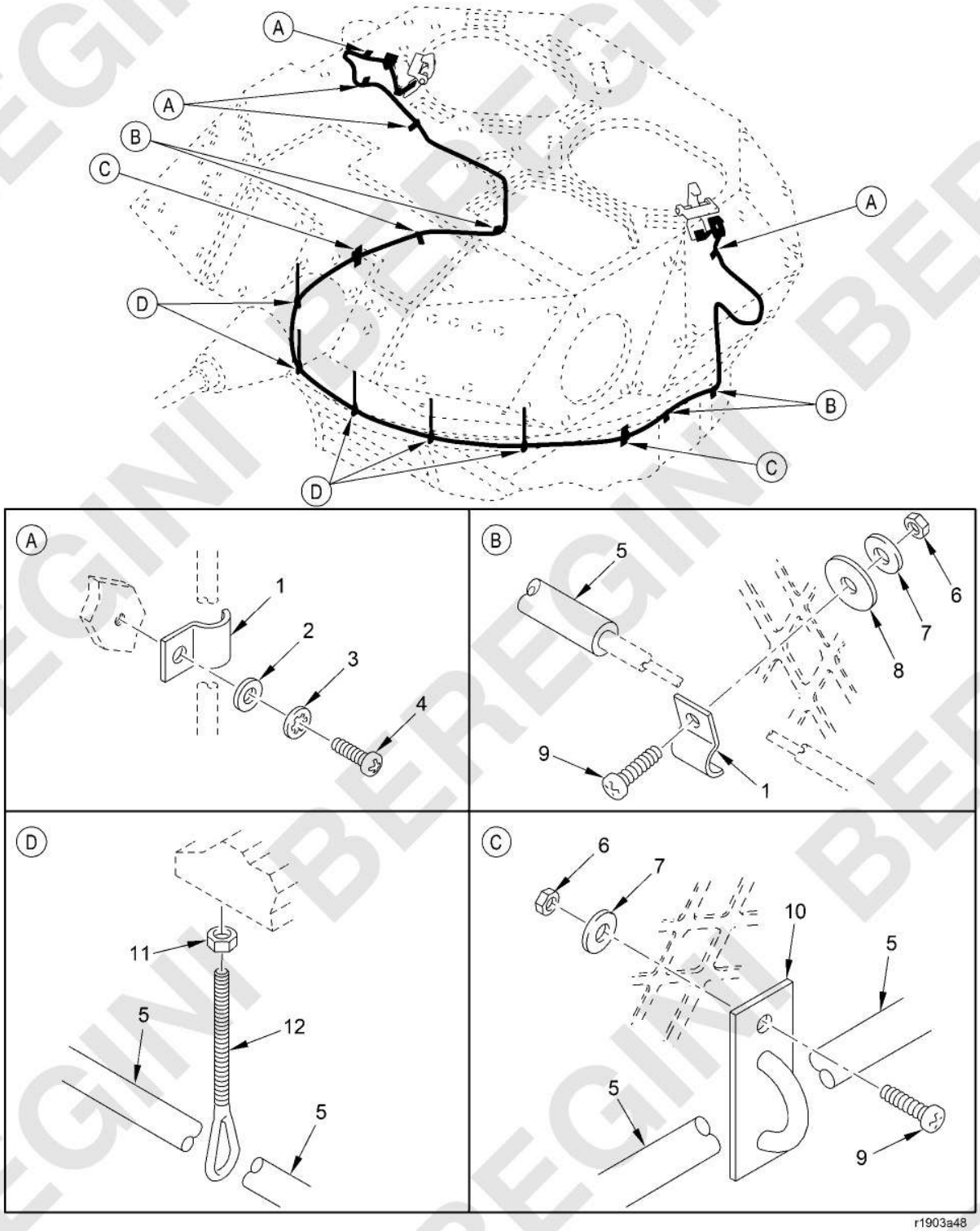

Figure 183. Internal Hatch Release Instl (FTABA) - 13007360
(Sheet 1 of 2)

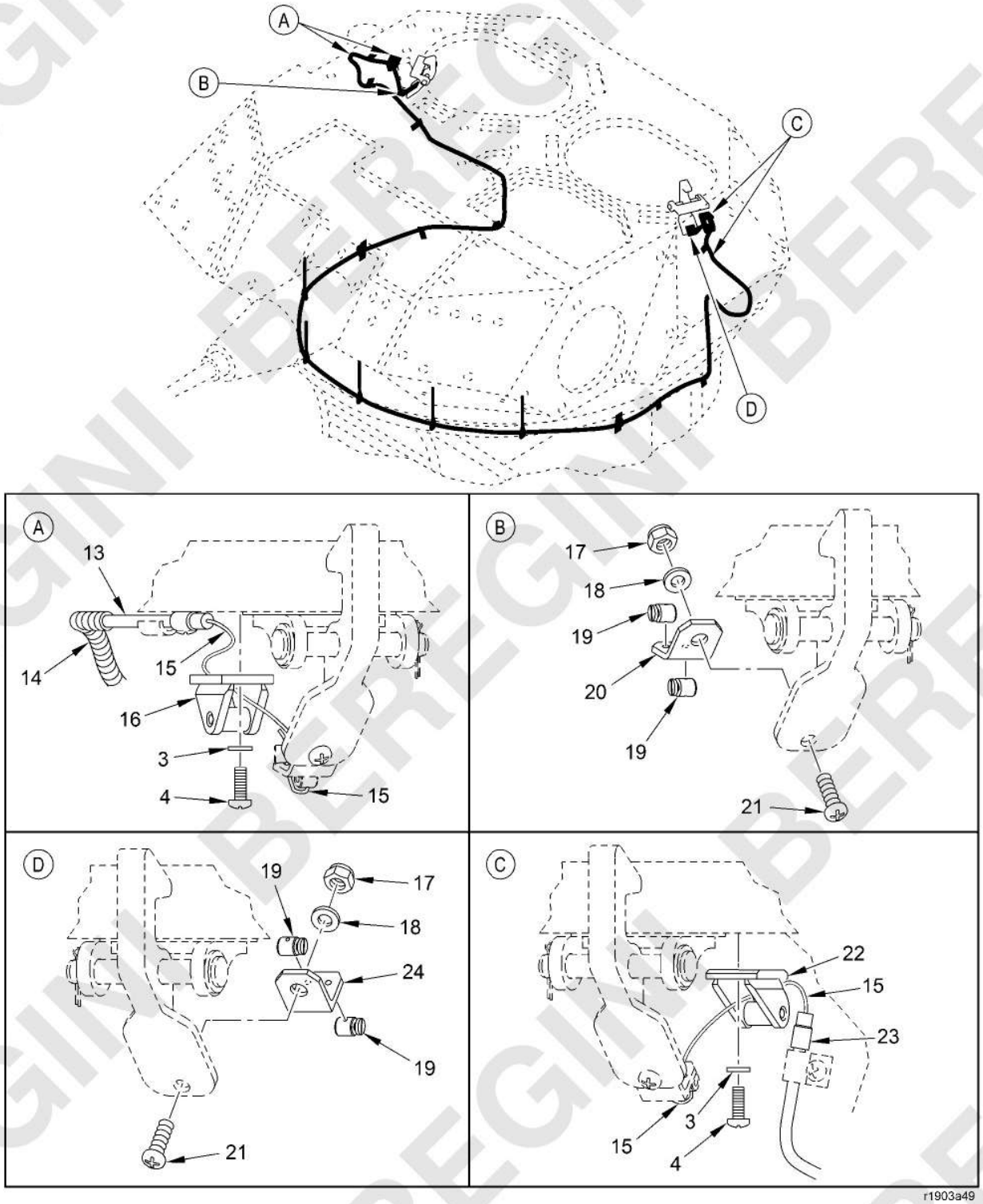

Figure 183. Internal Hatch Release Instl (FTABA) - 13007360
(Sheet 2 of 2)

(1) ITEM NO.	(2) SMR CODE	(3) NSN	(4) CAGEC	(5) PART NUMBER	(6) DESCRIPTION AND USABLE ON CODE (UOC)	(7) QTY
					GROUP FTABA HATCHES	
					FIGURE 183 Internal Hatch Release Instl (FTABA) - 13007360	
1	PAFZZ	5975-01-126-7820	19207	12307604	CONDUIT CLIP KIT	4
2	PAFZZ	5310-00-865-9513	19207	10910174-1	WASHER,FLAT	4
3	PAFZZ	5310-00-550-1130	80205	MS35333-40	WASHER,LOCK	7
4	PAFZZ	5305-00-988-1724	96906	MS35206-280	SCREW,MACHINE	7
5	MFFZZ		19200	13007360-1	HOSE,116.00 IN LG MAKE FROM HOSE P/N 12309272-17(19207)	1
6	PAFZZ	5310-00-088-1251	81349	M45913/1-4CG5Z	NUT,SELF-LOCKING,HE	4
7	PAFZZ	5310-00-058-1305	19207	10910174-20	WASHER,FLAT	4
8	PAFZZ	5310-01-147-5859	19200	10910174-40	WASHER,FLAT	4
9	PAFZZ	5305-00-225-3843	80204	B1821BH025C100N	SCREW,CAP,HEXAGON H	4
10	PAFZZ	5340-01-574-7571	19200	13015072-3	BRACKET,MOUNTING	2
11	PAFZZ	5310-00-851-2682	96906	MS35691-17	NUT,PLAIN,HEXAGON	5
12	PAFZZ	5306-00-933-0595	96906	MS27950-6	BOLT,EYE	5
13	PAFZZ	2590-01-126-7818	19207	12307590-2	CABLE ASSEMBLY,CNTL	1
14	MFFZZ		0AHP5	B47287-II-1/4-S4	TUBING,PLASTIC,SPIR MAKE FROM TUBING P/N B47287-II-1/4 (0AHP5)	3
15	PAFZZ	4010-01-588-2325	19200	9381046-3	STRAND,WIRE	1
16	PAFZZ	1005-01-126-7814	19207	12307591	ROLLER,SUPPORT	1
17	PAFZZ	5310-00-903-8282	80205	MS21083N4	NUT,SELF-LOCKING,HE	2
18	PAFZZ	5310-00-809-4058	96906	MS27183-10	WASHER,FLAT	2
19	PAFZZ	5342-01-126-7821	19207	12307603	COLLAR,CABLE STOP	4
20	PAFZZ	5340-01-574-9618	19200	13007357	BRACKET,ANGLE	1
21	PAFZZ	5305-00-993-2738	80205	MS35207-280	SCREW,MACHINE	2
22	PAFZZ	3110-01-575-7199	19200	13007359	ROLLER,SUPPORT	1
23	PAFZZ	6145-01-574-6696	19207	12307590-3	CABLE,RADIO FREQUEN	1
24	PAFZZ	5340-01-127-1422	19207	12307532	BRACKET,ANGLE	1
					END OF FIGURE	

MAINTAINER

TURRET ARMOR INSTL (FTAC) - 13024674

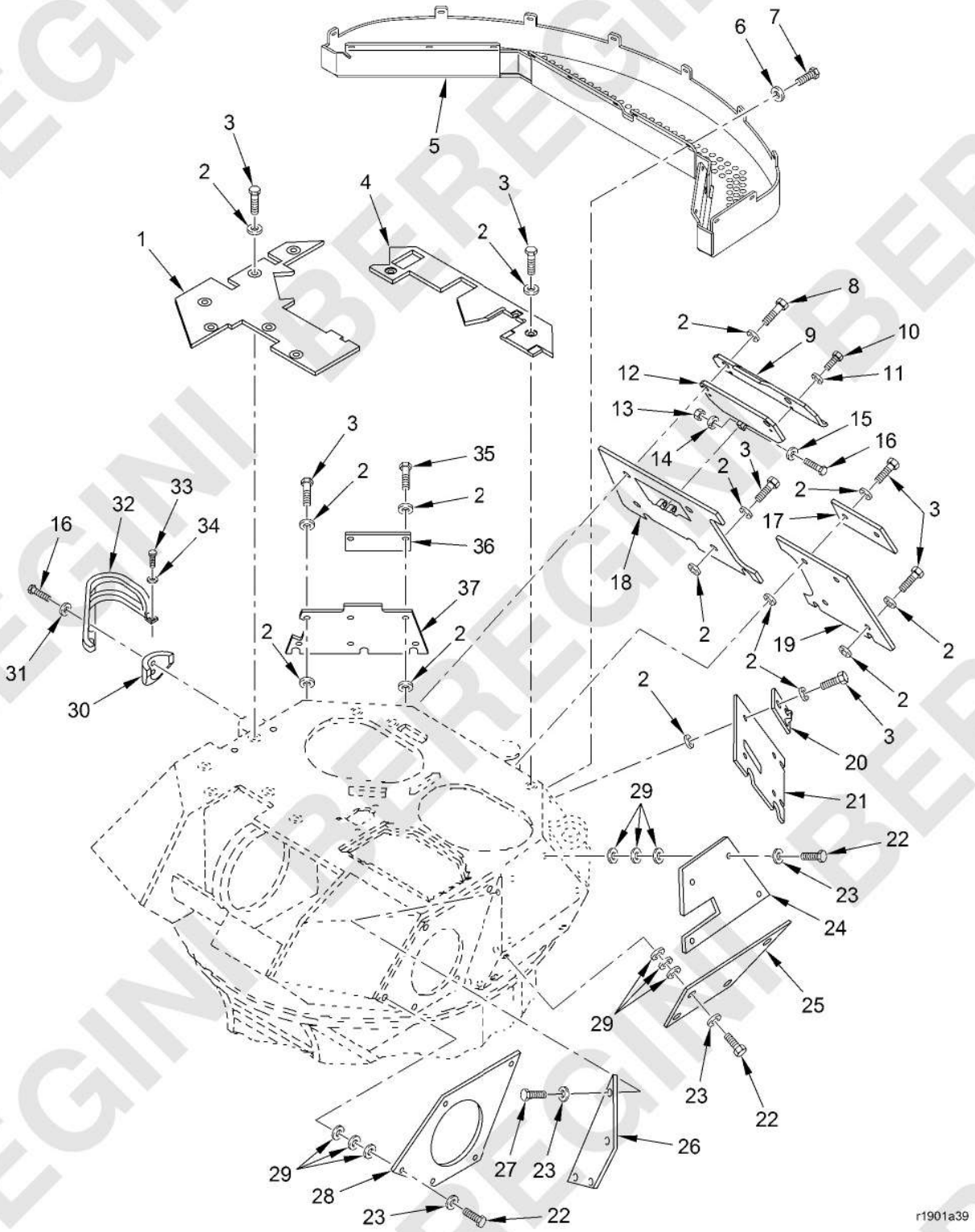

Figure 184. Turret Armor Instl (FTAC) - 13024674
(Sheet 1 of 4)

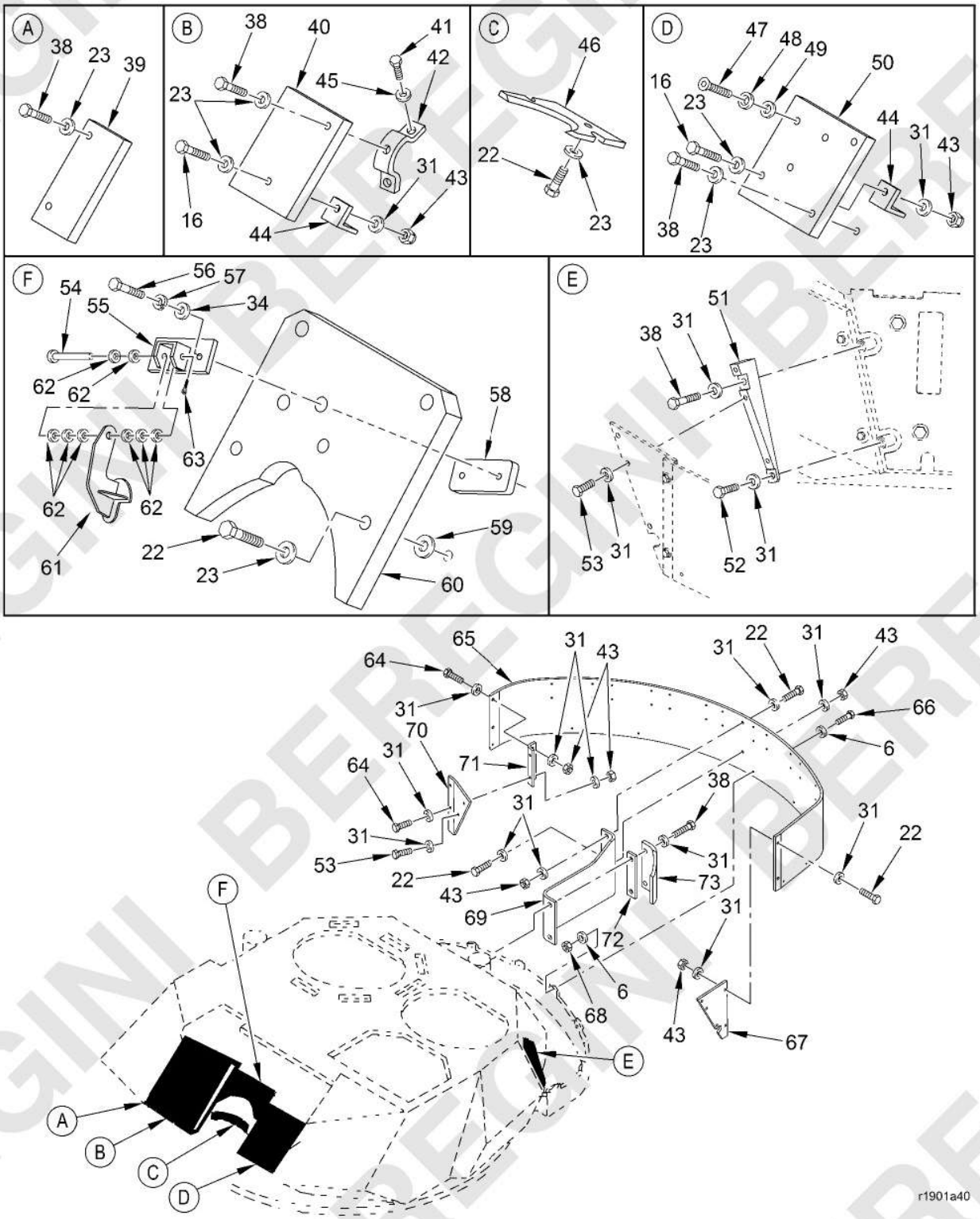

Figure 184. Turret Armor Instl (FTAC) - 13024674
(Sheet 2 of 4)

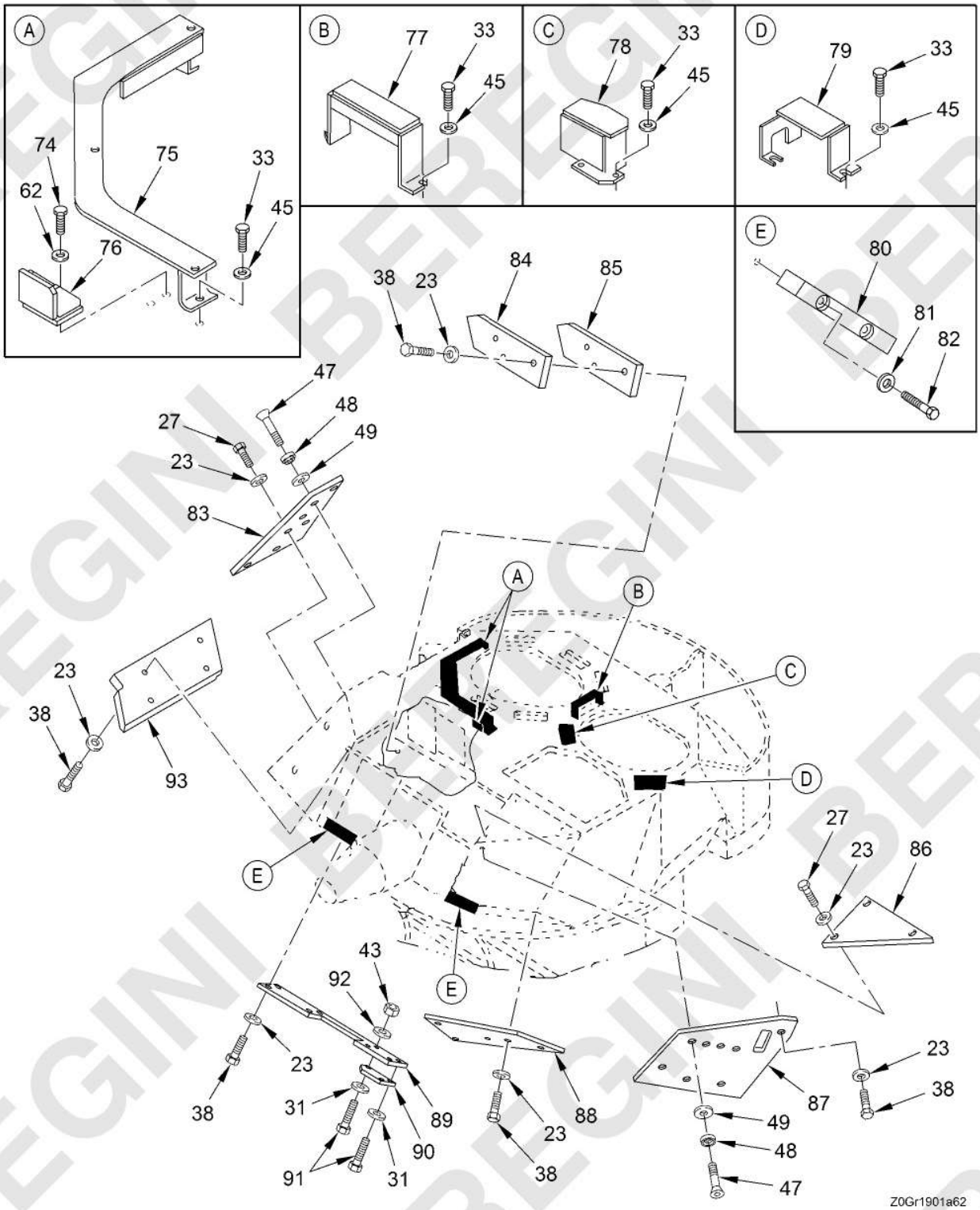

Figure 184. Turret Armor Instl (FTAC) - 13024674
(Sheet 3 of 4)

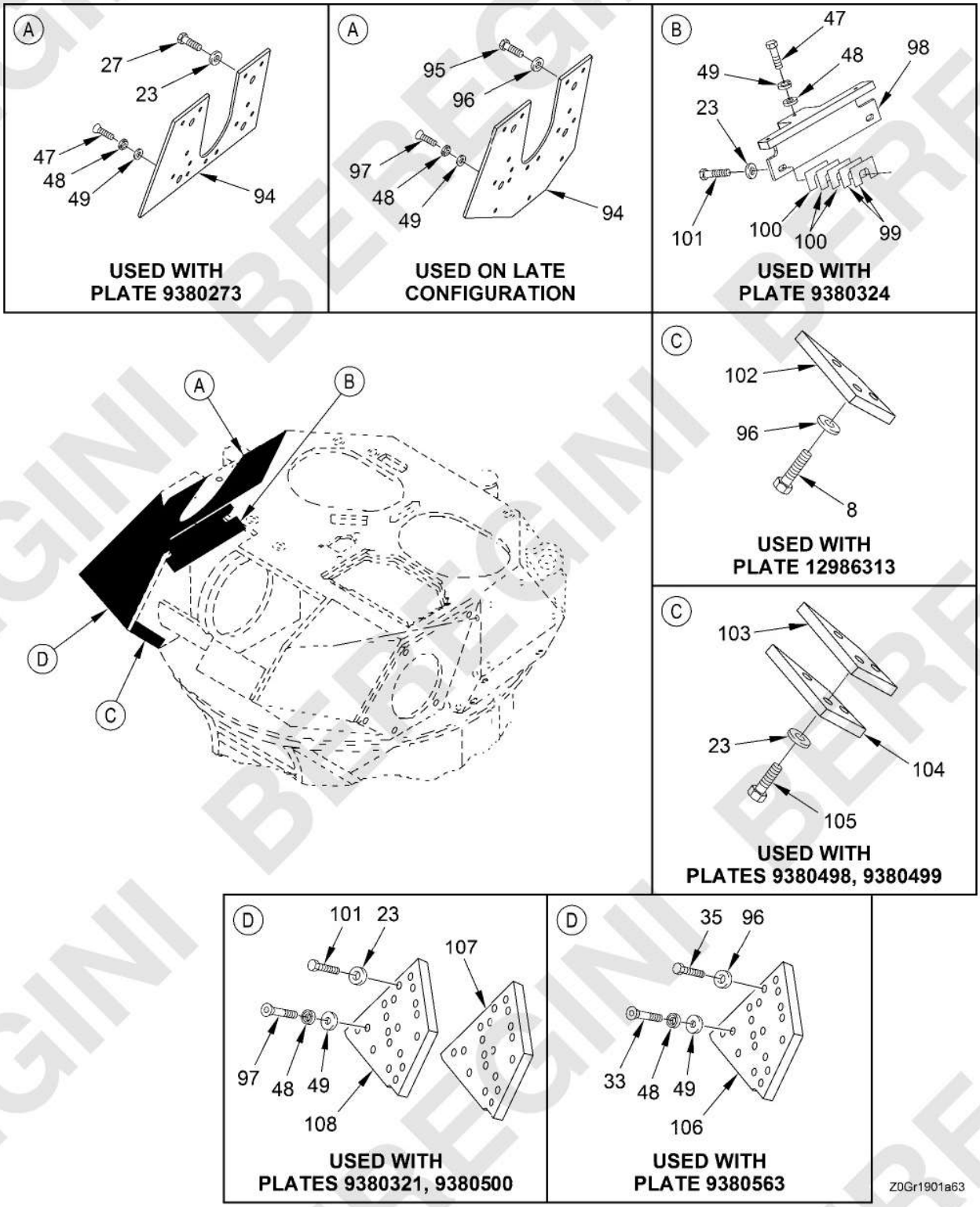

Figure 184. Turret Armor Instl (FTAC) - 13024674
(Sheet 4 of 4)

(1) ITEM NO.	(2) SMR CODE	(3) NSN	(4) CAGEC	(5) PART NUMBER	(6) DESCRIPTION AND USABLE ON CODE (UOC)	(7) QTY
					GROUP FTAC TURRET ARMOR INSTL	
					FIGURE 184 Turret Armor Instl (FTAC) - 13024674	
1	PAFZZ	9535-01-477-7856	19200	12986322	ARMOR PLATE	1
2	PAFZZ	5310-00-999-9438	19200	10910174-23	WASHER,FLAT UOC: BSA	44
3	PAFZZ	5305-00-922-7994	05047	AES01C750B50AW9A91	SCREW,CAP,HEXAGON H UOC: BSA	22
4	PAFZZ	9535-01-596-4906	19207	13024783	ARMOR PLATE UOC: BSA	1
5	PAFZZ	2541-01-497-9083	19200	9379895-9	BASKET,ACCESSOR UOC: BSA	1
6	PAFZZ	5310-00-058-1305	19207	10910174-20	WASHER,FLAT UOC: BSA	28
7	PAFZZ	5305-00-068-7837	05047	AEB02C250625WA6AA1	SCREW,CAP,HEXAGON H UOC: BSA	10
8	PAFZZ	5305-00-947-4356	80204	B1821BH075C350N	SCREW,CAP,HEXAGON H	5
9	PAFZZ	5340-01-458-8994	19200	12976749	BRACKET,MOUNTING	1
10	PAFZZ	5305-00-543-4372	05047	AES01C375750AW9A91	SCREW,CAP,HEXAGON H	2
11	PAFZZ	5310-00-011-5093	80205	MS35338-65	WASHER,LOCK	2
12	PAFZZ	5340-01-457-0185	19200	12976736	COVER,ACCESS	1
13	PAFZZ	5310-01-505-0243	81349	M45913/1-8CG5Z	NUT,SELF-LOCKING,HE UOC: BSA	1
14	PAFZZ	5310-00-011-6121	96906	MS35338-67	WASHER,LOCK UOC: BSA	1
15	PAFZZ	5310-00-767-9425	80205	MS15795-818	WASHER,FLAT UOC: BSA	1
16	PAFZZ	5305-00-071-2074	80204	B1821BH050C275N	SCREW,CAP,HEXAGON H	5
17	PAFZZ	5340-01-384-5397	19200	12933438	BRACKET,MOUNTING	1
18	PAFZZ	9515-01-459-0242	19200	12976737	ARMOR PLATE	1
19	PAFZZ	2540-01-386-4474	19200	12933434	ARMOR,SUPPLEMENTAL,	1
20	PAFZZ	5340-01-384-5343	19200	12933439	BRACKET,MOUNTING	1
21	PAFZZ	2540-01-386-4163	19200	12933435	ARMOR,SUPPLEMENTAL,	1
22	PAFZZ	5305-00-071-2071	05047	AES02C500B00AW9A81	SCREW,CAP,HEXAGON H	23
23	PAFZZ	5310-00-143-6394	19207	10941915-6	WASHER,FLAT USED ON EARLY CONFIGURATION	62
23	PAFZZ	5310-00-143-6394	19207	10941915-6	WASHER,FLAT USED ON LATE CONFIGURATION	50

(1) ITEM NO.	(2) SMR CODE	(3) NSN	(4) CAGEC	(5) PART NUMBER	(6) DESCRIPTION AND USABLE ON CODE (UOC)	(7) QTY
24	PAFZZ	9515-01-268-3375	19200	9380005	ARMOR PLATE	1
25	PAFZZ	9515-01-267-8106	19200	9380002	ARMOR PLATE	1
26	PAFZZ	9515-01-267-8108	19200	9380004	ARMOR PLATE	1
27	PAFZZ	5305-00-071-2070	80204	B1821BH050C175N	SCREW,CAP,HEXAGON H USED ON LATE CONFIGURATION	8
27	PAFZZ	5305-00-071-2070	80204	B1821BH050C175N	SCREW,CAP,HEXAGON H USED ON EARLY CONFIGURATION	11
28	PAFZZ	9515-01-267-8107	19200	9380003	ARMOR PLATE	1
29	PAFZZ	5310-00-809-3079	96906	MS27183-19	WASHER,FLAT	39
30	PAFZZ	9515-01-266-3590	19200	9380110	ARMOR PLATE	1
31	PAFZZ	5310-00-866-4417	19207	10910174-5	WASHER,FLAT UOC: BSA	35
32	PAFZZ	1005-01-266-3565	19200	9380362	GUARD,BRUSH	1
33	PAFZZ	5305-00-068-0510	80204	B1821BH038C100N	SCREW,CAP,HEXAGON H UOC: BSA	9
34	PAFZZ	5310-00-728-9957	19207	10910174-22	WASHER,FLAT UOC: BSA	4
35	PAFZZ	5305-00-947-4354	05047	AES01C750C00AW9A91	SCREW,CAP,HEXAGON H	6
36	PAFZZ	5340-01-384-5387	19200	12933436	BRACKET,MOUNTING UOC: BSA	1
37	PAFZZ	9535-01-596-4902	19207	13024784	ARMOR PLATE UOC: BSA	1
38	PAFZZ	5305-00-071-2073	05047	AES01C500B50AW9A91	SCREW,CAP,HEXAGON H	23
39	PAFZZ	9515-01-266-3601	19200	9380025	ARMOR PLATE	1
40	PAFZZ	9515-01-273-5982	19200	9380331	ARMOR PLATE	1
41	PAFZZ	5305-00-688-2111	05047	AES01C375A37AW9A91	SCREW,CAP,HEXAGON H	2
42	PAFZZ	5340-01-266-3580	19200	9379946	BRACKET,DOUBLE ANGL	1
43	PAFZZ	5310-01-505-0243	81349	M45913/1-8CG5Z	NUT,SELF-LOCKING,HE UOC: BSA	13
44	PAFZZ	5340-01-266-3584	19200	9380330	BRACKET,ANGLE	2
45	PAFZZ	5310-00-877-5972	19200	10910174-3	WASHER,FLAT UOC: BSA	17
46	PAFZZ	9515-01-266-3591	19200	9379924	ARMOR PLATE	1
47	PAFZZ	5305-01-273-9474	19200	12576362	SCREW,CAP,HEXAGON H USED ON EARLY CONFIGURATION	30
47	PAFZZ	5305-01-273-9474	19200	12576362	SCREW,CAP,HEXAGON H USED ON LATE CONFIGURATION	15
48	PAFZZ	5310-01-251-8576	19200	12576345	WASHER,SHOULDERED A USED ON LATE CONFIGURATION	45

(1) ITEM NO.	(2) SMR CODE	(3) NSN	(4) CAGEC	(5) PART NUMBER	(6) DESCRIPTION AND USABLE ON CODE (UOC)	(7) QTY
48	PAFZZ	5310-01-251-8576	19200	12576345	WASHER,SHOULDERED A USED ON EARLY CONFIGURATION	60
49	PAFZZ	5310-00-809-8540	96906	MS27183-25	WASHER,FLAT USED ON LATE CONFIGURATION	45
49	PAFZZ	5310-00-809-8540	96906	MS27183-25	WASHER,FLAT USED ON EARLY CONFIGURATION	60
50	PAFZZ	9515-01-299-8778	19200	9380363	ARMOR PLATE	1
51	PAFZZ	5340-01-464-2795	19200	9379953-1	BRACKET,MOUNTING UOC: BSA	1
52	PAFZZ	5305-00-071-2067	80204	B1821BH050C125N	SCREW,CAP,HEXAGON H	1
53	PAFZZ	5305-00-732-0511	80204	B1821BH050C113N	SCREW,CAP,HEXAGON H UOC: BSA	5
54	PAFZZ	5315-00-957-9399	96906	MS20392-5C37	PIN,STRAIGHT,HEADED	1
55	PAFZZ	1005-01-300-6475	19200	9380475	MOUNT,GUN	1
56	PAFZZ	5305-00-638-8920	05047	AES01C375B25AW9A91	SCREW,CAP,HEXAGON H	2
57	PAFZZ	5310-00-004-5033	80205	MS35338-46	WASHER,LOCK UOC: BSA	6
58	PAFZZ	9905-01-300-4159	19200	9380476	PLATE,IDENTIFICATIO	1
59	PAFZZ	5310-01-104-9035	19204	10910174-38	WASHER,FLAT	4
60	PAFZZ	9515-01-300-6444	19200	9380474	ARMOR PLATE	1
61	PAFZZ	5340-01-347-1869	19200	9380286	BRACKET,MOUNTING	1
62	PAFZZ	5310-00-080-6004	96906	MS27183-14	WASHER,FLAT UOC: BSA	10
63	PAFZZ	5315-01-359-1451	80205	MS24665-285	PIN,COTTER	1
64	PAFZZ	5305-00-071-2069	05047	AES01C500A50AW9A91	SCREW,CAP,HEXAGON H UOC: BSA	4
65	PAFZZ	9515-01-268-3376	19200	9379897	ARMOR PLATE UOC: BSA	1
66	PAFZZ	5305-00-225-3842	05047	AES01C250A12AW9A91	SCREW,CAP,HEXAGON H	9
67	PAFZZ	9515-01-268-0388	19200	9379951	ARMOR PLATE	1
68	PAFZZ	5310-00-088-1251	81349	M45913/1-4CG5Z	NUT,SELF-LOCKING,HE	9
69	PAFZZ	5340-01-457-7009	19200	12976349	BRACKET,DOUBLE ANGL	1
70	PAFZZ	9515-01-266-3594	19200	9380253	ARMOR PLATE UOC: BSA	1
71	PAFZZ	5340-01-266-3583	19200	9380255	BRACKET,ANGLE UOC: BSA	1
72	PAFZZ	5365-01-366-7762	19200	9381024	SPACER,SLEEVE	1
73	PAFZZ	5340-01-459-0044	19200	12976353	BRACKET,ANGLE	1
74	PAFZZ	5305-00-068-0511	05047	AES01C375A25AZ0A86	SCREW,CAP,HEXAGON H	2

(1) ITEM NO.	(2) SMR CODE	(3) NSN	(4) CAGEC	(5) PART NUMBER	(6) DESCRIPTION AND USABLE ON CODE (UOC)	(7) QTY
75	PAFZZ	2540-01-564-5231	19200	13015167	SHIELD,PERISCOPE UOC: BSA	1
76	PAFZZ	2540-01-605-4215	19200	13024811	ARMOR,SUPPLEMENTAL	1
77	PAFZZ	2540-01-227-7067	19200	9379823	ARMOR,SUPPLEMENTAL,	1
78	PAFZZ	2540-01-227-7068	19200	9379824	ARMOR,SUPPLEMENTAL,	1
79	PAFZZ	2540-01-227-7069	19200	9379825	ARMOR,SUPPLEMENTAL	1
80	PAFZZ	5340-01-266-3581	19200	9379899	PLATE,MENDING	2
81	PAFZZ	5310-00-809-5998	96906	MS27183-18	WASHER,FLAT	4
82	PAFZZ	5305-00-071-2072	80204	B1821BH050C225N	SCREW,CAP,HEXAGON H	4
83	PAFZZ	9515-01-266-3598	19200	9380227	ARMOR PLATE	1
84	PAFZZ	9515-01-300-4155	19200	9380320	ARMOR PLATE	1
85	PAFZZ	9515-01-303-5223	19200	9380315	ARMOR PLATE	1
86	PAFZZ	9515-01-266-3599	19200	9380168	ARMOR PLATE	1
87	PAFZZ	9515-01-266-3600	19200	9380250	ARMOR PLATE	1
88	PAFZZ	9515-01-266-9593	19200	9380167	ARMOR PLATE	1
89	PAFZZ	9515-01-273-5981	19200	9379896	ARMOR PLATE	1
90	PAFZZ	5340-01-425-0680	19200	12933632	COVER,ACCESS	1
91	PAFZZ	5305-00-071-2076	05047	AES01C500C25AW9A91	SCREW,CAP,HEXAGON H	3
92	PAFZZ	5310-00-435-0674	19200	10910174-28	WASHER,FLAT	1
93	PAFZZ	9535-01-266-3593	19200	9380270	ARMOR PLATE	1
94	PAFZZ	9515-01-298-6631	19200	9380324	ARMOR PLATE USED WITH PLATE 9380273	1
94	PAFZZ	2540-01-340-7940	19200	9380568	ARMOR,SUPPLEMENTAL,	1
95	PAFZZ	5305-00-836-8346	05047	AES01C750A75AW9A91	SCREW,CAP,HEXAGON H	4
96	PAFZZ	5310-00-877-7527	19200	10910174-8	WASHER,FLAT	11
97	PAFZZ	5305-00-052-2236	96906	MS24667-74	SCREW,CAP,SOCKET HE USED ON LATE CONFIGURATION	30
97	PAFZZ	5305-00-052-2236	96906	MS24667-74	SCREW,CAP,SOCKET HE USED ON EARLY CONFIGURATION	15
98	PAFZZ	5340-01-302-4196	19200	9380273	BRACKET,MOUNTING USED WITH PLATE 9380324	1
99	PAFZZ	5365-01-317-7070	19200	9380547-1	SHIM	4
100	PAFZZ	5365-01-321-9877	19200	9380547-2	SPACER,PLATE	6
101	PAFZZ	5305-00-071-2077	05047	AES01C500C50AW9A91	SCREW,CAP,HEXAGON H USED ON EARLY CONFIGURATION	6
102	PAFZZ	9535-01-323-5184	19200	9380563	ARMOR PLATE USED WITH PLATE 12986313	1

(1) ITEM NO.	(2) SMR CODE	(3) NSN	(4) CAGEC	(5) PART NUMBER	(6) DESCRIPTION AND USABLE ON CODE (UOC)	(7) QTY
103	PAFZZ	9515-01-298-6630	19200	9380321	ARMOR PLATE USED WITH PLATES 9380498,9380499	1
104	PAFZZ	5340-01-342-3202	19200	9380500	PLATE,MOUNTING USED WITH PLATES 9380498,9380499	1
105	PAFZZ	5305-00-071-2075	80204	B1821BH050C300N	SCREW,CAP,HEXAGON H USED ON EARLY CONFIGURATION UOC: BSA	3
106	PAFZZ	9515-01-469-9973	19200	12986313	ARMOR PLATE USED WITH PLATE 9380563	1
107	PAFZZ	2510-01-334-7016	19200	9380499	PLATE,BODY USED WITH PLATES 9380321,9380500	1
108	PAFZZ	5340-01-341-7185	19200	9380498	PLATE,MOUNTING USED WITH PLATES 9380321,9380500	1
					END OF FIGURE	

MAINTAINER

TURRET ARMOR INSTL (FTAC) - 12933737, 12933737-1

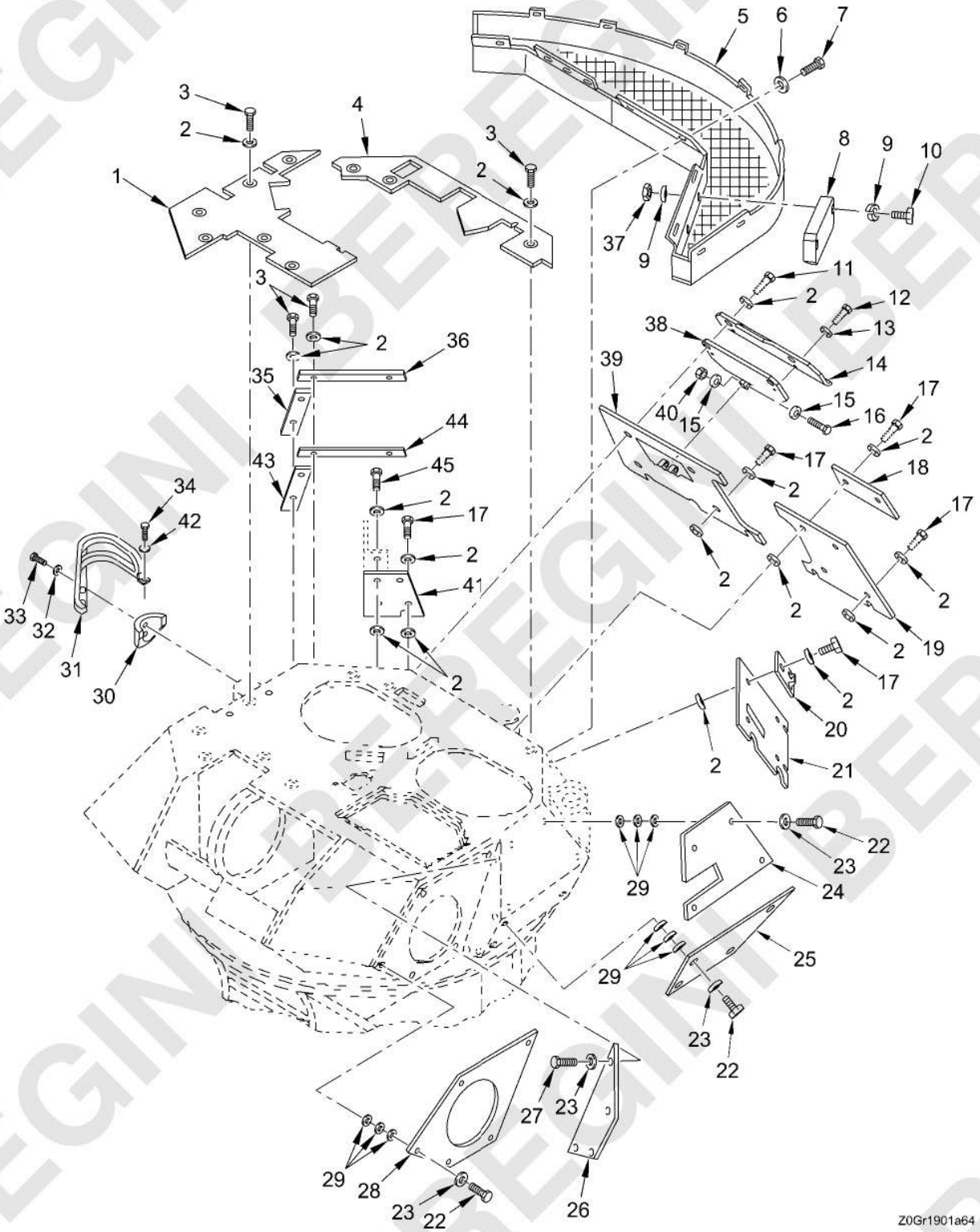

Figure 185. Turret Armor Instl (FTAC) - 12933737, 12933737-1
(Sheet 1 of 4)

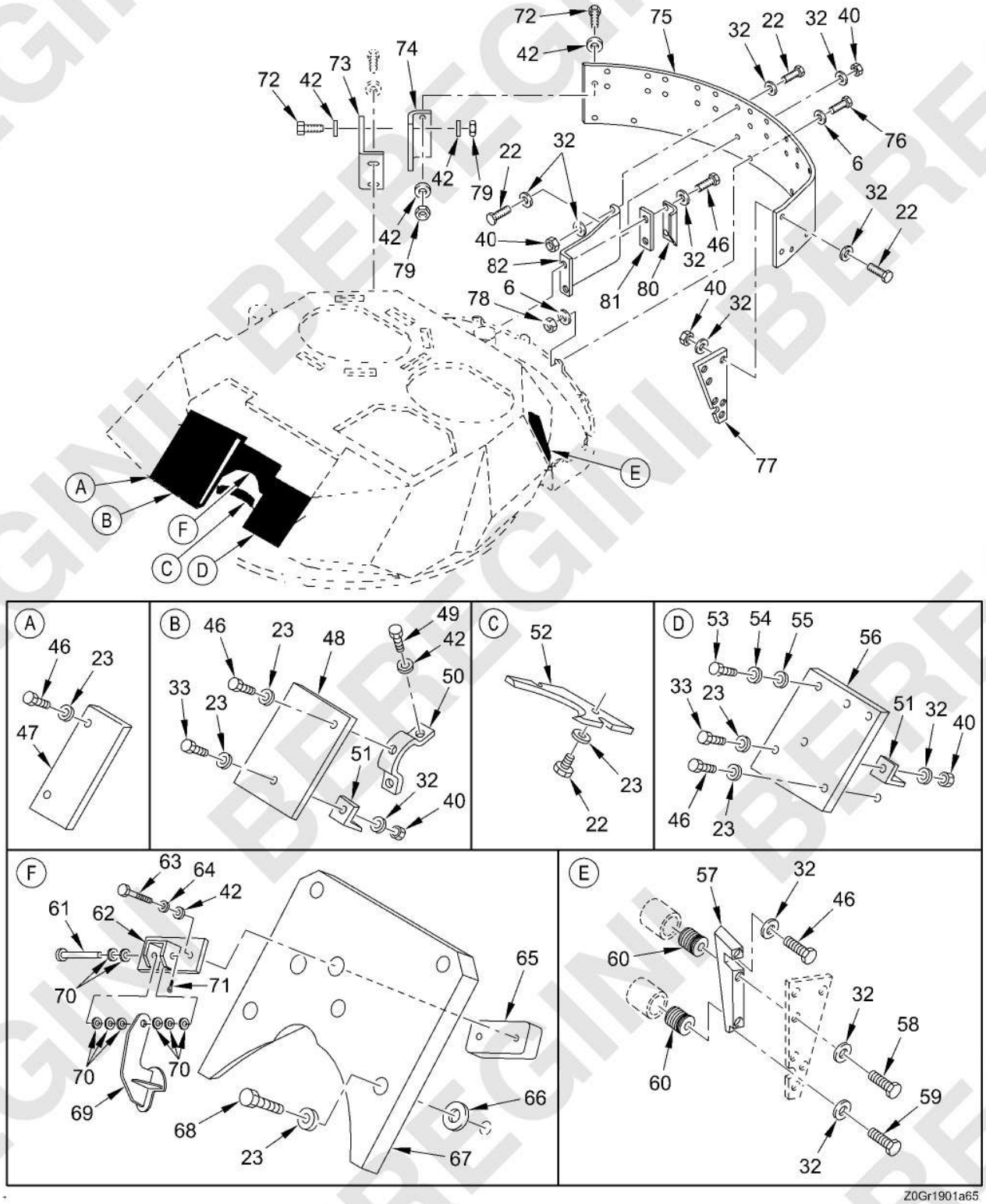

Figure 185. Turret Armor Instl (FTAC) - 12933737, 12933737-1
(Sheet 2 of 4)

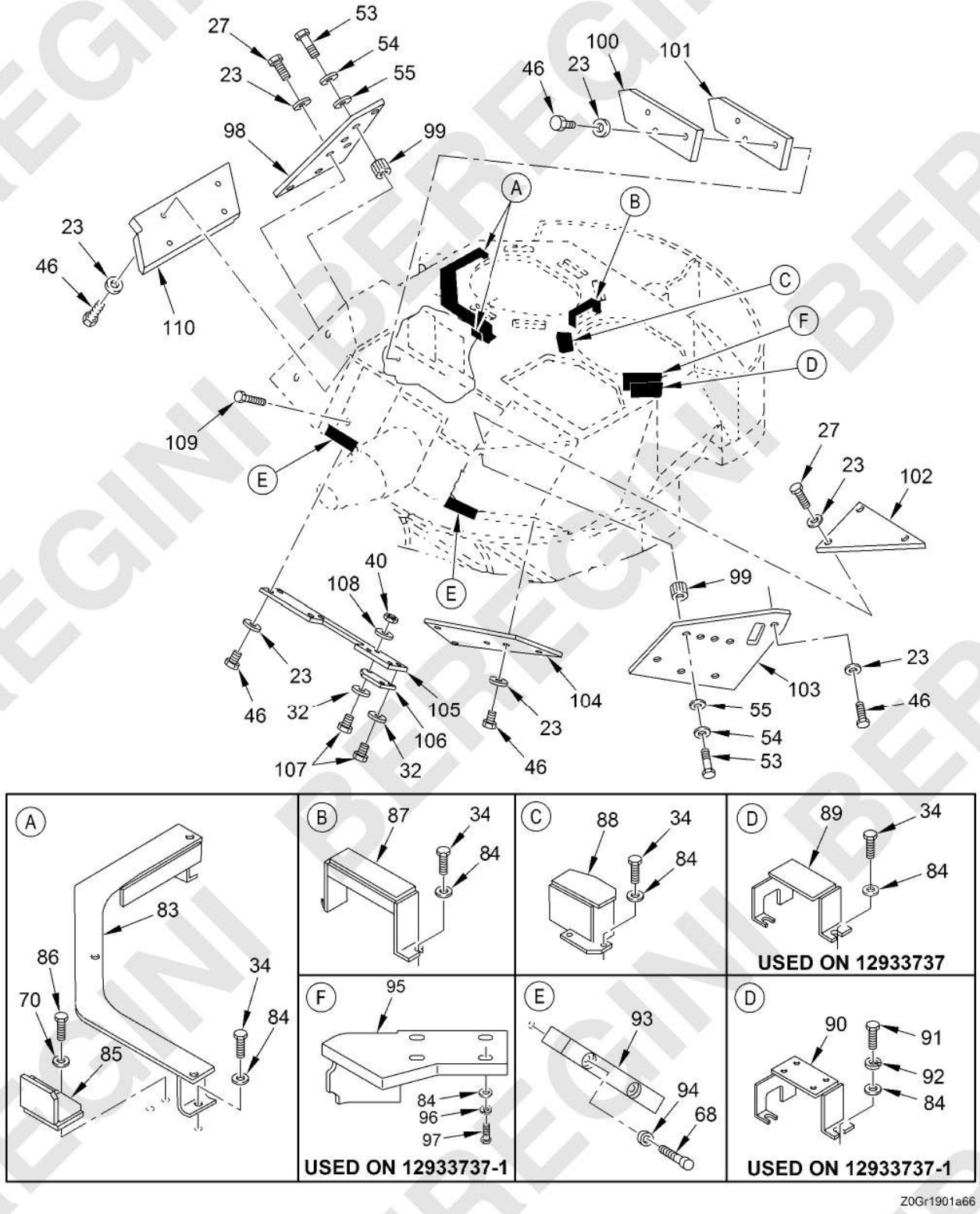

Figure 185. Turret Armor Instl (FTAC) - 12933737, 12933737-1
(Sheet 3 of 4)

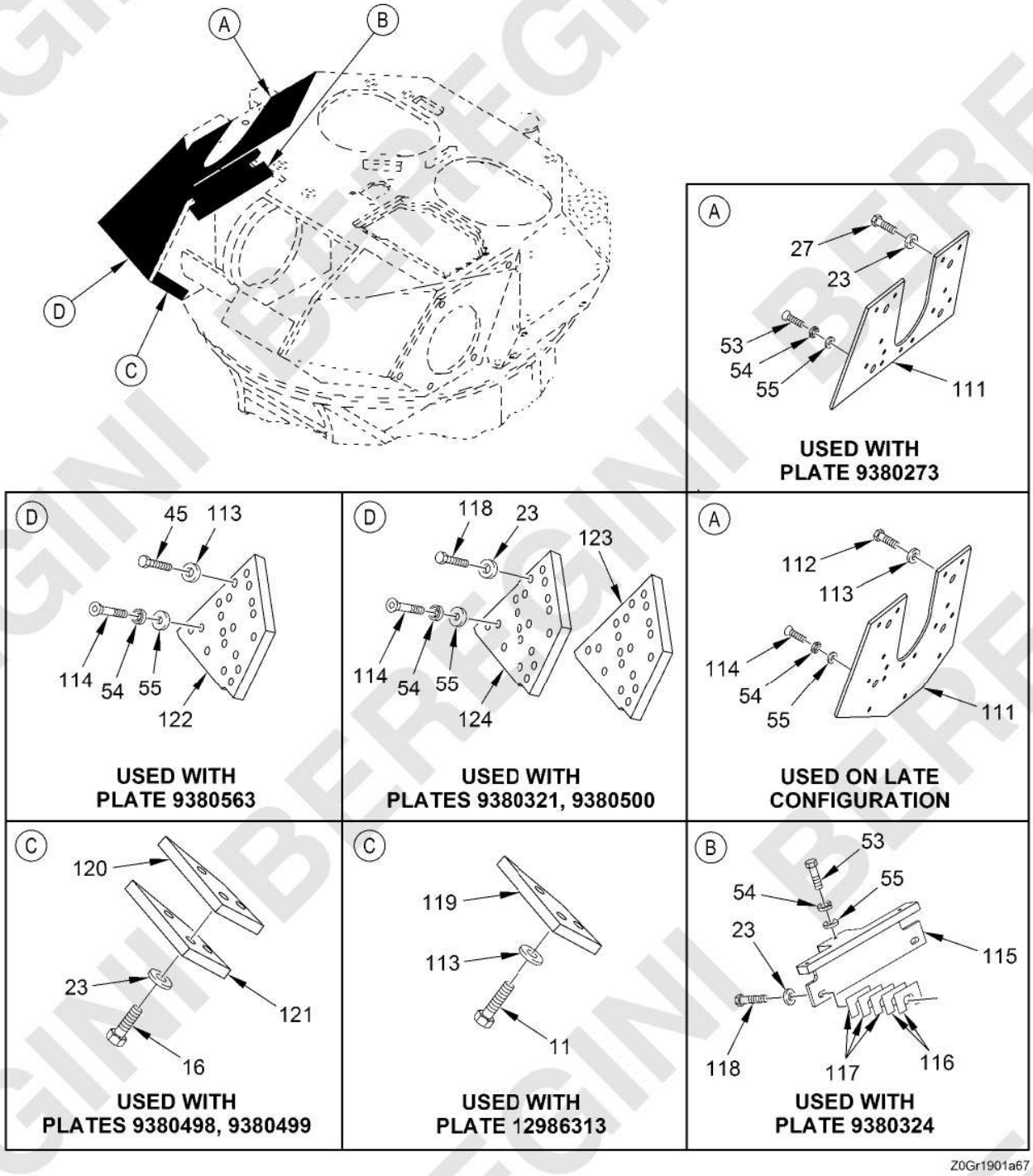

Figure 185. Turret Armor Instl (FTAC) - 12933737, 12933737-1
(Sheet 4 of 4)

(1) ITEM NO.	(2) SMR CODE	(3) NSN	(4) CAGEC	(5) PART NUMBER	(6) DESCRIPTION AND USABLE ON CODE (UOC)	(7) QTY
					GROUP FTAC TURRET ARMOR INSTL	
					FIGURE 185 Turret Armor Instl (FTAC) - 12933737, 12933737-1	
1	PAFZZ	9535-01-477-7856	19200	12986322	ARMOR PLATE	1
[redacted]						
11	PAFZZ	5305-00-947-4356	80204	B1821BH075C350N	SCREW,CAP,HEXAGON H	5
12	PAFZZ	5305-00-543-4372	05047	AES01C375750AW9A91	SCREW,CAP,HEXAGON H	2
13	PAFZZ	5310-00-011-5093	80205	MS35338-65	WASHER,LOCK	2
14	PAFZZ	5340-01-458-8994	19200	12976749	BRACKET,MOUNTING	2
15	PAFZZ	5310-00-866-4417	19207	10910174-5	WASHER,FLAT UOC: [redacted]	2
[redacted]						
18	PAFZZ	5340-01-384-5397	19200	12933438	BRACKET,MOUNTING	1
19	PAFZZ	2540-01-386-4474	19200	12933434	ARMOR,SUPPLEMENTAL,	1
20	PAFZZ	5340-01-384-5343	19200	12933439	BRACKET,MOUNTING	1
21	PAFZZ	2540-01-386-4163	19200	12933435	ARMOR,SUPPLEMENTAL,	1
22	PAFZZ	5305-00-071-2071	05047	AES02C500B00AW9A81	SCREW,CAP,HEXAGON H	20
23	PAFZZ	5310-00-143-6394	19207	10941915-6	WASHER,FLAT USED ON LATE CONFIGURATION	50

(1) ITEM NO.	(2) SMR CODE	(3) NSN	(4) CAGEC	(5) PART NUMBER	(6) DESCRIPTION AND USABLE ON CODE (UOC)	(7) QTY
23	PAFZZ	5310-00-143-6394	19207	10941915-6	WASHER,FLAT USED ON EARLY CONFIGURATION	62
24	PAFZZ	9515-01-268-3375	19200	9380005	ARMOR PLATE	1
25	PAFZZ	9515-01-267-8106	19200	9380002	ARMOR PLATE	1
26	PAFZZ	9515-01-267-8108	19200	9380004	ARMOR PLATE	1
27	PAFZZ	5305-00-071-2070	80204	B1821BH050C175N	SCREW,CAP,HEXAGON H USED ON LATE CONFIGURATION	8
27	PAFZZ	5305-00-071-2070	80204	B1821BH050C175N	SCREW,CAP,HEXAGON H USED ON EARLY CONFIGURATION	11
28	PAFZZ	9515-01-267-8107	19200	9380003	ARMOR PLATE	1
29	PAFZZ	5310-00-809-3079	96906	MS27183-19	WASHER,FLAT	39
30	PAFZZ	9515-01-266-3590	19200	9380110	ARMOR PLATE	1
31	PAFZZ	1005-01-266-3565	19200	9380362	GUARD,BRUSH	1
[redacted]						
33	PAFZZ	5305-00-071-2074	80204	B1821BH050C275N	SCREW,CAP,HEXAGON H	5
34	PAFZZ	5305-00-068-0510	80204	B1821BH038C100N	SCREW,CAP,HEXAGON H	9
[redacted]						
38	PAFZZ	5340-01-457-0185	19200	12976736	COVER,ACCESS	2
39	PAFZZ	9515-01-459-0242	19200	12976737	ARMOR PLATE	1
[redacted]						
45	PAFZZ	5305-00-947-4354	05047	AES01C750C00AW9A91	SCREW,CAP,HEXAGON H	6
46	PAFZZ	5305-00-071-2073	05047	AES01C500B50AW9A91	SCREW,CAP,HEXAGON H	23
47	PAFZZ	9515-01-266-3601	19200	9380025	ARMOR PLATE	1
48	PAFZZ	9515-01-273-5982	19200	9380331	ARMOR PLATE	1

(1) ITEM NO.	(2) SMR CODE	(3) NSN	(4) CAGEC	(5) PART NUMBER	(6) DESCRIPTION AND USABLE ON CODE (UOC)	(7) QTY
49	PAFZZ	5305-00-688-2111	05047	AES01C375A37AW9A91	SCREW,CAP,HEXAGON H	2
50	PAFZZ	5340-01-266-3580	19200	9379946	BRACKET,DOUBLE ANGL	1
51	PAFZZ	5340-01-266-3584	19200	9380330	BRACKET,ANGLE	2
52	PAFZZ	9515-01-266-3591	19200	9379924	ARMOR PLATE	1
53	PAFZZ	5305-01-273-9474	19200	12576362	SCREW,CAP,HEXAGON H USED ON LATE CONFIGURATION	15
53	PAFZZ	5305-01-273-9474	19200	12576362	SCREW,CAP,HEXAGON H USED ON EARLY CONFIGURATION	30
54	PAFZZ	5310-01-251-8576	19200	12576345	WASHER,SHOULDERED A USED ON LATE CONFIGURATION	45
54	PAFZZ	5310-01-251-8576	19200	12576345	WASHER,SHOULDERED A USED ON EARLY CONFIGURATION	60
55	PAFZZ	5310-00-809-8540	96906	MS27183-25	WASHER,FLAT USED ON EARLY CONFIGURATION	60
55	PAFZZ	5310-00-809-8540	96906	MS27183-25	WASHER,FLAT USED ON LATE CONFIGURATION	45
56	PAFZZ	9515-01-299-8778	19200	9380363	ARMOR PLATE	1
[redacted]						
[redacted]						
59	PAFZZ	5305-00-071-2067	80204	B1821BH050C125N	SCREW,CAP,HEXAGON H	1
[redacted]						
61	PAFZZ	5315-00-957-9399	96906	MS20392-5C37	PIN,STRAIGHT,HEADED	1
62	PAFZZ	1005-01-300-6475	19200	9380475	MOUNT,GUN	1
63	PAFZZ	5305-00-638-8920	05047	AES01C375B25AW9A91	SCREW,CAP,HEXAGON H	2
64	PAFZZ	5310-00-004-5033	80205	MS35338-46	WASHER,LOCK UOC: BSA	6
65	PAFZZ	9905-01-300-4159	19200	9380476	PLATE,IDENTIFICATIO	1
66	PAFZZ	5310-01-104-9035	19204	10910174-38	WASHER,FLAT	3
67	PAFZZ	9515-01-300-6444	19200	9380474	ARMOR PLATE	1
68	PAFZZ	5305-00-071-2072	80204	B1821BH050C225N	SCREW,CAP,HEXAGON H	7
69	PAFZZ	5340-01-347-1869	19200	9380286	BRACKET,MOUNTING	1
[redacted]						
71	PAFZZ	5315-01-359-1451	80205	MS24665-285	PIN,COTTER	1
[redacted]						

(1) ITEM NO.	(2) SMR CODE	(3) NSN	(4) CAGEC	(5) PART NUMBER	(6) DESCRIPTION AND USABLE ON CODE (UOC)	(7) QTY
[redacted]						
76	PAFZZ	5305-00-225-3842	05047	AES01C250A12AW9A91	SCREW,CAP,HEXAGON H	9
77	PAFZZ	9515-01-268-0388	19200	9379951	ARMOR PLATE	1
78	PAFZZ	5310-00-088-1251	81349	M45913/1-4CG5Z	NUT,SELF-LOCKING,HE	9
[redacted]						
80	PAFZZ	5340-01-459-0044	19200	12976353	BRACKET,ANGLE	1
81	PAFZZ	5365-01-366-7762	19200	9381024	SPACER,SLEEVE	1
82	PAFZZ	5340-01-457-7009	19200	12976349	BRACKET,DOUBLE ANGL	1
[redacted]						
85	PAFZZ	2540-01-605-4215	19200	13024811	ARMOR,SUPPLEMENTAL	2
[redacted]						
87	PAFZZ	2540-01-227-7067	19200	9379823	ARMOR,SUPPLEMENTAL,	1
88	PAFZZ	2540-01-227-7068	19200	9379824	ARMOR,SUPPLEMENTAL, USED ON 12933737	1
89	PAFZZ	2540-01-227-7069	19200	9379825	ARMOR,SUPPLEMENTAL USED ON 12933737	1
[redacted]						
93	PAFZZ	5340-01-266-3581	19200	9379899	PLATE,MENDING	2
94	PAFZZ	5310-00-809-5998	96906	MS27183-18	WASHER,FLAT	4
[redacted]						

(1) ITEM NO.	(2) SMR CODE	(3) NSN	(4) CAGEC	(5) PART NUMBER	(6) DESCRIPTION AND USABLE ON CODE (UOC)	(7) QTY
98	PAFZZ	9515-01-266-3598	19200	9380227	ARMOR PLATE	1
[redacted]						
100	PAFZZ	9515-01-300-4155	19200	9380320	ARMOR PLATE	1
101	PAFZZ	9515-01-303-5223	19200	9380315	ARMOR PLATE	1
102	PAFZZ	9515-01-266-3599	19200	9380168	ARMOR PLATE	1
103	PAFZZ	9515-01-266-3600	19200	9380250	ARMOR PLATE	1
104	PAFZZ	9515-01-266-9593	19200	9380167	ARMOR PLATE	1
105	PAFZZ	9515-01-273-5981	19200	9379896	ARMOR PLATE	1
106	PAFZZ	5340-01-425-0680	19200	12933632	COVER,ACCESS	1
107	PAFZZ	5305-00-071-2076	05047	AES01C500C25AW9A91	SCREW,CAP,HEXAGON H	3
108	PAFZZ	5310-00-435-0674	19200	10910174-28	WASHER,FLAT	1
109	PAFZZ	5305-00-068-0511	05047	AES01C375A25AZ0A86	SCREW,CAP,HEXAGON H	2
110	PAFZZ	9535-01-266-3593	19200	9380270	ARMOR PLATE	1
111	PAFZZ	2540-01-340-7940	19200	9380568	ARMOR,SUPPLEMENTAL,	1
111	PAFZZ	9515-01-298-6631	19200	9380324	ARMOR PLATE USED WITH PLATE 9380273	1
112	PAFZZ	5305-00-836-8346	05047	AES01C750A75AW9A91	SCREW,CAP,HEXAGON H	4
113	PAFZZ	5310-00-877-7527	19200	10910174-8	WASHER,FLAT	11
114	PAFZZ	5305-00-052-2236	96906	MS24667-74	SCREW,CAP,SOCKET HE USED ON EARLY CONFIGURATION	15
114	PAFZZ	5305-00-052-2236	96906	MS24667-74	SCREW,CAP,SOCKET HE USED ON LATE CONFIGURATION	30
115	PAFZZ	5340-01-302-4196	19200	9380273	BRACKET,MOUNTING USED WITH PLATE 9380324	1
116	PAFZZ	5365-01-317-7070	19200	9380547-1	SHIM	4
117	PAFZZ	5365-01-321-9877	19200	9380547-2	SPACER,PLATE	6
118	PAFZZ	5305-00-071-2077	05047	AES01C500C50AW9A91	SCREW,CAP,HEXAGON H USED ON EARLY CONFIGURATION	6
119	PAFZZ	9535-01-323-5184	19200	9380563	ARMOR PLATE USED WITH PLATE 12986313	1
120	PAFZZ	9515-01-298-6630	19200	9380321	ARMOR PLATE USED WITH PLATES 9380498, 9380499	1
121	PAFZZ	5340-01-342-3202	19200	9380500	PLATE,MOUNTING USED WITH PLATES 9380498,9380499	1
122	PAFZZ	9515-01-469-9973	19200	12986313	ARMOR PLATE USED WITH PLATES 9380563	1
123	PAFZZ	2510-01-334-7016	19200	9380499	PLATE,BODY USED WITH PLATES 9380321,9380500	1

(1) ITEM NO.	(2) SMR CODE	(3) NSN	(4) CAGEC	(5) PART NUMBER	(6) DESCRIPTION AND USABLE ON CODE (UOC)	(7) QTY
124	PAFZZ	5340-01-341-7185	19200	9380498	PLATE,MOUNTING USED WITH PLATES 9380321,9380500.....	1
					END OF FIGURE	

BEREGINI BEREGINI BEREGINI

MAINTAINER

GUARD INSTL, 25MM GUN (FTAD) - 12956727

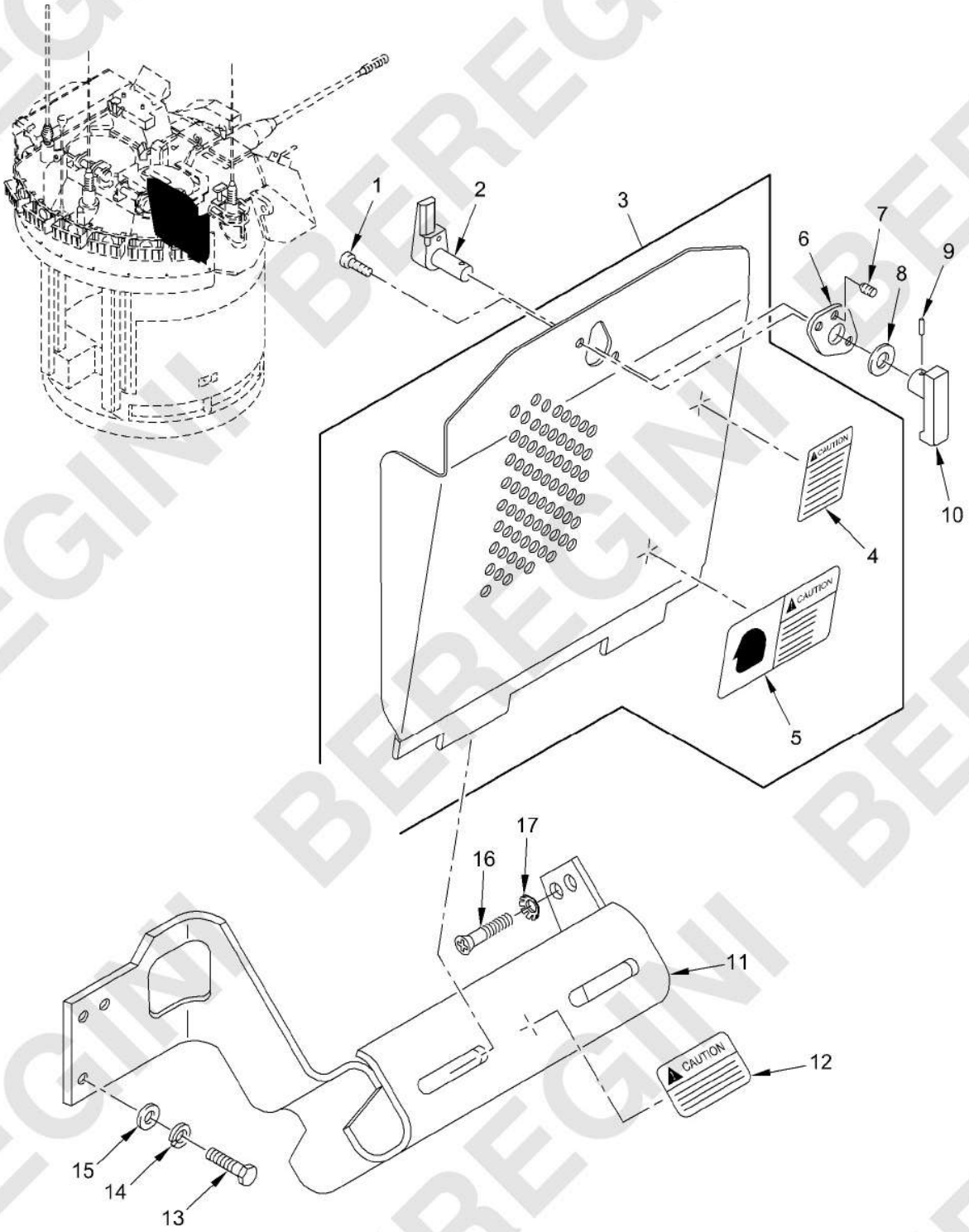

Figure 186. Guard Instl, 25MM Gun (FTAD) - 12956727

(1) ITEM NO.	(2) SMR CODE	(3) NSN	(4) CAGEC	(5) PART NUMBER	(6) DESCRIPTION AND USABLE ON CODE (UOC)	(7) QTY
					GROUP FTAD 25MM GUN GUARD INSTL	
					FIGURE 186 Guard Instl, 25MM Gun (FTAD) - 12956727	
1	PAFZZ	5305-00-978-9378	96906	MS16997-58	SCREW,CAP,SOCKET HE	2
2	PAFZZ	3040-01-128-9812	19207	12307450	CONNECTING LINK,RIG	1
3	PAFZZ	1005-01-476-5359	19200	12986665	GUARD,25MM,GUN	1
4	PAFZZ	9905-01-110-7606	19207	12298256	.PLATE,INSTRUCTION	1
5	PAFZZ	9905-01-109-8111	19207	12297759	.PLATE,INSTRUCTION	1
6	PAFZZ	1005-01-126-7832	19207	12307449	PLATE,LATCH	1
7	PAFZZ	5340-01-149-8001	19207	12308425	PLUNGER,QUICK RELEA	1
8	PAFZZ	5310-01-134-3287	96906	MS51859-9	WASHER,FLAT	1
9	PAFZZ	5315-01-058-3487	80205	NAS561P6-12	PIN,SPRING	1
10	PAFZZ	5340-01-099-0166	19207	12295242	LEVER,LOCK-RELEASE	1
11	PAFZZ	1095-01-505-0199	19200	12991997	SUPPORT,GUN GUARD	1
12	PAFZZ	7690-01-672-8134	19200	13020393	LABEL,RBD,25MM FEED	1
13	PAFZZ	5305-00-068-0510	80204	B1821BH038C100N	SCREW,CAP,HEXAGON H	3
14	PAFZZ	5310-00-004-5033	80205	MS35338-46	WASHER,LOCK	3
15	PAFZZ	5310-00-080-6004	96906	MS27183-14	WASHER,FLAT	3
16	PAFZZ	5305-00-958-5258	80205	MS35190-317	SCREW,MACHINE	2
17	PAFZZ	5310-00-194-9213	96906	MS35336-39	WASHER,LOCK	2
					END OF FIGURE	

0187-3/4 blank

BEREGINI BEREGINI BEREGINI

MAINTAINER

BULKHEAD DOOR INSTL, 7.62 (FTAE) - 12956679

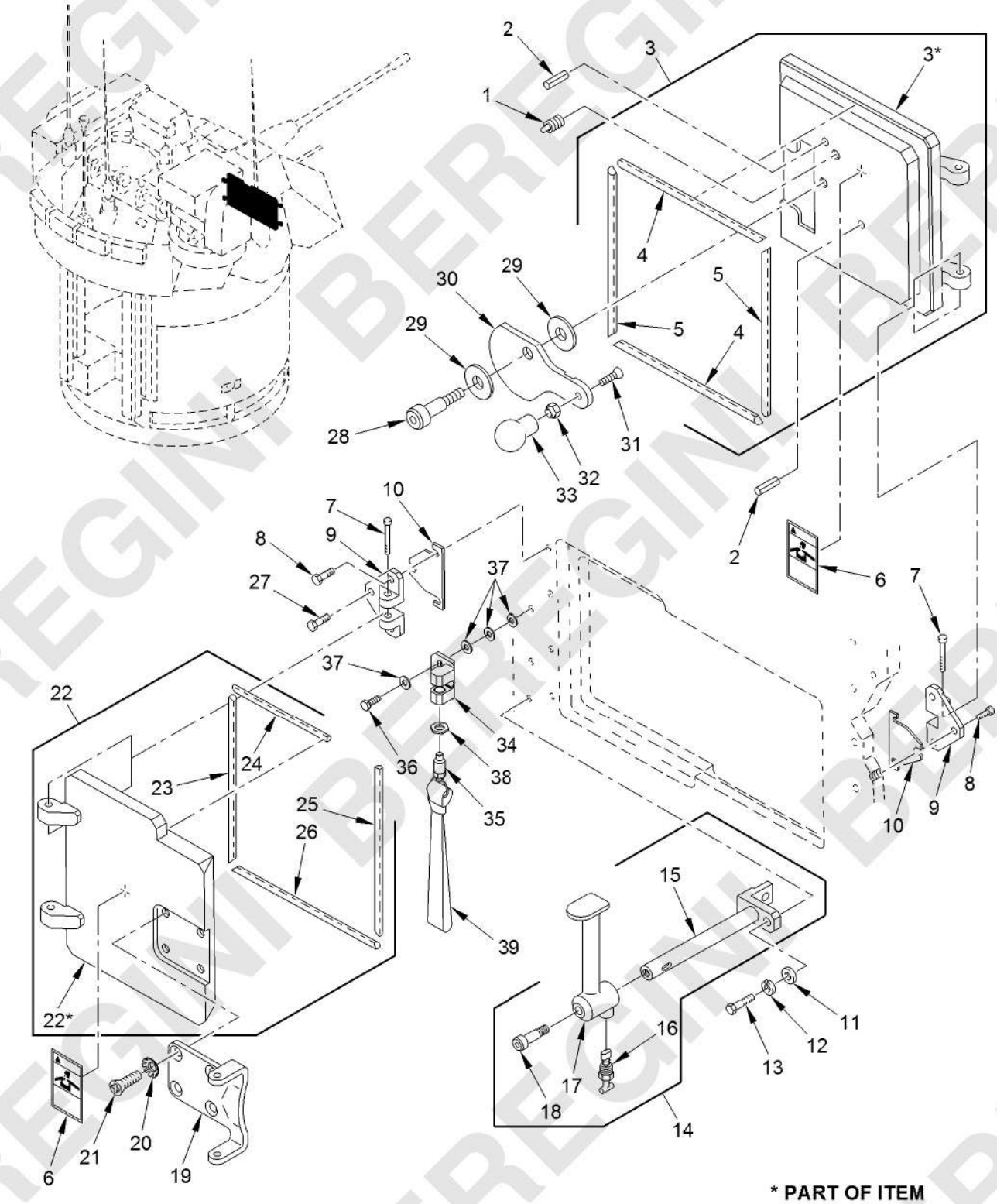

Figure 187. Bulkhead Door Instl, 7.62 (FTAE) - 12956679

(1) ITEM NO.	(2) SMR CODE	(3) NSN	(4) CAGEC	(5) PART NUMBER	(6) DESCRIPTION AND USABLE ON CODE (UOC)	(7) QTY
					GROUP FTAE 7.62 BULKHEAD DOOR INSTL	
					FIGURE 187 Bulkhead Door Instl, 7.62 (FTAE) - 12956679	
1	PAFZZ	5340-01-483-8710	99862	CL-60-SPS-2	PLUNGER,QUICK RELEA	1
2	PAFZZ	5315-00-844-5836	80205	MS16562-65	PIN,SPRING	2
3	PBFFF	5340-01-457-1038	19200	12976329	HINGE,ACCESS DOOR	1
4	MFFZZ		19200	12976329-2	.SEAL,.312W X 09.65L MAKE FROM SEAL P/N 9380644 (19200)	2
5	MFFZZ		19200	12976329-3	.SEAL,.312W X 10.66L MAKE FROM SEAL P/N 9380644 (19200)	2
6	PAFZZ	7690-01-464-9060	19200	12978987	MARKER,IDENTIFICATI	2
7	PAFZZ	5315-01-098-7340	19207	12294388	PIN,STRAIGHT,HEADED	4
8	PAFZZ	5305-00-068-0510	80204	B1821BH038C100N	SCREW,CAP,HEXAGON H	10
9	PAFZZ	5340-01-176-8798	19207	12316953	STRIKE,CATCH	4
10	PAFZZ	5365-01-179-9715	19207	12316959-1	SHIM .012 THICK	1
10	PAFZZ	5365-01-172-3105	19207	12316959-2	SHIM .032 THICK	1
10	PAFZZ	5365-01-172-3106	19207	12316959-3	SHIM .040 THICK	1
10	PAFZZ	5365-01-172-3107	19207	12316959-4	SHIM .060 THICK	1
11	PAFZZ	5310-00-080-6004	96906	MS27183-14	WASHER,FLAT	2
12	PAFZZ	5310-00-004-5033	80205	MS35338-46	WASHER,LOCK	2
13	PAFZZ	5305-00-543-2419	05047	AES01C375A12AW9A91	SCREW,CAP,HEXAGON H	2
14	PAFFF	5340-01-457-2936	19200	12976687	HAND HOLD ASSEMBLY	1
15	PAFZZ	2540-01-457-1292	19200	12976631	.HANDLE,DOOR,VEHICUL	1
16	PAFZZ	5305-01-458-3588	99862	CL-6-HRP	.SCREW,MACHINE	1
17	PAFZZ	2540-01-457-0428	19200	12976632	.HANDLE,DOOR,VEHICUL	1
18	PAFZZ	5305-00-914-3821	80205	MS51975-16	.SCREW,SHOULDER	1
19	PAFZZ	5340-01-586-5533	19200	13020292	BRACKET,MOUNTING	1
20	PAFZZ	5310-01-576-0742	80204	W211NAA0025NN421NNAB1	WASHER,LOCK	4
21	PAFZZ	5305-00-958-5258	80205	MS35190-317	SCREW,MACHINE	4
22	PBFFF	5340-01-457-1041	19200	12976328	HINGE,ACCESS DOOR	1
23	MFFZZ		19200	12976328-4	.SEAL,.312W X 10.56L MAKE FROM SEAL P/N 9380644 (19200)	1
24	MFFZZ		19200	12976328-3	.SEAL,.312W X 06.26L MAKE FROM SEAL P/N 9380644 (19200)	1
25	MFFZZ		19200	12976328-6	.SEAL,.312W X 10.10L MAKE FROM SEAL P/N 9380644 (19200)	1

(1) ITEM NO.	(2) SMR CODE	(3) NSN	(4) CAGEC	(5) PART NUMBER	(6) DESCRIPTION AND USABLE ON CODE (UOC)	(7) QTY
26	MFFZZ		19200	12976328-5	.SEAL,.312W X 10.21L	1
27	PAFZZ	5305-01-140-9118	80204	B1821BH038C088N	SCREW,CAP,HEXAGON H	2
28	PAFZZ	5305-00-939-0660	80205	MS51975-29	SCREW,SHOULDER	1
29	PAFZZ	5310-01-457-5514	19200	12976331-2	WASHER,FLAT .050 THICK	2
29	PAFZZ	5310-01-457-5523	19200	12976331-3	WASHER,FLAT .125 THICK	2
29	PAFZZ	5310-01-457-5533	19200	12976331-4	WASHER,FLAT	1
29	PAFZZ	5310-01-460-8984	19200	12976331-1	WASHER,FLAT .025 THICK	2
30	PAFZZ	5340-01-460-2466	19200	12976330	HANDLE,DOOR .250 THICK	1
31	PAFZZ	5305-00-954-3937	80205	MS35190-290	SCREW,MACHINE	1
32	PAFZZ	5310-00-088-1251	81349	M45913/1-4CG5Z	NUT,SELF-LOCKING,HE	1
33	PAFZZ	5355-01-456-8031	39428	6050K13	KNOB	1
34	PAFZZ	3460-01-495-2895	19200	12987605	V-BLOCK	1
35	PAFZZ	5360-01-526-6543	39428	8500A13	SPRING,FLAT	1
36	PAFZZ	5305-00-071-2505	80204	B1821BH025C088N	SCREW,CAP,HEXAGON H	2
37	PAFZZ	5310-01-568-1733	05047	AEW24X25N000BD6A91	WASHER,FLAT	4
38	PAFZZ	5310-01-621-6486	19200	13024687	NUT,THIN	1
39	PAFZZ	5340-00-831-6949	19207	8763238	STRAP,WEBBING	1
					END OF FIGURE	

MAINTAINER

ROTOR COVER INSTL (FTAF) - 9379988-1

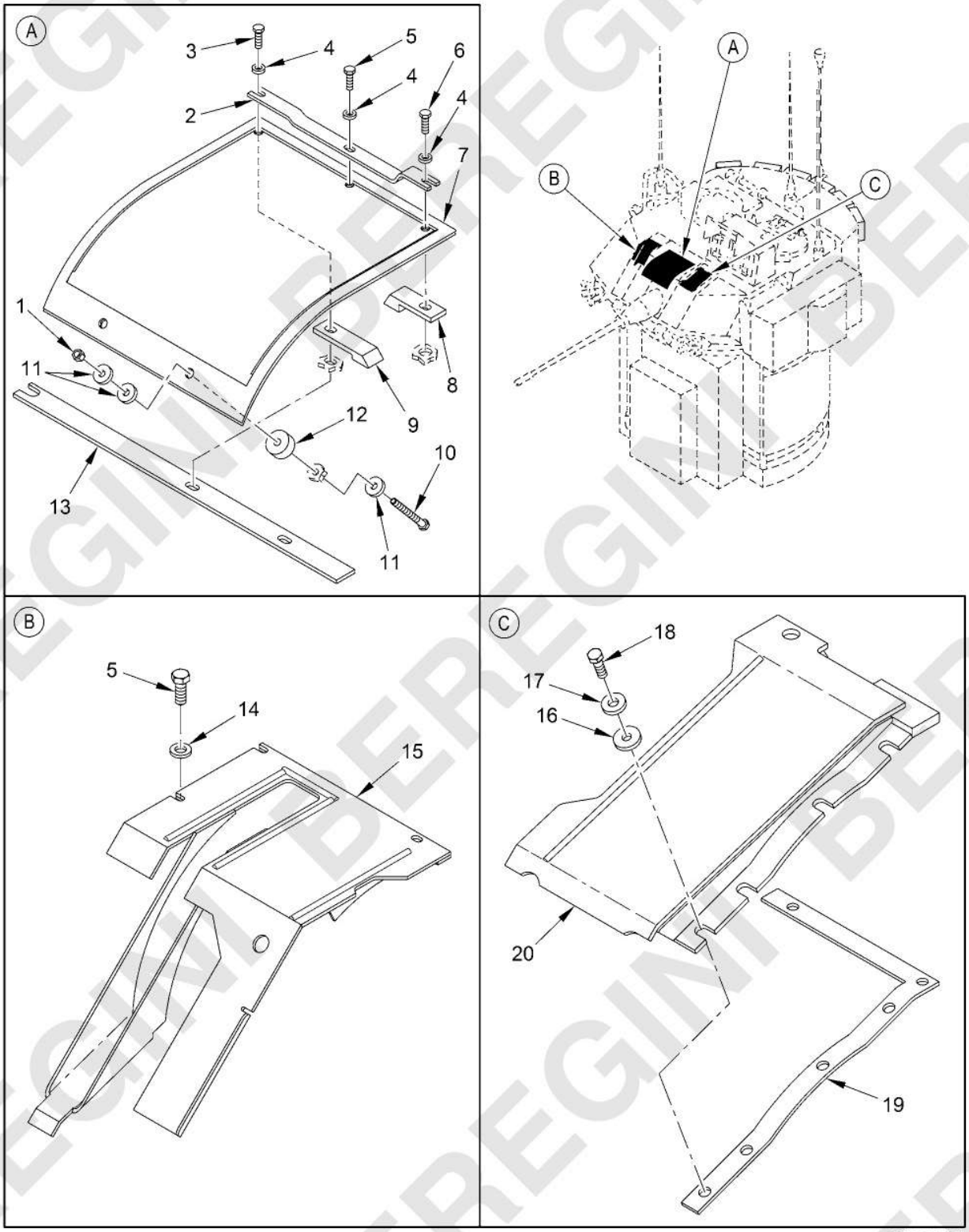

Figure 188. Rotor Cover Instl (FTAF) - 9379988-1

(1) ITEM NO.	(2) SMR CODE	(3) NSN	(4) CAGEC	(5) PART NUMBER	(6) DESCRIPTION AND USABLE ON CODE (UOC)	(7) QTY
					GROUP FTAF ROTOR COVER INSTL	
					FIGURE 188 Rotor Cover Instl (FTAF) - 9379988-1	
1	PAFZZ	5310-00-087-4652	81349	M45913/1-6CG5C	NUT,SELF-LOCKING,HE	2
2	PAFZZ	5340-01-268-3374	19200	9380343	BRACKET,DOUBLE ANGL	1
3	PAFZZ	5305-00-068-0511	05047	AES01C375A25AZ0A86	SCREW,CAP,HEXAGON H	3
4	PAFZZ	5310-00-080-6004	96906	MS27183-14	WASHER,FLAT	3
5	PAFZZ	5305-01-140-9118	80204	B1821BH038C088N	SCREW,CAP,HEXAGON H	1
6	PAFZZ	5305-00-725-2317	05047	AES01C375A50AW9A91	SCREW,CAP,HEXAGON H	1
7	PAFZZ	5340-01-596-7496	19200	13023331	COVER,ACCESS	1
8	PAFZZ	5330-01-588-9917	19200	13023335	GASKET	1
9	PAFZZ	5330-01-588-9920	19200	13023336	GASKET	1
10	PAFZZ	5305-00-990-8632	05047	AES01C375C75AW9A91	SCREW,CAP,HEXAGON H	2
11	PAFZZ	5310-00-987-1294	19207	10910174-16	WASHER,FLAT	6
12	PAFZZ	5365-01-312-5436	19200	9380504	SPACER,RING	2
13	PAFZZ	5330-01-588-4018	19200	13023333	SEAL	1
14	PAFZZ	5310-00-877-5972	19200	10910174-3	WASHER,FLAT	2
15	PAFZZ	5340-01-590-0339	19200	9380337-1	COVER,ACCESS	1
16	PAFZZ	5310-01-340-7412	19200	9380985	WASHER,FLAT	4
17	PAFZZ	5310-00-809-4061	96906	MS27183-15	WASHER,FLAT	4
18	PAFZZ	5305-00-543-2419	05047	AES01C375A12AW9A91	SCREW,CAP,HEXAGON H	4
19	PAFZZ	5330-01-273-5988	19200	9380233	SEAL,NONMETALLIC ST	1
20	PAFZZ	5340-01-596-5063	19200	9380232-1	COVER,GUN	1
					END OF FIGURE	

BEREGINI BEREGINI BEREGINI

MAINTAINER

ARMOR, SUPPLEMENTAL (FTAG) - 13024772

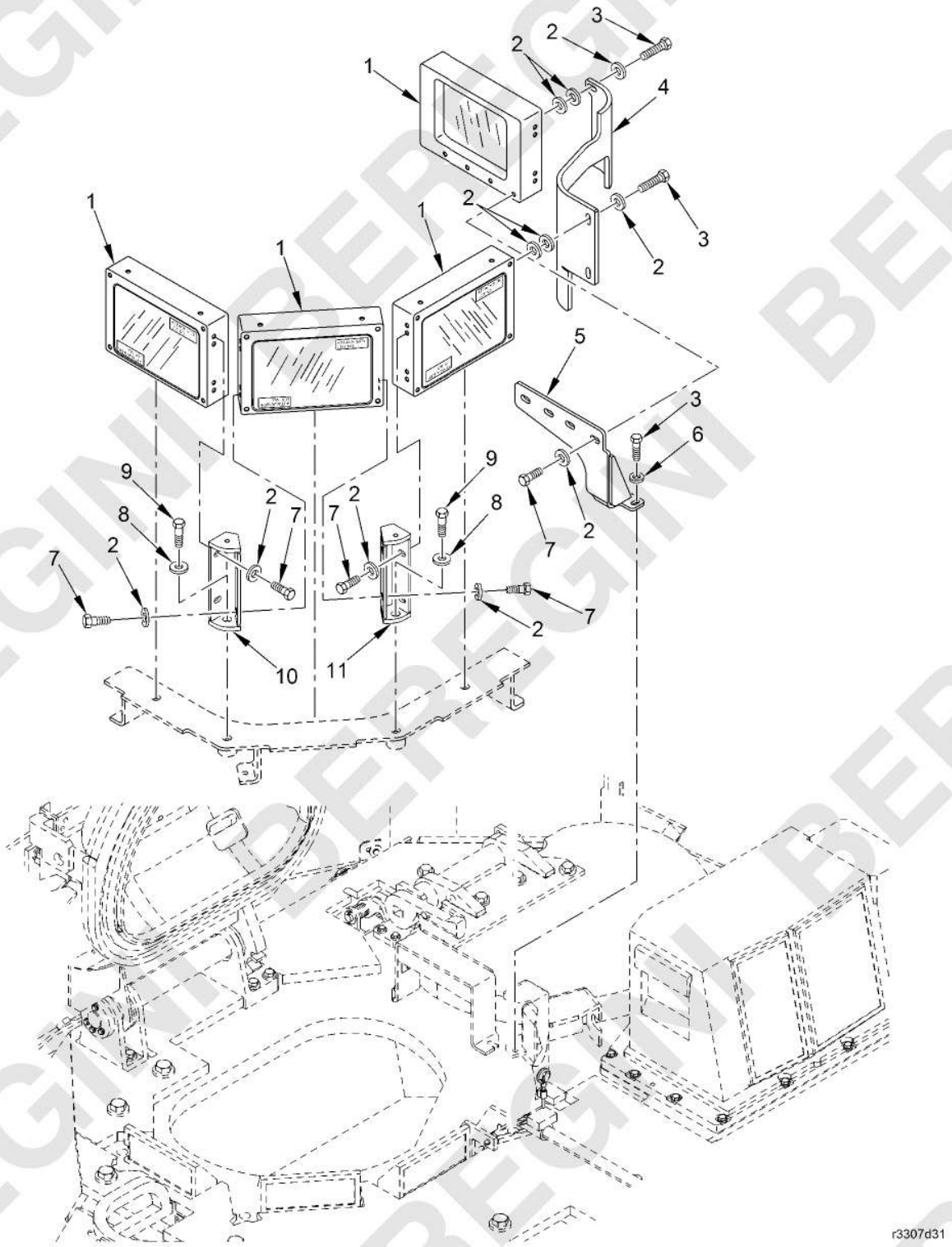

Figure 189. Armor, Supplemental (FTAG) - 13024772
(Sheet 1 of 2)

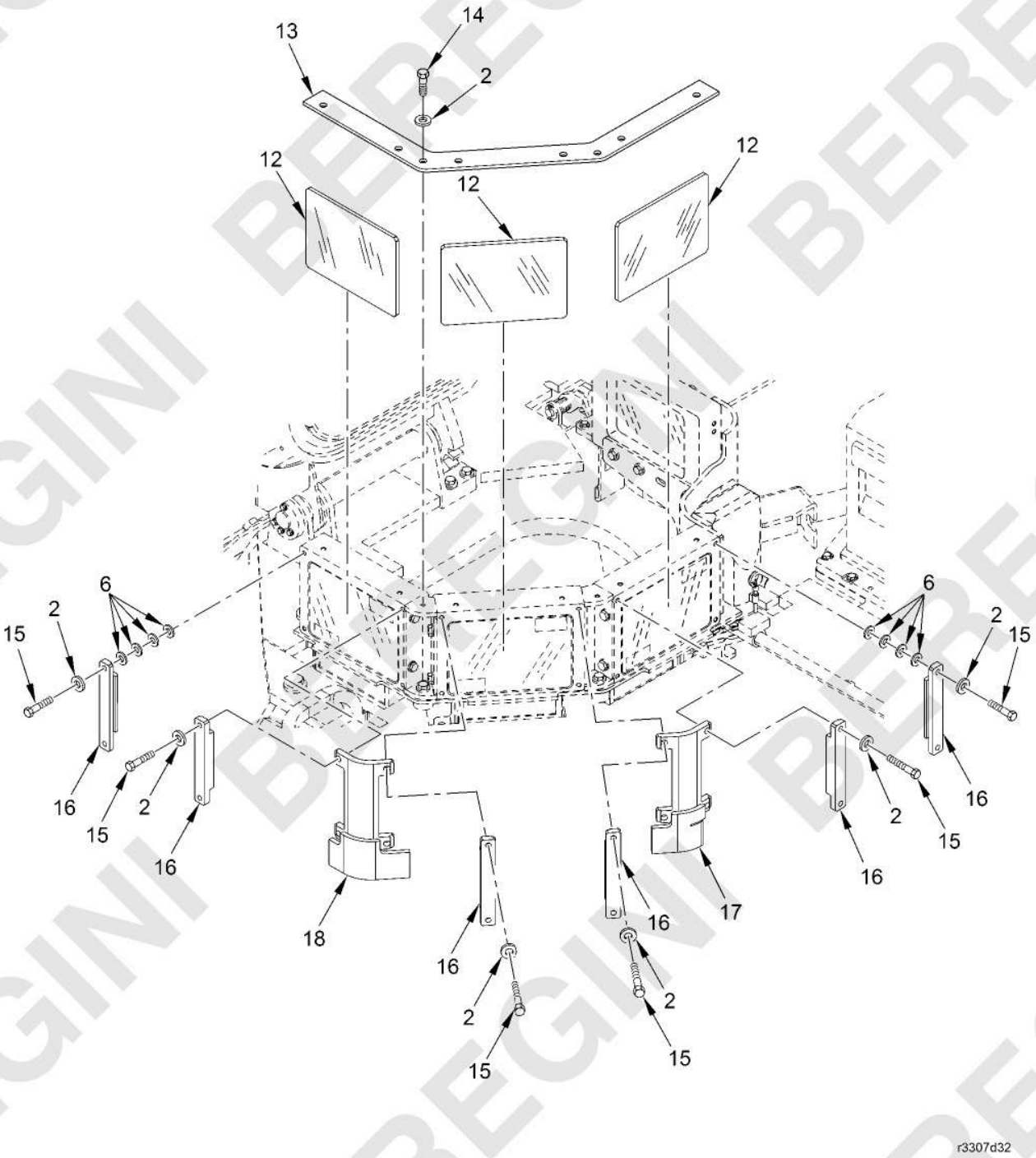

Figure 189. Armor, Supplemental (FTAG) - 13024772
(Sheet 2 of 2)

(1) ITEM NO.	(2) SMR CODE	(3) NSN	(4) CAGEC	(5) PART NUMBER	(6) DESCRIPTION AND USABLE ON CODE (UOC)	(7) QTY
					GROUP FTAG SUPPLEMENTAL ARMOR	
					FIGURE 189 Armor, Supplemental (FTAG) - 13024772	
1	PAFZZ	2510-01-564-5236	19200	13015179	WINDOW ASSEMBLY ..... UOC: BSA	4
2	PAFZZ	5310-01-381-9948	19207	12387327-22	WASHER,FLAT ..... UOC: BSA	43
3	PAFZZ	5305-00-068-0511	05047	AES01C375A25AZ0A86	SCREW,CAP,HEXAGON H ..... UOC: BSA	6
4	PAFZZ	2540-01-564-3164	19200	13020221	ARMOR PLATE ..... UOC: BSA	1
5	PAFZZ	5340-01-564-4382	19200	13015185	BRACKET,MOUNTING ..... UOC: BSA	1
6	PAFZZ	5310-01-373-2547	19207	12387327-3	WASHER,FLAT ..... UOC: BSA	18
7	PAFZZ	5305-00-068-0510	80204	B1821BH038C100N	SCREW,CAP,HEXAGON H ..... UOC: BSA	11
8	PAFZZ	5310-01-379-9663	19207	12387327-31	WASHER,FLAT ..... UOC: BSA	2
9	PAFZZ	5305-00-724-7220	80204	B1821BH063C150N	SCREW,CAP,HEXAGON H ..... UOC: BSA	2
10	PAFZZ	5340-01-564-4299	19200	13015169	SUPPORT ..... UOC: BSA	1
11	PAFZZ	5340-01-564-3167	19200	13015168	SUPPORT ..... UOC: BSA	1
12	PAFZZ	2540-01-564-9987	19200	13015177	SHIELD, DEBRIS ..... UOC: BSA	3
13	PAFZZ	2540-01-564-3174	19200	13015176	ARMOR PLATE ..... UOC: BSA	1
14	PAFZZ	5305-01-140-9118	80204	B1821BH038C088N	SCREW,CAP,HEXAGON H ..... UOC: BSA	8
15	PAFZZ	5305-00-821-3869	05047	AES01C375A75AW9A91	SCREW,CAP,HEXAGON H ..... UOC: BSA	12
16	PAFZZ	5340-01-564-3190	19200	13015173	RETAINER, DEBRIS ..... UOC: BSA	6
17	PAFZZ	5340-01-564-3187	19200	13015174	ARMOR SUPPORT ..... UOC: BSA	1
18	PAFZZ	5340-01-564-3616	19200	13015175	ARMOR SUPPORT ..... UOC: BSA	1
					END OF FIGURE	

MAINTAINER

SIGHT SHIELD/DOOR INSTL (FTAH) - 12956673, 12956673-1

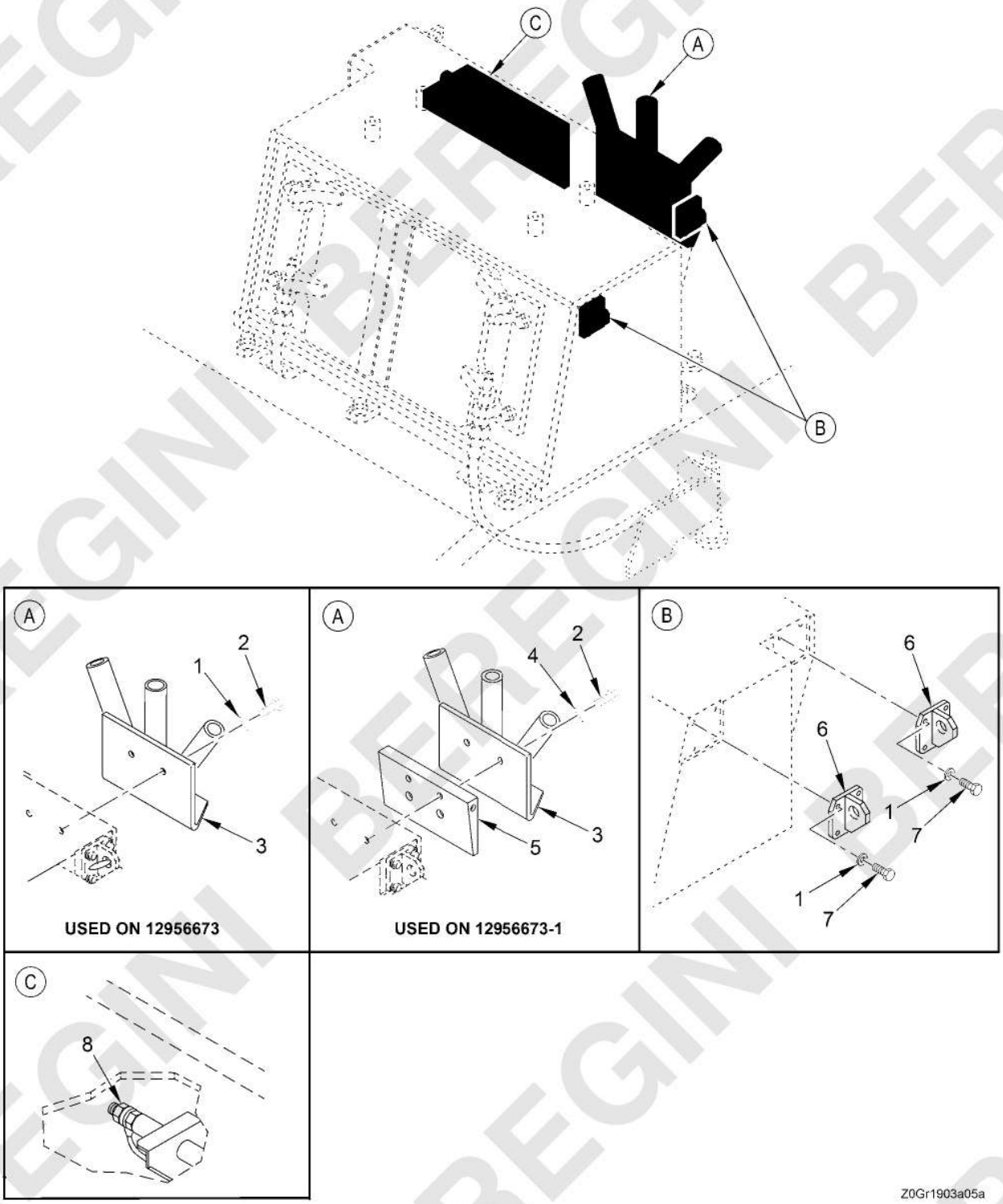

Figure 190. Sight Shield/Door Instl (FTAH) - 12956673, 12956673-1
(Sheet 1 of 3)

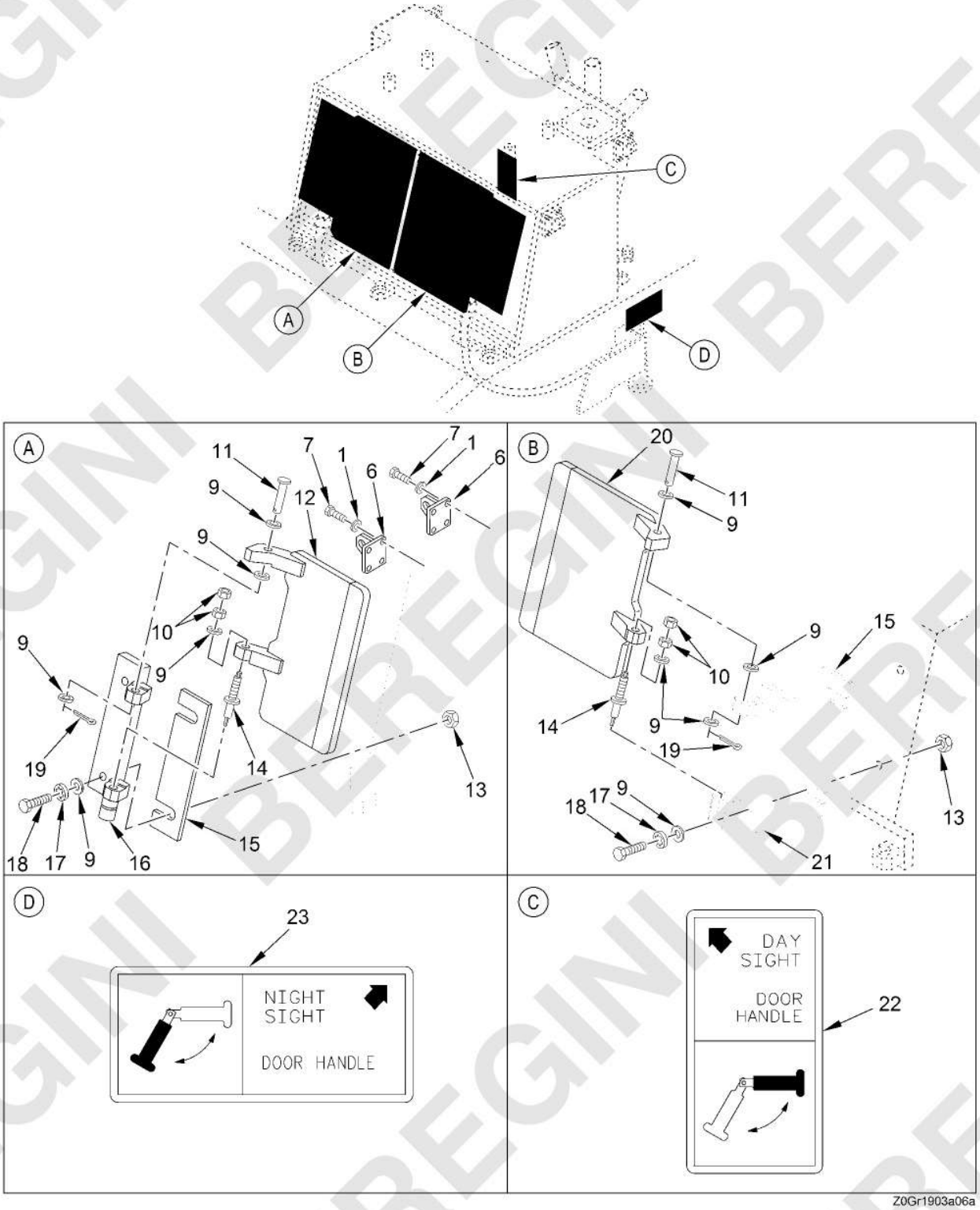

Figure 190. Sight Shield/Door Instl (FTAH) - 12956673, 12956673-1
(Sheet 2 of 3)

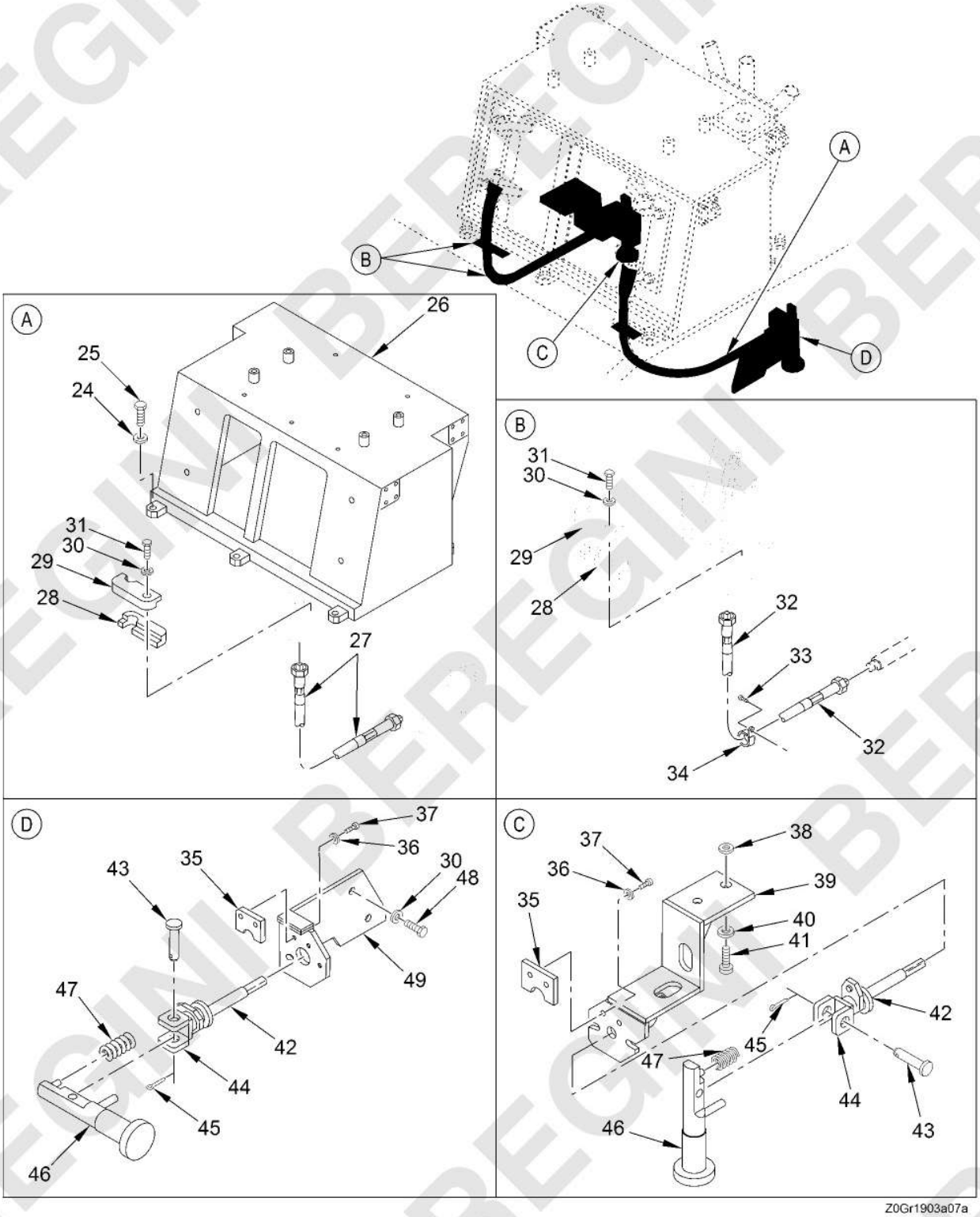

Figure 190. Sight Shield/Door Instl (FTAH) - 12956673, 12956673-1
(Sheet 3 of 3)

(1) ITEM NO.	(2) SMR CODE	(3) NSN	(4) CAGEC	(5) PART NUMBER	(6) DESCRIPTION AND USABLE ON CODE (UOC)	(7) QTY
					GROUP FTAH SIGHT SHIELD/DOOR INSTL	
					FIGURE 190 Sight Shield/Door Instl (FTAH) - 12956673, 12956673-1	
1	PAFZZ	5310-00-582-5677	80205	MS15795-810	WASHER,FLAT	18
2	PAFZZ	5305-00-068-0508	05047	AES01C250750AW9A91	SCREW,CAP,HEXAGON H USED ON 12956673	2
2	PAFZZ	5305-00-068-0508	05047	AES01C250750AW9A91	SCREW,CAP,HEXAGON H USED ON 12956673-1	4
3	PAFZZ	1005-01-126-7801	19207	12307255	HOLDER,FLAGSTAFF	1
4	PAFZZ	5310-01-274-3255	96906	MS27183-52	WASHER,FLAT	4
5	PAFZZ	5340-01-526-6503	19200	12994822	BRACKET,MOUNTING	1
6	PAFZZ	5340-01-319-8993	19200	9380480	BRACKET,MOUNTING	4
7	PAFZZ	5305-00-225-3843	80204	B1821BH025C100N	SCREW,CAP,HEXAGON H	16
8	XCFFF		19200	12956676	DEFOGGER INSTL SEE FIG. 191 FOR BREAKDOWN	1
9	PAFZZ	5310-00-866-4417	19207	10910174-5	WASHER,FLAT	12
10	PAFZZ	5310-00-834-8732	96906	MS35691-33	NUT,PLAIN,HEXAGON MAKE FROM HOSE P/N 8724783 (19207)	4
11	PAFZZ	5315-00-957-0763	96906	MS20392-7C65	PIN,STRAIGHT,HEADED	2
12	PAFZZ	5340-01-460-6884	19200	12956701	COVER,ACCESS	1
13	PAFZZ	5310-00-768-0318	96906	MS51967-14	NUT,PLAIN,HEXAGON	4
14	PAFZZ	3040-01-313-0707	19200	9380308	SHAFT,SHOULDERED	2
15	PAFZZ	5365-01-457-0231	06085	12976080	SPACER,PLATE	2
16	PAFZZ	2510-01-457-0134	06085	12976079	HINGE,HATCH,VEHICUL	1
17	PAFZZ	5310-00-194-1483	80205	MS35333-44	WASHER,LOCK	4
18	PAFZZ	5305-00-071-2071	05047	AES02C500B00AW9A81	SCREW,CAP,HEXAGON H	4
19	PAFZZ	5315-01-267-7570	80205	MS24665-319	PIN,COTTER	2
20	PAFZZ	5340-01-460-6897	19200	12956702	COVER,ACCESS	1
21	PAFZZ	1005-01-456-9523	19200	12976083	HINGE,SIGHT SHIELD	1
22	PAFZZ	7690-01-458-0610	19200	12976711	MARKER,IDENTIFICATI	1
23	PAFZZ	7690-01-458-0550	19200	12976699	MARKER,IDENTIFICATI	1
24	PAFZZ	5310-01-103-2587	19200	10910174-31	WASHER,FLAT	5
25	PAFZZ	5305-00-724-7220	80204	B1821BH063C150N	SCREW,CAP,HEXAGON H	5
26	PBFZZ	1240-01-458-0220	19200	12956674	HOUSING,FIRE CONTRO	1
27	PAFZZ	3040-01-457-0461	19200	12976082-2	SHAFT,DRIVE,FLEXIBL	1

(1) ITEM NO.	(2) SMR CODE	(3) NSN	(4) CAGEC	(5) PART NUMBER	(6) DESCRIPTION AND USABLE ON CODE (UOC)	(7) QTY
28	PAFZZ	5340-01-313-0702	19200	9380317	COVER,ACCESS	2
29	PAFZZ	5340-01-313-0701	19200	9380312	COVER,ACCESS	2
30	PAFZZ	5310-00-987-1294	19207	10910174-16	WASHER,FLAT	4
31	PAFZZ	5305-00-688-2111	05047	AES01C375A37AW9A91	SCREW,CAP,HEXAGON H	2
32	PAFZZ	3040-01-457-0460	19200	12976082-1	SHAFT,DRIVE,FLEXIBL	1
33	PAFZZ	5305-00-984-6209	80205	MS35206-262	SCREW,MACHINE	1
34	PAFZZ	5340-00-664-8163	81343	AS21919WDG11	CLAMP,LOOP	1
35	PAFZZ	3040-01-318-2958	19200	9380511	PLATE,RETAINING,SHA	2
36	PAFZZ	5310-00-865-9513	19207	10910174-1	WASHER,FLAT	4
37	PAFZZ	5305-00-988-7613	80205	MS16995-49	SCREW,CAP,SOCKET HE	4
38	PAFZZ	5310-00-080-6004	96906	MS27183-14	WASHER,FLAT	2
39	PAFZZ	2510-01-546-3315	19200	12986343	BRACKET,MOUNTING	1
40	PAFZZ	5310-00-728-9957	19207	10910174-22	WASHER,FLAT	2
41	PAFZZ	5305-00-543-2419	05047	AES01C375A12AW9A91	SCREW,CAP,HEXAGON H	2
42	PAFZZ	3120-01-130-3289	81343	M81934/1-08C028	BEARING,SLEEVE	2
43	PAFZZ	5315-00-812-3685	80205	MS20392-4C37	PIN,STRAIGHT,HEADED	2
44	PAFZZ	3040-01-312-5315	19200	9380322	SHAFT,SHOULDERED	2
45	PAFZZ	5315-00-187-9377	80205	MS24665-317	PIN,COTTER	2
46	PAFZZ	5340-01-312-1015	19200	9380326	HANDLE,MANUAL CONTR	2
47	PAFZZ	5360-01-318-7702	19200	9380548	SPRING,HELICAL,COMP	2
48	PAFZZ	5305-00-068-0510	80204	B1821BH038C100N	SCREW,CAP,HEXAGON H	2
49	PAFZZ	5340-01-474-0736	19200	12986309	BRACKET,MOUNTING	1
					END OF FIGURE	

MAINTAINER

DEFOGGER INSTL (FTAHA) - 12956676

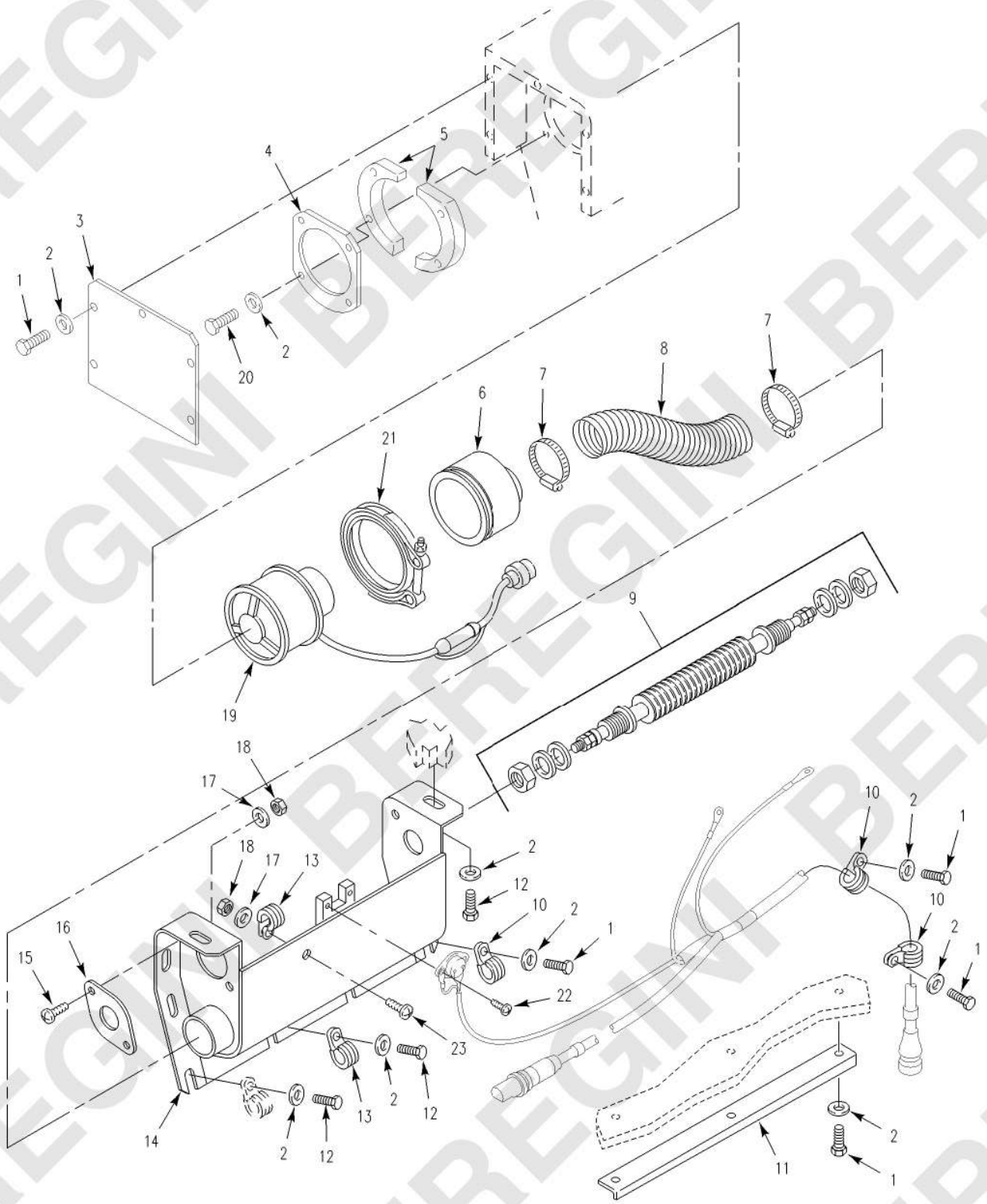

Figure 191. Defogger Instl (FTAHA) - 12956676

(1) ITEM NO.	(2) SMR CODE	(3) NSN	(4) CAGEC	(5) PART NUMBER	(6) DESCRIPTION AND USABLE ON CODE (UOC)	(7) QTY
					GROUP FTAHA DEFOGGER INSTL	
					FIGURE 191 Defogger Instl (FTAHA) - 12956676	
1	PAFZZ	5305-00-068-7837	05047	AEB02C250625WA6AA1	SCREW,CAP,HEXAGON H	10
2	PAFZZ	5310-00-809-4058	96906	MS27183-10	WASHER,FLAT	24
3	PAFZZ	2540-01-457-3265	19200	12976089	GUARD,FAN,VEHICLE	1
4	PAFZZ	2540-01-457-3251	19200	12976087	RETAINER,FAN	1
5	PAFZZ	5365-01-111-4073	19207	12297598	SPACER,PLATE	2
6	PAFZZ	4140-01-460-6814	19200	12976345	ADAPTER,FAN	1
7	PAFZZ	4730-00-908-3193	58536	A-A-52506-F-24	CLAMP,HOSE	2
8	MFFZZ		19207	10886500	HOSE,AIR DUCT MAKE FROM HOSE P/N 8724783(19207), 6.50-6.75 IN LG	1
9	PAFZZ	1005-01-110-3408	19207	12295607	HEATER,ELECTRICAL R	1
10	PAFZZ	5340-00-993-6207	96906	MS21333-99	CLAMP,LOOP	3
11	PAFZZ	5340-01-112-8487	19207	12297631	BRACKET,ANGLE	1
12	PAFZZ	5305-00-071-2506	05047	AES01C250500AW9A91	SCREW,CAP,HEXAGON H	10
13	PAFZZ	5340-00-809-1490	80205	MS21333-98	CLAMP,LOOP	2
14	PAFZZ	2540-01-457-3267	19200	12976090	DUCT ASSEMBLY,AIR C	1
15	PAFZZ	5305-00-989-7435	80205	MS35207-264	SCREW,MACHINE	2
16	PAFZZ	3110-01-466-6066	19200	12976088	PLATE,RETAINING,BEA	1
17	PAFZZ	5310-00-014-5850	96906	MS27183-42	WASHER,FLAT	3
18	PAFZZ	5310-00-877-5797	80205	MS21044N3	NUT,SELF-LOCKING,HE	3
19	PAFFF	1005-01-114-2298	19207	12295021	FAN ASSEMBLY,VANEAX	1
20	PAFZZ	5305-00-071-2510	80204	B1821BH025C175N	SCREW,CAP,HEXAGON H	4
21	PAFZZ	5342-00-072-0218	80064	2587562	COUPLING,CLAMP,GROO	1
22	PAFZZ	5305-00-889-2997	80205	MS35206-215	SCREW,MACHINE	2
23	PAFZZ	5305-00-989-7434	80205	MS35207-263	SCREW,MACHINE	1
					END OF FIGURE	

0192-3/4 blank

BEREGINI BEREGINI BEREGINI

MAINTAINER

FAN ASSEMBLY, VANEAXIAL (FTAHAA) - 12295021

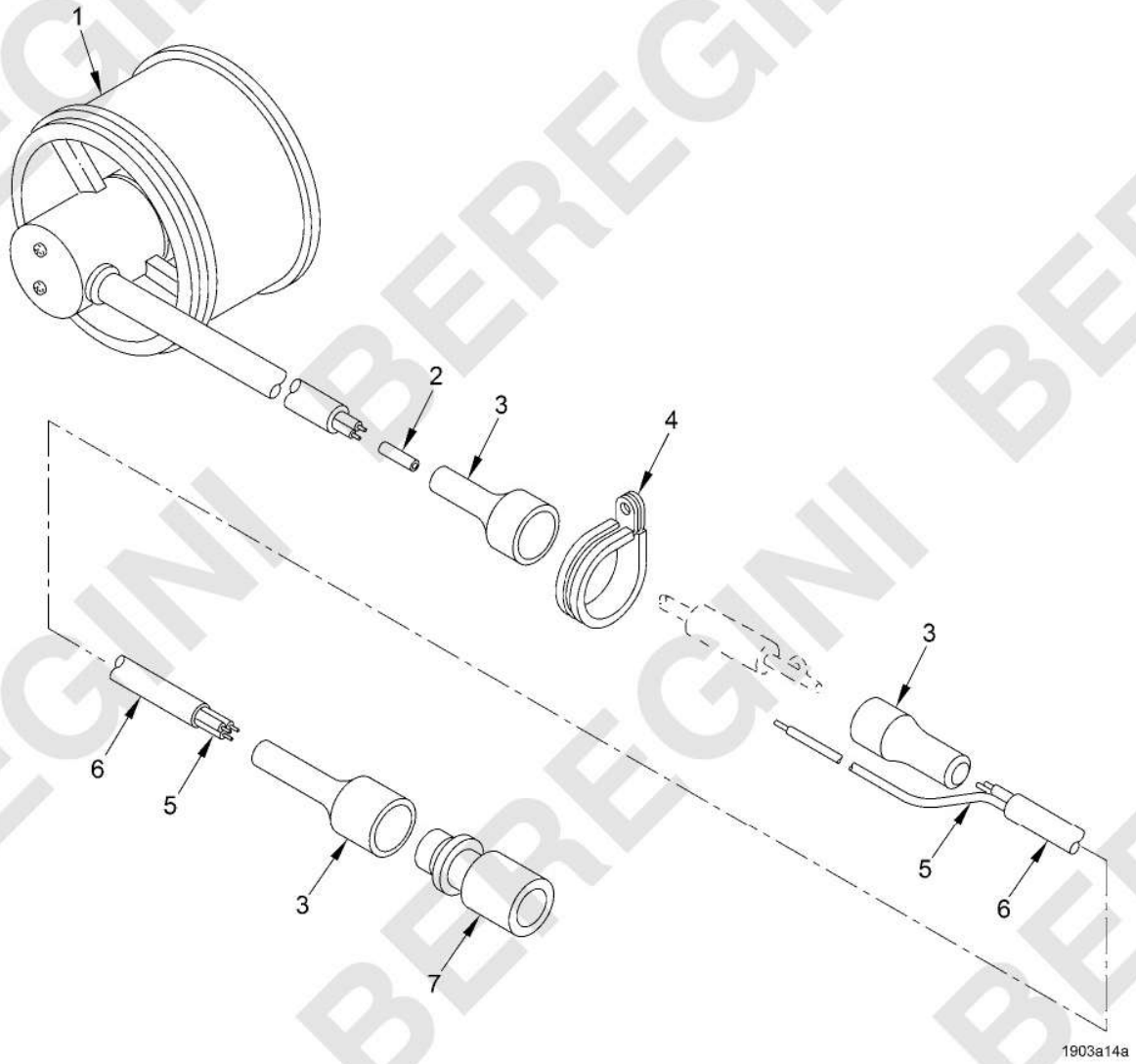

Figure 192. Fan Assembly, Vaneaxial (FTAHAA) - 12295021

(1) ITEM NO.	(2) SMR CODE	(3) NSN	(4) CAGEC	(5) PART NUMBER	(6) DESCRIPTION AND USABLE ON CODE (UOC)	(7) QTY
					GROUP FTAHAA VANEAXIAL FAN ASSEMBLY	
					FIGURE 192 Fan Assembly, Vaneaxial (FTAHAA) - 12295021	
1	XAFZZ		19207	12295491	BLOWER	1
2	PAFZZ	5940-01-136-2540	81343	M83519/1-2	SPLICE,CONDUCTOR	1
3	PAFZZ	1005-01-118-8602	19207	12295744-2	CONNECTOR,BOOT	3
4	PAFZZ	5340-00-597-0182	96906	MS21333-39	CLAMP,LOOP	1
5	MFFZZ		81349	M81044/9-20-9	WIRE,ELECTRICAL MAKE FROM WIRE P/N M81044/9-20-9 (81349)	1
6	MFFZZ		81343	M23053/5-106-0	INSULATION SLEEVING MAKE FROM INSULATION P/N M23053/5-106-0 (81343)	1
7	PAFZZ	5935-01-112-3631	80064	2590039-3	CONNECTOR,PLUG,ELEC	1
					END OF FIGURE	

BEREGINI BEREGINI BEREGINI

MAINTAINER

TURRET STOWAGE INSTL (FTAI) - 13024673 (PRE-BUSK III), 13024673-2 (BUSK III)

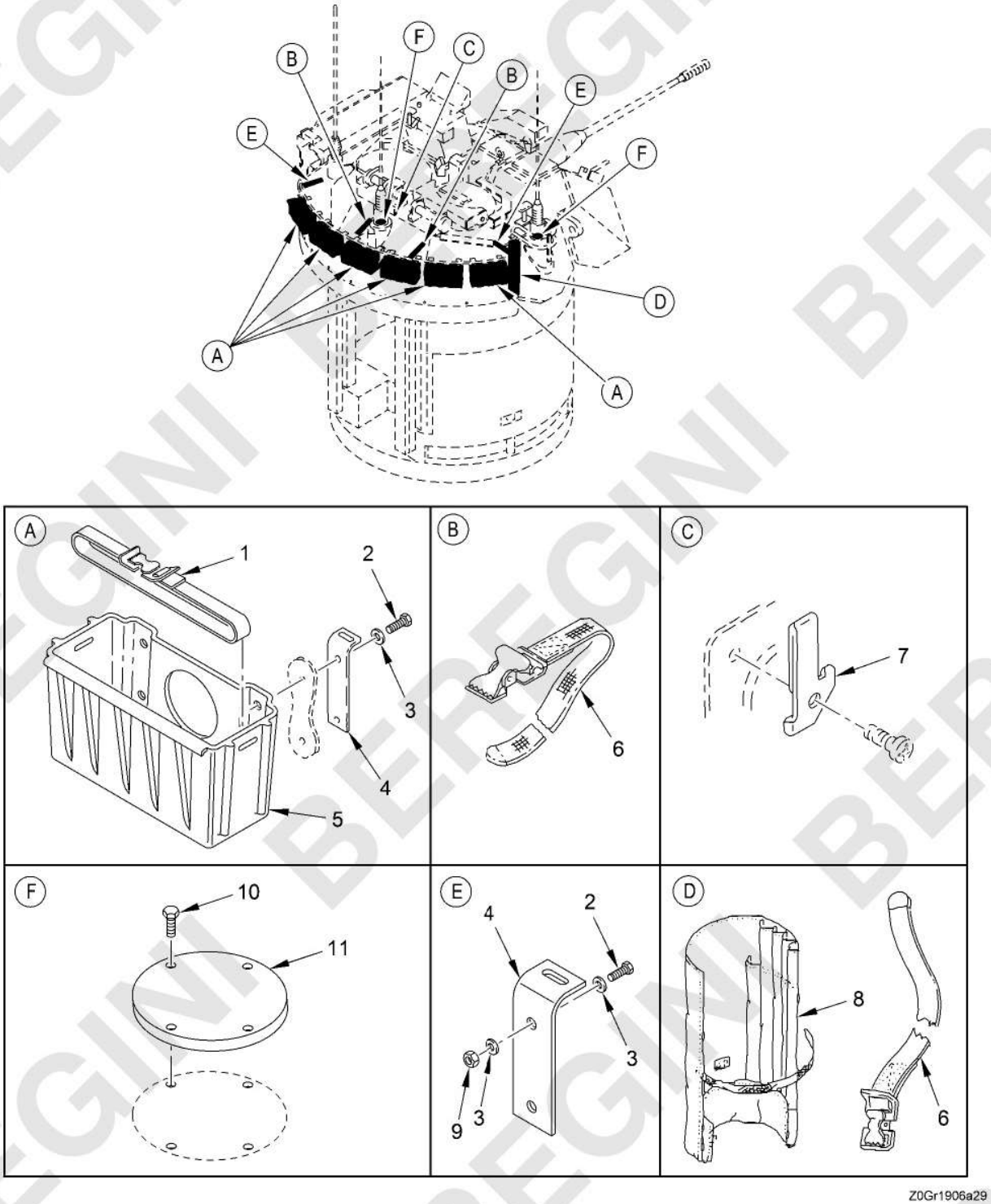

Figure 193. Turret Stowage Instl (FTAI) - 13024673 (Pre-BUSK III), 13024673-2 (BUSK III) (Sheet 1 of 4)

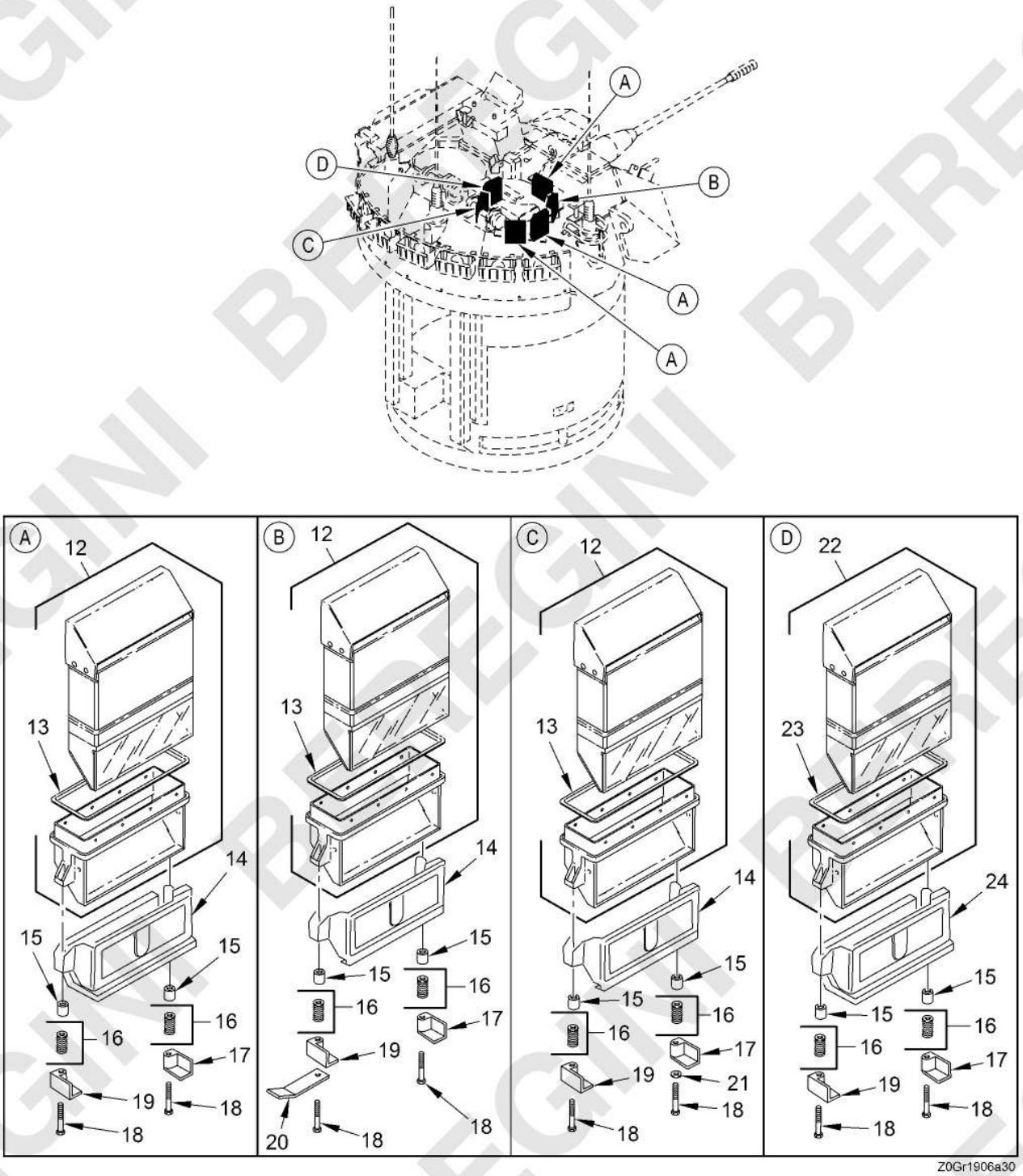

Figure 193. Turret Stowage Instl (FTAI) - 13024673 (Pre-BUSK III), 13024673-2 (BUSK III) (Sheet 2 of 4)

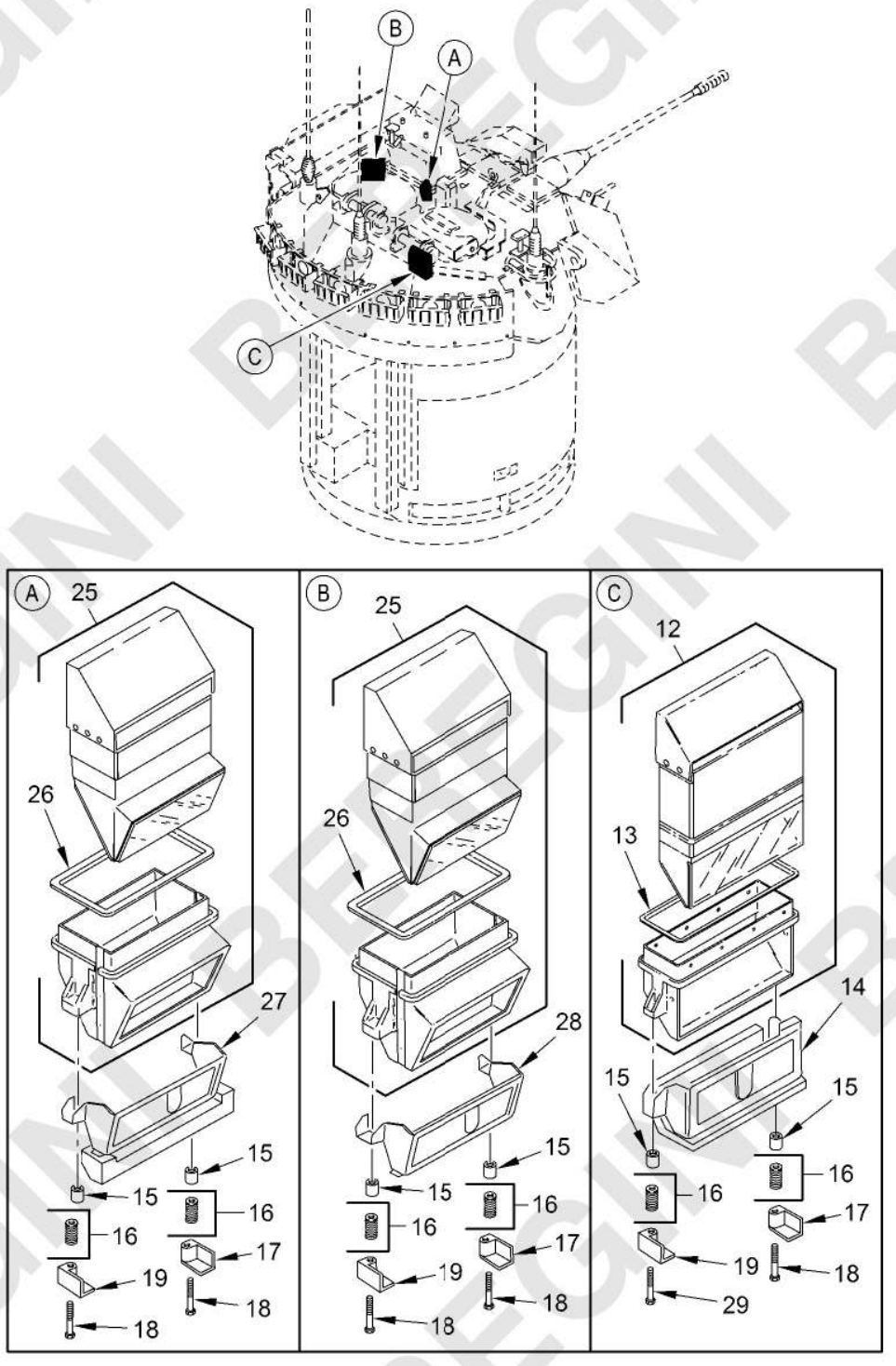

Figure 193. Turret Stowage Instl (FTAI) - 13024673 (Pre-BUSK III), 13024673-2 (BUSK III) (Sheet 3 of 4)

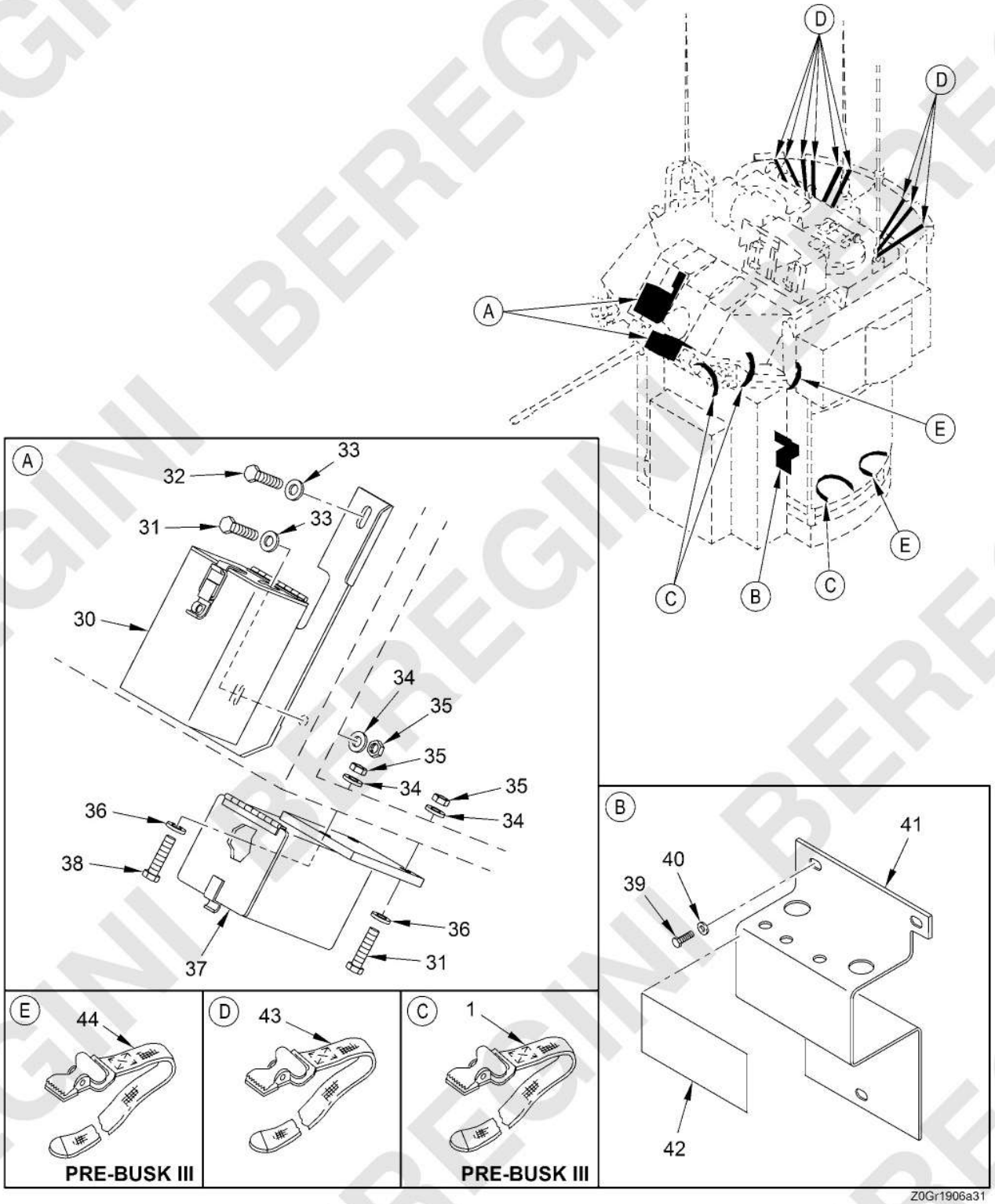

Figure 193. Turret Stowage Instl (FTAI) - 13024673 (Pre-BUSK III), 13024673-2 (BUSK III)
(Sheet 4 of 4)

(1) ITEM NO.	(2) SMR CODE	(3) NSN	(4) CAGEC	(5) PART NUMBER	(6) DESCRIPTION AND USABLE ON CODE (UOC)	(7) QTY
					GROUP FTAI TURRET STOWAGE INSTL	
					FIGURE 193 Turret Stowage Instl (FTAI) - 13024673 (Pre-BUSK III), 13024673-2 (BUSK III)	
1	PAFZZ	5340-00-753-3745	19207	8690477	STRAP,WEBBING BUSK III UOC: BSA	6
2	PAFZZ	5305-00-225-3841	05047	AES01C250A37AW9A91	SCREW,CAP,HEXAGON H UOC: BSA	28
3	PAFZZ	5310-00-058-1305	19207	10910174-20	WASHER,FLAT UOC: BSA	28
4	PAFZZ	5340-01-273-9358	19200	9379960	BRACKET,ANGLE UOC: BSA	14
5	PAFZZ	5340-01-312-1019	19200	9380277	BRACKET,MOUNTING UOC: BSA	6
6	PAFZZ	5340-00-664-0364	19207	8690469	STRAP,WEBBING	3
7	PAFZZ	1005-01-166-9652	19207	12308954	HOOK,HELMET	1
8	PAFZZ	5140-01-218-6176	19200	9379619	ROLL,TOOLS AND ACCE	8
9	PAFZZ	5310-01-531-7280	81349	M45913/1-4CG8Z	NUT,SELF-LOCKING,HE BUSK III UOC: BSA	4
10	PAFZZ	5305-01-449-7391	80204	B1821BH038C325L	SCREW,CAP,HEXAGON H UOC: BSA	1
11	PAFZZ	5340-01-117-3561	19207	12297929	COVER,ACCESS UOC: BSA	2
12	PAFZZ	6650-01-317-9138	19207	12357918	PERISCOPE,ARMORED V UOC: BSA	6
13	PAFZZ	5330-00-900-8006	19207	10940477	.SEAL,NONMETALLIC SP	1
14	PAFZZ	1005-01-115-9003	19207	12307300	FRAME,BLACKOUT UOC: BSA	6
15	PAFZZ	5365-01-172-7899	19207	12328555	SPACER,SLEEVE UOC: BSA	18
16	PAFZZ	5310-00-167-0804	80205	NAS1149C0663R	WASHER,FLAT UOC: BSA	107
17	PAFZZ	5340-01-106-8001	19207	12296863-1	BRACKET,MOUNTING UOC: BSA	9
18	PAFZZ	5306-01-330-9744	80204	B1821BH038C300L	BOLT,MACHINE UOC: BSA	17
19	PAFZZ	5340-01-106-8002	19207	12296863-2	BRACKET,MOUNTING UOC: BSA	9
20	PAFZZ	5340-01-122-9745	19207	12297541	BRACKET,ANGLE	1
21	PAFZZ	5310-00-877-5972	19200	10910174-3	WASHER,FLAT	1
22	PAFZZ	1240-01-319-8995	19200	12357792	PERISCOPE,ARMORED V	1

(1) ITEM NO.	(2) SMR CODE	(3) NSN	(4) CAGEC	(5) PART NUMBER	(6) DESCRIPTION AND USABLE ON CODE (UOC)	(7) QTY
23	PAFZZ	5330-00-900-8006	19207	10940477	.SEAL,NONMETALLIC SP	1
24	PAFZZ	1005-01-116-3172	19207	12307299	FRAME,BLACKOUT	1
25	PAFZZ	1240-01-319-8994	19207	12357909	PERISCOPE,ARMORED V	2
26	PAFZZ	5330-01-218-6180	19207	12308242	.SEAL,NONMETALLIC SP	2
27	PAFZZ	1005-01-167-4597	19207	12307298	FRAME,BLACKOUT	1
28	PAFZZ	1005-01-114-3074	19207	12308477	FRAME,BLACKOUT	1
29	PAFZZ	5305-01-457-5175	05047	AES01C375A12AW9A9B	SCREW,CAP,HEXAGON H UOC: BSA	8
30	PAFFF	8140-01-423-1436	19200	12933629	BOX,AMMUNITION SEE FIG. 195 FOR BREAKDOWN	1
31	PAFZZ	5305-00-071-2076	05047	AES01C500C25AW9A91	SCREW,CAP,HEXAGON H	3
32	PAFZZ	5305-00-071-2074	80204	B1821BH050C275N	SCREW,CAP,HEXAGON H	1
33	PAFZZ	5310-00-143-6394	19207	10941915-6	WASHER,FLAT	2
34	PAFZZ	5310-00-866-4417	19207	10910174-5	WASHER,FLAT	4
35	PAFZZ	5310-00-225-6993	81349	M45913/1-8CG5C	NUT,SELF-LOCKING,HE	4
36	PAFZZ	5310-00-435-0674	19200	10910174-28	WASHER,FLAT	3
37	PAFFF	8140-01-456-2753	19200	12933724	CAN,AMMUNITION SEE FIG. 196 FOR BREAKDOWN	1
38	PAFZZ	5305-00-071-2077	05047	AES01C500C50AW9A91	SCREW,CAP,HEXAGON H	1
39	PAFZZ	5305-00-068-0508	05047	AES01C250750AW9A91	SCREW,CAP,HEXAGON H	3
40	PAFZZ	5310-00-809-4058	96906	MS27183-10	WASHER,FLAT	3
41	PAFZZ	5340-01-267-2165	19200	9379797	BRACKET,MOUNTING	1
42	PAFZZ	9905-01-267-2159	19200	9379865	PLATE,IDENTIFICATIO	1
43	PAFZZ	5340-00-894-9545	19207	8690482	STRAP,WEBBING UOC: BSA	9
44	PAFZZ	5340-00-543-3321	19207	8690474	STRAP,WEBBING PRE-BUSK III	2
					END OF FIGURE	

BEREGINI BEREGINI BEREGINI

MAINTAINER

TURRET STOWAGE INSTL (FTAI) - 12976764 (PRE-BUSK III), 12976764-5 (BUSK III)

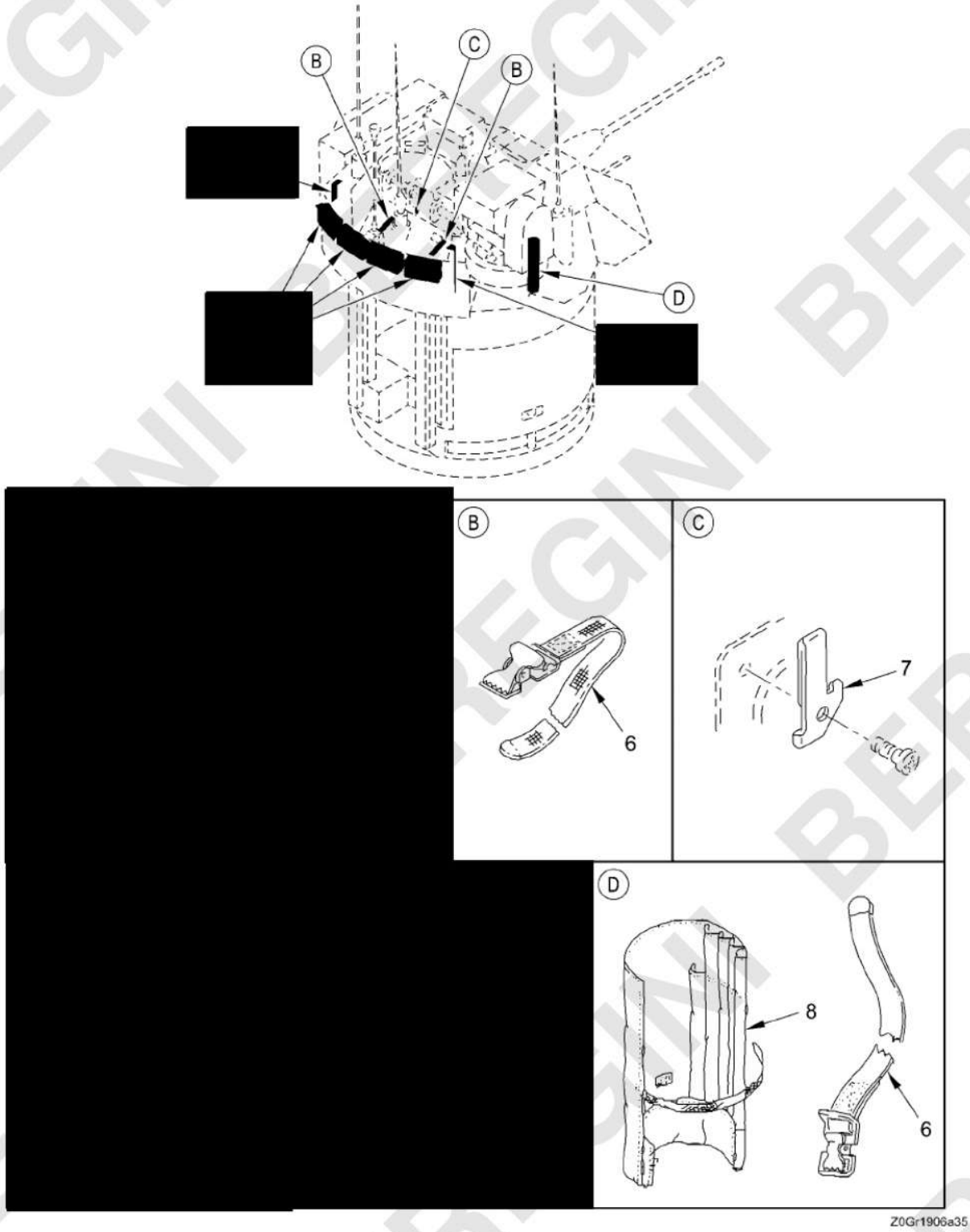

Figure 194. Turret Stowage Instl (FTAI) - 12976764 (Pre-BUSK III), 12976764-5 (BUSK III) (Sheet 1 of 3)

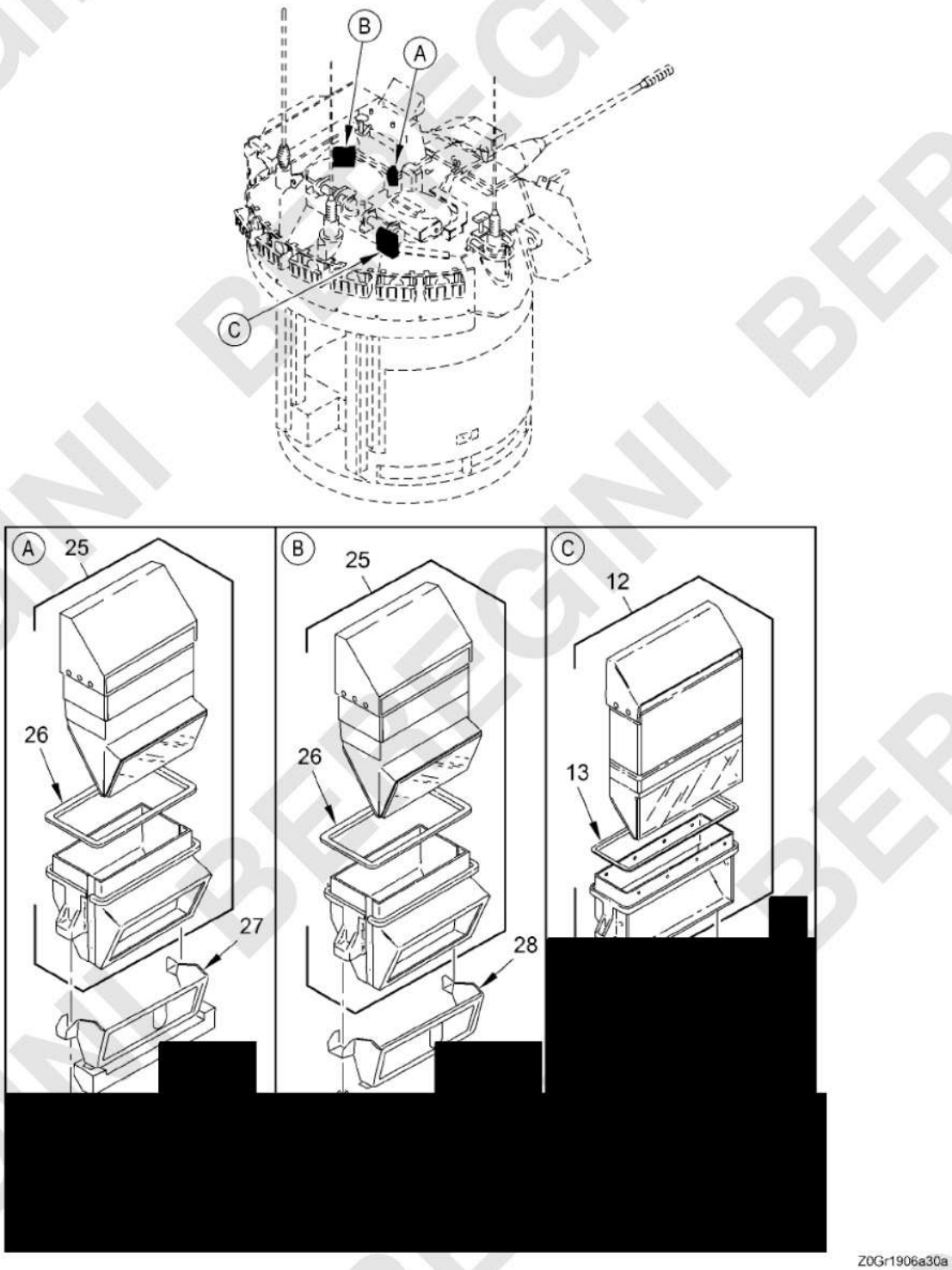

Figure 193. Turret Stowage Instl (FTAI) - 13024673 (Pre-BUSK III), 13024673-2 (BUSK III) (Sheet 3 of 4)

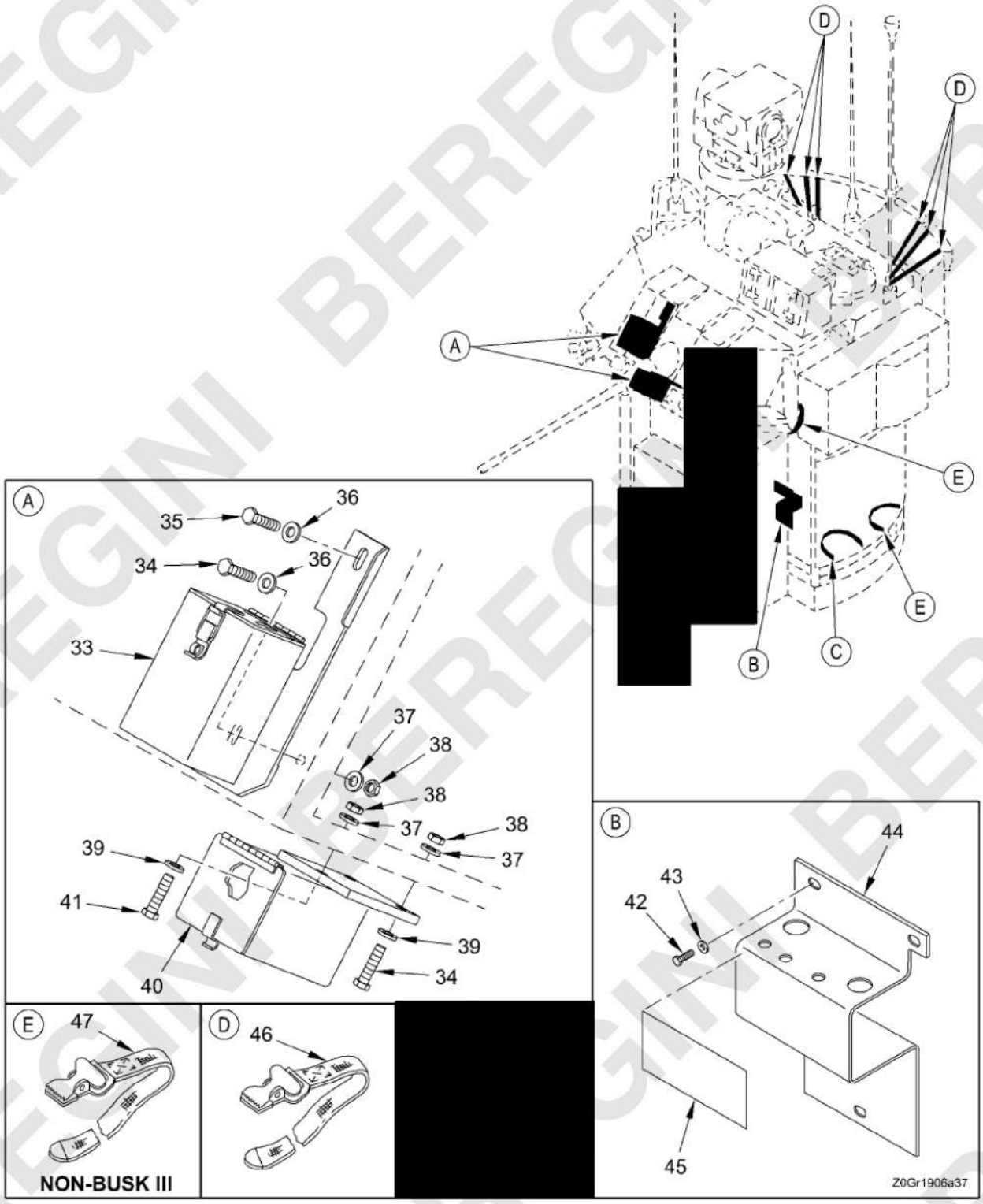

Figure 194. Turret Stowage Instl (FTAI) - 12976764 (Pre-BUSK III), 12976764-5 (BUSK III) (Sheet 3 of 3)

(1) ITEM NO.	(2) SMR CODE	(3) NSN	(4) CAGEC	(5) PART NUMBER	(6) DESCRIPTION AND USABLE ON CODE (UOC)	(7) QTY
					GROUP FTAI TURRET STOWAGE INSTL	
					FIGURE 194 Turret Stowage Instl (FTAI) - 12976764 (Pre-BUSK III), 12976764-5 (BUSK III)	
[redacted]						
6	PAFZZ	5340-00-664-0364	19207	8690469	STRAP,WEBBING	3
7	PAFZZ	1005-01-166-9652	19207	12308954	HOOK,HELMET	1
8	PAFZZ	5140-01-218-6176	19200	9379619	ROLL,TOOLS AND ACCE	1
[redacted]						

(1) ITEM NO.	(2) SMR CODE	(3) NSN	(4) CAGEC	(5) PART NUMBER	(6) DESCRIPTION AND USABLE ON CODE (UOC)	(7) QTY
[redacted]						
[redacted]						
[redacted]						
[redacted]						
24	PAFZZ	5340-01-122-9745	19207	12297541	BRACKET,ANGLE	1
25	PAFZZ	5310-00-877-5972	19200	10910174-3	WASHER,FLAT	1
26	PAFZZ	1240-01-319-8995	19200	12357792	PERISCOPE,ARMORED V	1
27	PAFZZ	5330-00-900-8006	19207	10940477	.SEAL,NONMETALLIC SP	1
28	PAFZZ	1005-01-116-3172	19207	12307299	FRAME,BLACKOUT	1
29	PAFZZ	1240-01-319-8994	19207	12357909	PERISCOPE,ARMORED V	2
30	PAFZZ	5330-01-218-6180	19207	12308242	.SEAL,NONMETALLIC SP	2
31	PAFZZ	1005-01-167-4597	19207	12307298	FRAME,BLACKOUT	1
32	PAFZZ	1005-01-114-3074	19207	12308477	FRAME,BLACKOUT	1
33	PAFFF	8140-01-423-1436	19200	12933629	BOX,AMMUNITION SEE FIG. 195 FOR BREAKDOWN	1
34	PAFZZ	5305-00-071-2076	05047	AES01C500C25AW9A91	SCREW,CAP,HEXAGON H	3
35	PAFZZ	5305-00-071-2074	80204	B1821BH050C275N	SCREW,CAP,HEXAGON H	1
36	PAFZZ	5310-00-143-6394	19207	10941915-6	WASHER,FLAT	2
37	PAFZZ	5310-00-866-4417	19207	10910174-5	WASHER,FLAT	4
38	PAFZZ	5310-00-225-6993	81349	M45913/1-8CG5C	NUT,SELF-LOCKING,HE	4
39	PAFZZ	5310-00-435-0674	19200	10910174-28	WASHER,FLAT UOC: BSA[redacted]	3
40	PAFFF	8140-01-456-2753	19200	12933724	CAN,AMMUNITION SEE FIG. 196 FOR BREAKDOWN	1
41	PAFZZ	5305-00-071-2077	05047	AES01C500C50AW9A91	SCREW,CAP,HEXAGON H	1
42	PAFZZ	5305-00-068-0508	05047	AES01C250750AW9A91	SCREW,CAP,HEXAGON H	3
43	PAFZZ	5310-00-809-4058	96906	MS27183-10	WASHER,FLAT	3
44	PAFZZ	5340-01-267-2165	19200	9379797	BRACKET,MOUNTING	1
45	PAFZZ	9905-01-267-2159	19200	9379865	PLATE,IDENTIFICATIO	1
[redacted]						
47	PAFZZ	5340-00-543-3321	19207	8690474	STRAP,WEBBING PRE-BUSK III	2

END OF FIGURE

MAINTAINER

BOX, AMMUNITION, STOWAGE (FTAIA) - 12933629

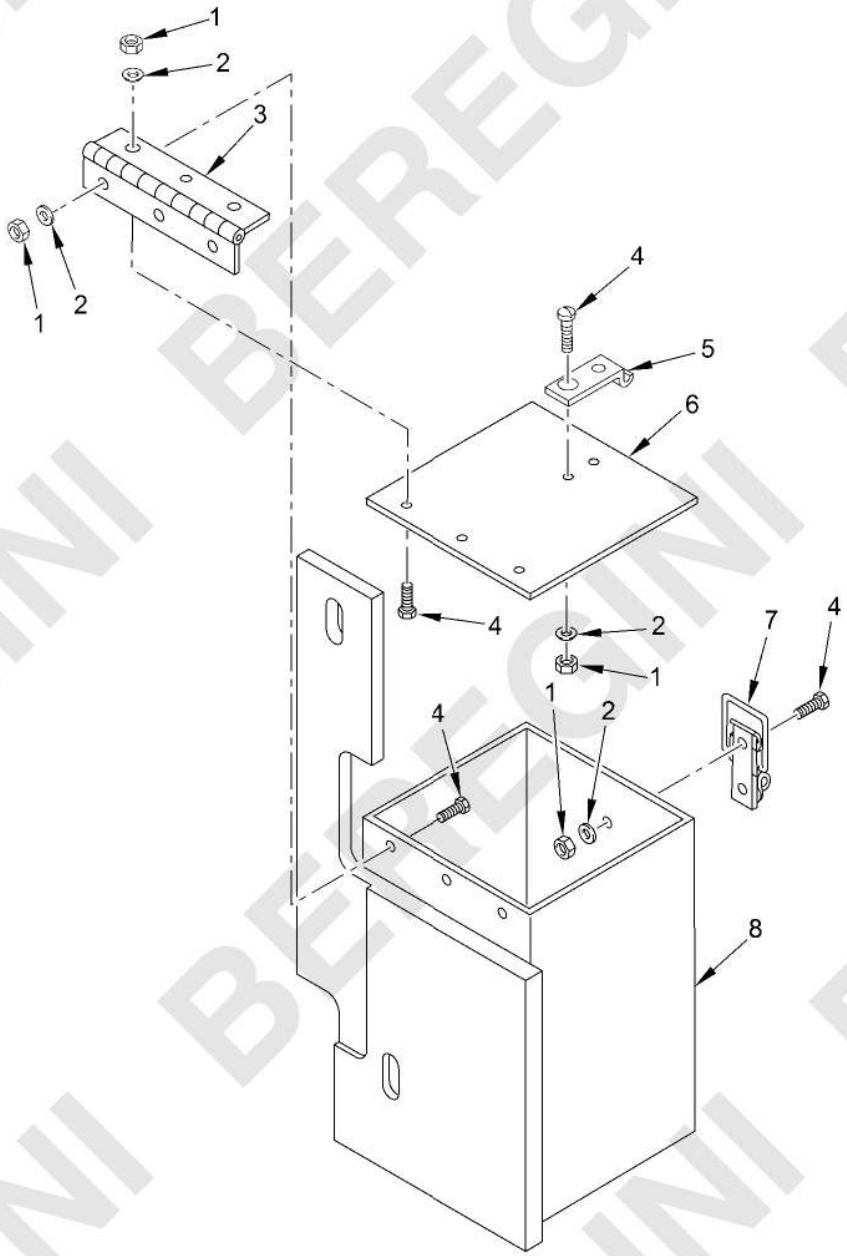

Figure 195. Box, Ammunition, Stowage (FTAIA) - 12933629

(1) ITEM NO.	(2) SMR CODE	(3) NSN	(4) CAGEC	(5) PART NUMBER	(6) DESCRIPTION AND USABLE ON CODE (UOC)	(7) QTY
					GROUP FTAIA STOWAGE AMMUNITION BOX	
					FIGURE 195 Box, Ammunition, Stowage (FTAIA) - 12933629	
1	PAFZZ	5310-00-208-9255	80205	MS21044C3	NUT,SELF-LOCKING,HE	10
2	PAFZZ	5310-00-883-9384	80205	MS15795-842	WASHER,FLAT	10
3	PAFZZ	5340-01-273-5947	19200	9380268	HINGE,ACCESS DOOR	1
4	PAFZZ	5305-00-989-7435	80205	MS35207-264	SCREW,MACHINE	10
5	PAFZZ	5340-01-108-5281	19207	12299728	STRIKE,CATCH	1
6	XAFZZ		19200	9380267	COVER,ACCESS	1
7	PAFZZ	5340-01-108-9300	19207	12299720	CATCH,CLAMPING	1
8	XAFZZ		19200	12933628	BOX,AMMUNITION	1
					END OF FIGURE	

BEREGINI BEREGINI BEREGINI

MAINTAINER

BOX, AMMUNITION, STOWAGE (FTAIB) - 12933724

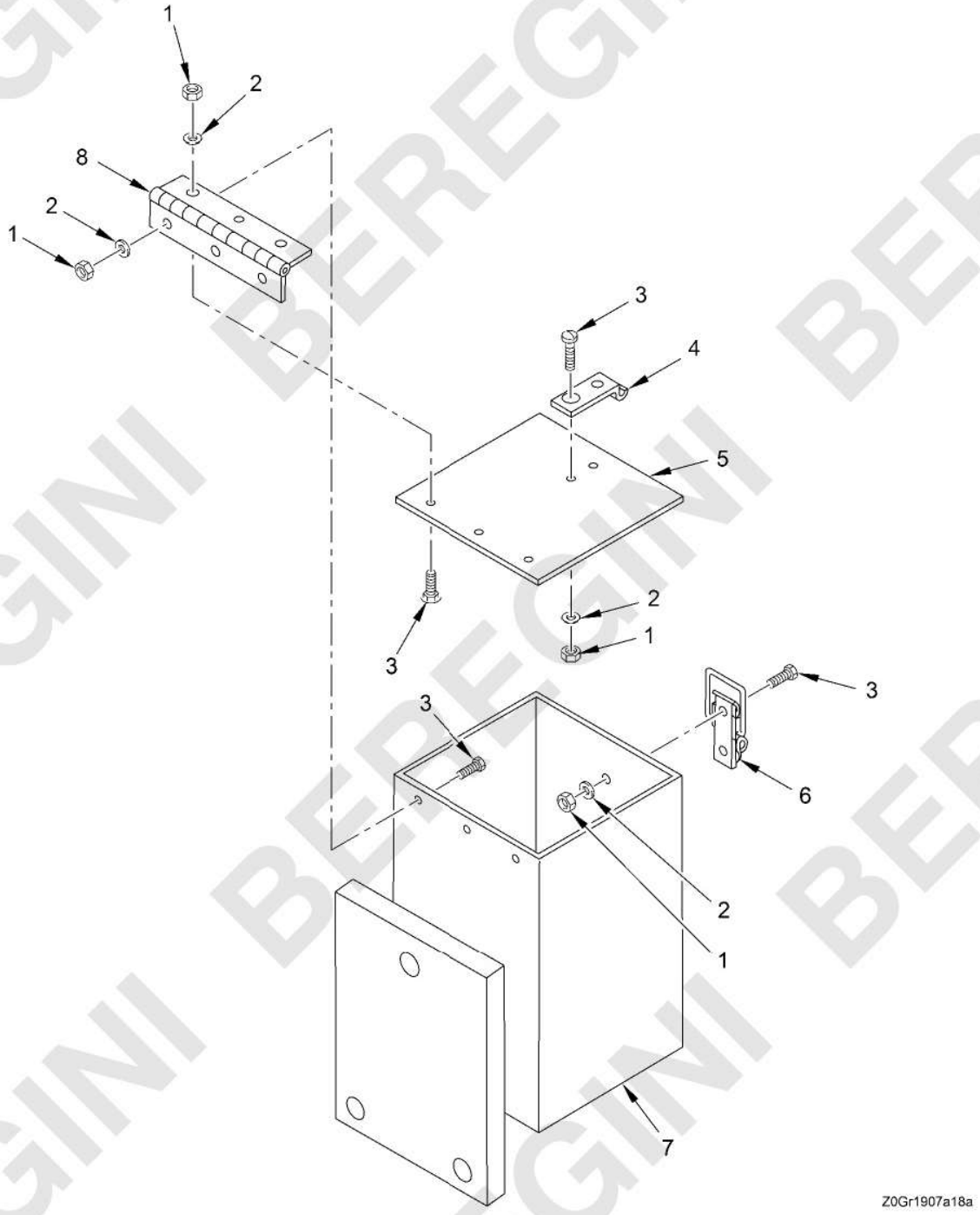

Figure 196. Box, Ammunition, Stowage (FTAIB) - 12933724

(1) ITEM NO.	(2) SMR CODE	(3) NSN	(4) CAGEC	(5) PART NUMBER	(6) DESCRIPTION AND USABLE ON CODE (UOC)	(7) QTY
					GROUP FTAIB STOWAGE AMMUNITION BOX	
					FIGURE 196 Box, Ammunition, Stowage (FTAIB) - 12933724	
1	PAFZZ	5310-00-208-9255	80205	MS21044C3	NUT,SELF-LOCKING,HE	10
2	PAFZZ	5310-00-883-9384	80205	MS15795-842	WASHER,FLAT	10
3	PAFZZ	5305-00-989-7435	80205	MS35207-264	SCREW,MACHINE	10
4	PAFZZ	5340-01-108-5281	19207	12299728	STRIKE,CATCH	1
5	XAFZZ		19200	9380267	COVER,ACCESS	1
6	PAFZZ	5340-01-108-9300	19207	12299720	CATCH,CLAMPING	1
7	XAFZZ		19200	12933723	BOX,AMMUNITION	1
8	PAFZZ	5340-01-273-5947	19200	9380268	HINGE,ACCESS DOOR	1
					END OF FIGURE	

0197-3/4 blank

BEREGINI BEREGINI BEREGINI

MAINTAINER

SEAT INSTL (PRE-BUSK III) (FTAJ) - 12334403

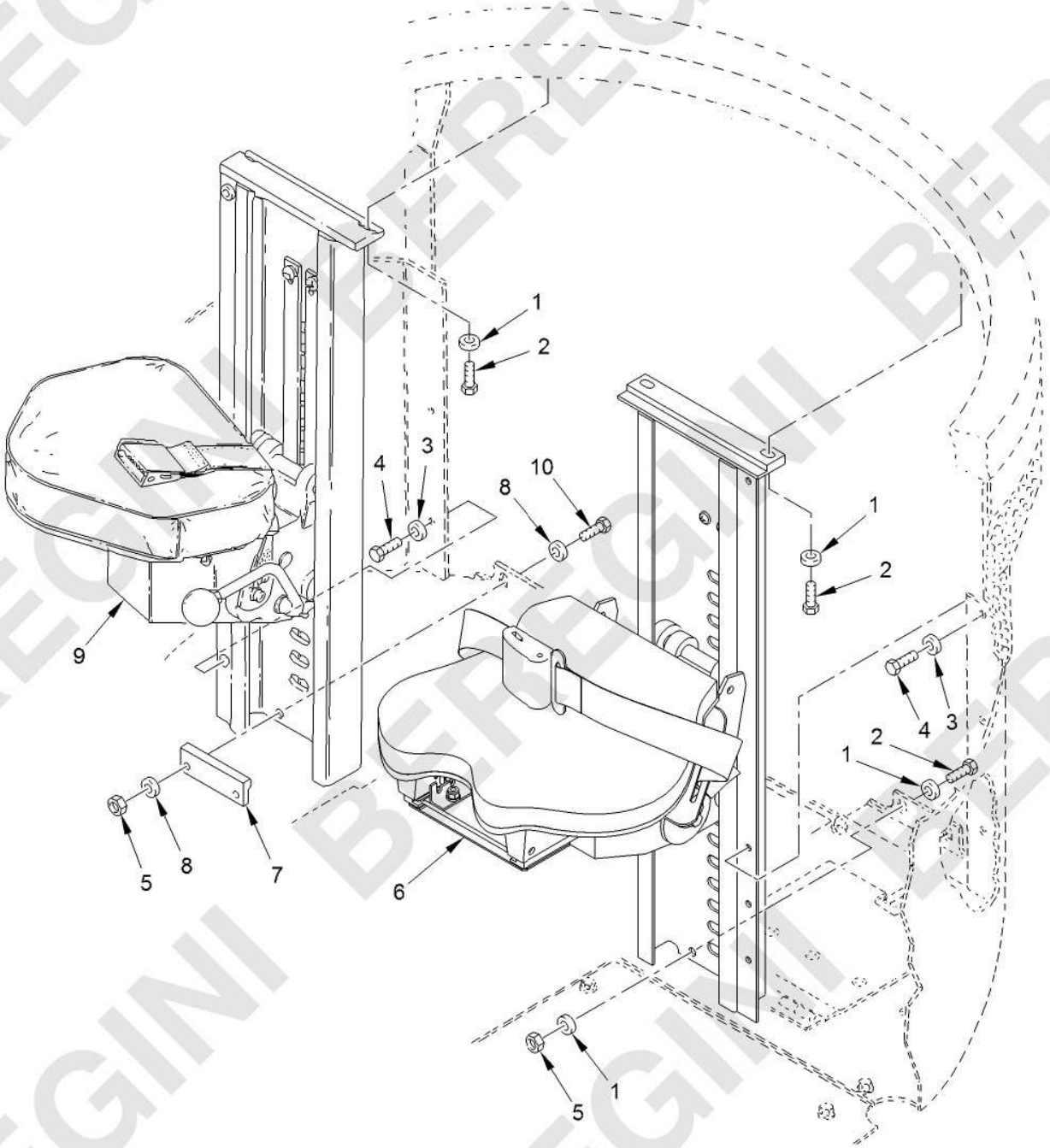

Figure 197. Seat Instl (Pre-BUSK III) (FTAJ) - 12334403

(1) ITEM NO.	(2) SMR CODE	(3) NSN	(4) CAGEC	(5) PART NUMBER	(6) DESCRIPTION AND USABLE ON CODE (UOC)	(7) QTY
					GROUP FTAJ SEAT INSTL	
					FIGURE 197 Seat Instl (Pre-BUSK III) (FTAJ) - 12334403	
1	PAFZZ	5310-00-773-7618	80205	MS15795-814	WASHER,FLAT	8
2	PAFZZ	5305-00-068-0511	05047	AES01C375A25AZ0A86	SCREW,CAP,HEXAGON H	7
3	PAFZZ	5310-00-582-5677	80205	MS15795-810	WASHER,FLAT	8
4	PAFZZ	5305-00-225-3843	80204	B1821BH025C100N	SCREW,CAP,HEXAGON H	8
5	PAFZZ	5310-00-914-6028	81349	M45913/1-6CS3	NUT,SELF-LOCKING,HE	4
6	PAFHH	2540-01-414-7899	19200	12933517	FRAME,SEAT,VEHICULA SEE FIG. 200 FOR BREAKDOWN.....	1
6	PAFHH	2540-01-604-9318	19200	12933517-1	FRAME,SEAT,VEHICULA SEE FIG. 200 FOR BREAKDOWN.....	1
7	PAFZZ	1005-01-218-6172	19200	9379594	STOP,SEAT	1
8	PAFZZ	5310-00-728-9957	19207	10910174-22	WASHER,FLAT	8
9	PAFHH	2540-01-204-6019	19207	12334404	SEAT,VEHICULAR SEE FIG. 199 FOR BREAKDOWN.....	1
10	PAFZZ	5305-00-821-3869	05047	AES01C375A75AW9A91	SCREW,CAP,HEXAGON H	1
					END OF FIGURE	

BEREGINI BEREGINI BEREGINI

MAINTAINER

SEAT INSTL (BUSK III) (FTAJ) - 12334403-1

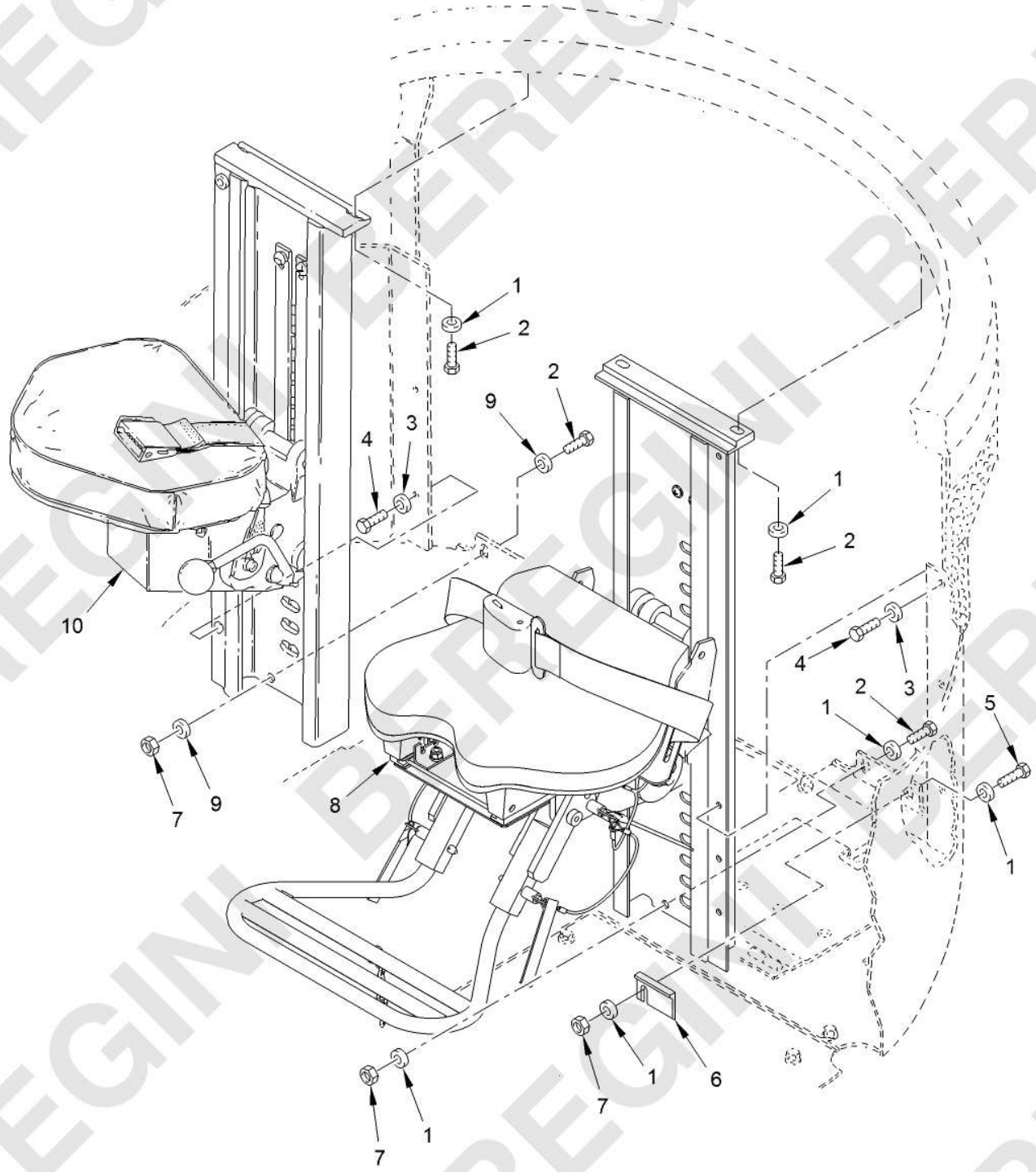

Figure 198. Seat Instl (BUSK III) (FTAJ) - 12334403-1
(Sheet 1 of 2)

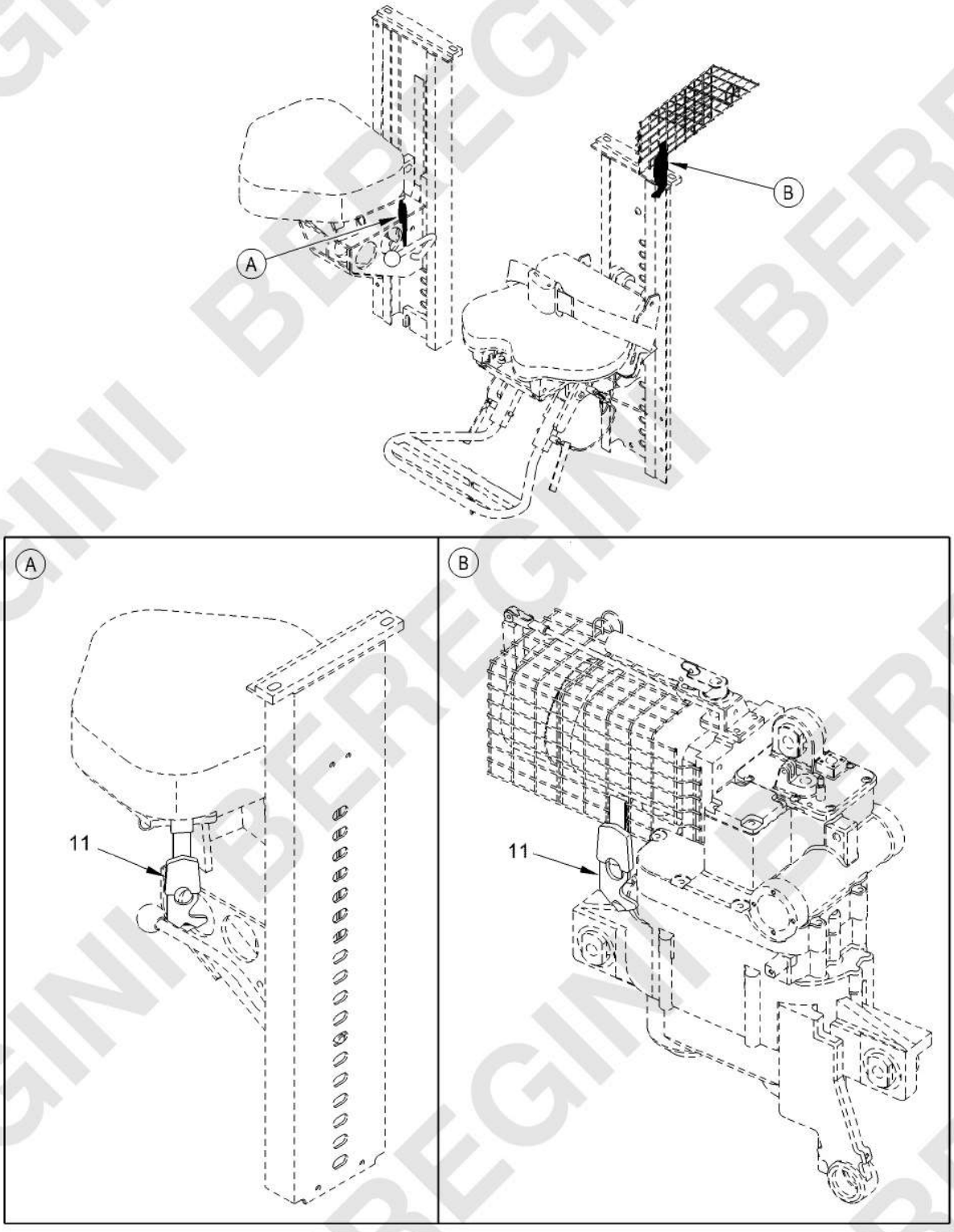

Figure 198. Seat Instl (BUSK III) (FTAJ) - 12334403-1
(Sheet 2 of 2)

(1) ITEM NO.	(2) SMR CODE	(3) NSN	(4) CAGEC	(5) PART NUMBER	(6) DESCRIPTION AND USABLE ON CODE (UOC)	(7) QTY
					GROUP FTAJ SEAT INSTL	
					FIGURE 198 Seat Instl (BUSK III) (FTAJ) - 12334403-1	
1	PAFZZ	5310-00-773-7618	80205	MS15795-814	WASHER,FLAT	4
2	PAFZZ	5305-00-068-0511	05047	AES01C375A25AZ0A86	SCREW,CAP,HEXAGON H	7
3	PAFZZ	5310-00-582-5677	80205	MS15795-810	WASHER,FLAT	8
4	PAFZZ	5305-00-225-3843	80204	B1821BH025C100N	SCREW,CAP,HEXAGON H	8
5	PAFZZ	5305-00-821-3869	05047	AES01C375A75AW9A91	SCREW,CAP,HEXAGON H	1
6	PAFZZ	2510-01-605-1642	19200	13024555	STOP,MECHANICAL	1
7	PAFZZ	5310-01-516-3509	81349	M45913/1-6CG8Z	NUT,SELF-LOCKING,HE	4
8	PAFHH	2540-01-604-9318	19200	12933517-1	FRAME,SEAT,VEHICULA SEE FIG. 200 FOR BREAKDOWN	1
9	PAFZZ	5310-00-728-9957	19207	10910174-22	WASHER,FLAT	8
10	PAFHH	2540-01-204-6019	19207	12334404	SEAT,VEHICULAR SEE FIG. 199 FOR BREAKDOWN	1
11	PAFZZ	2590-01-576-2424	0RAU7	22-01943	CUTTER,CABLE,VEHICL	2
					END OF FIGURE	

MAINTAINER

SEAT ASSEMBLY, COMMANDERS (FTAJA) - 12334404

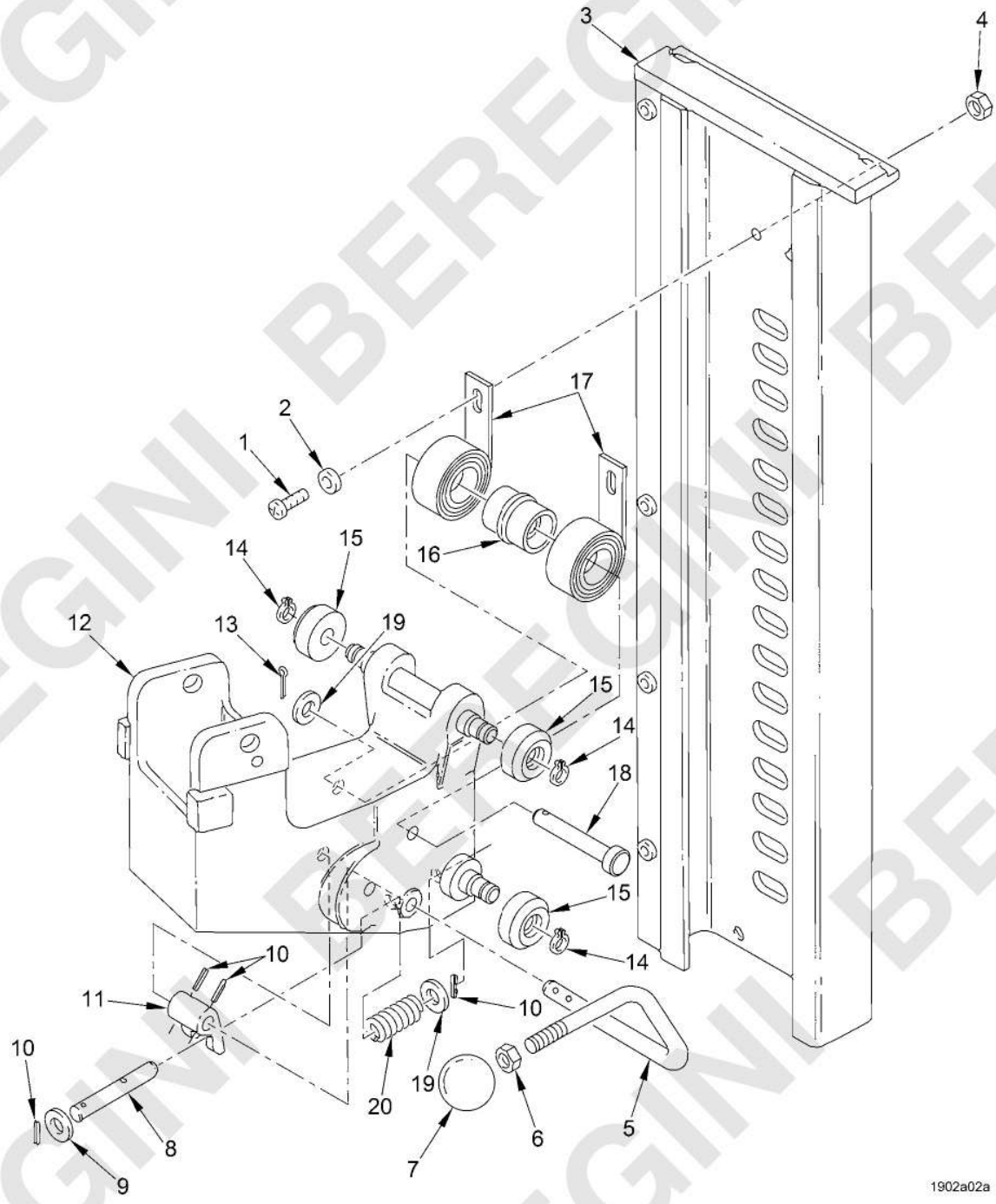

Figure 199. Seat Assembly, Commanders (FTAJA) - 12334404
(Sheet 1 of 2)

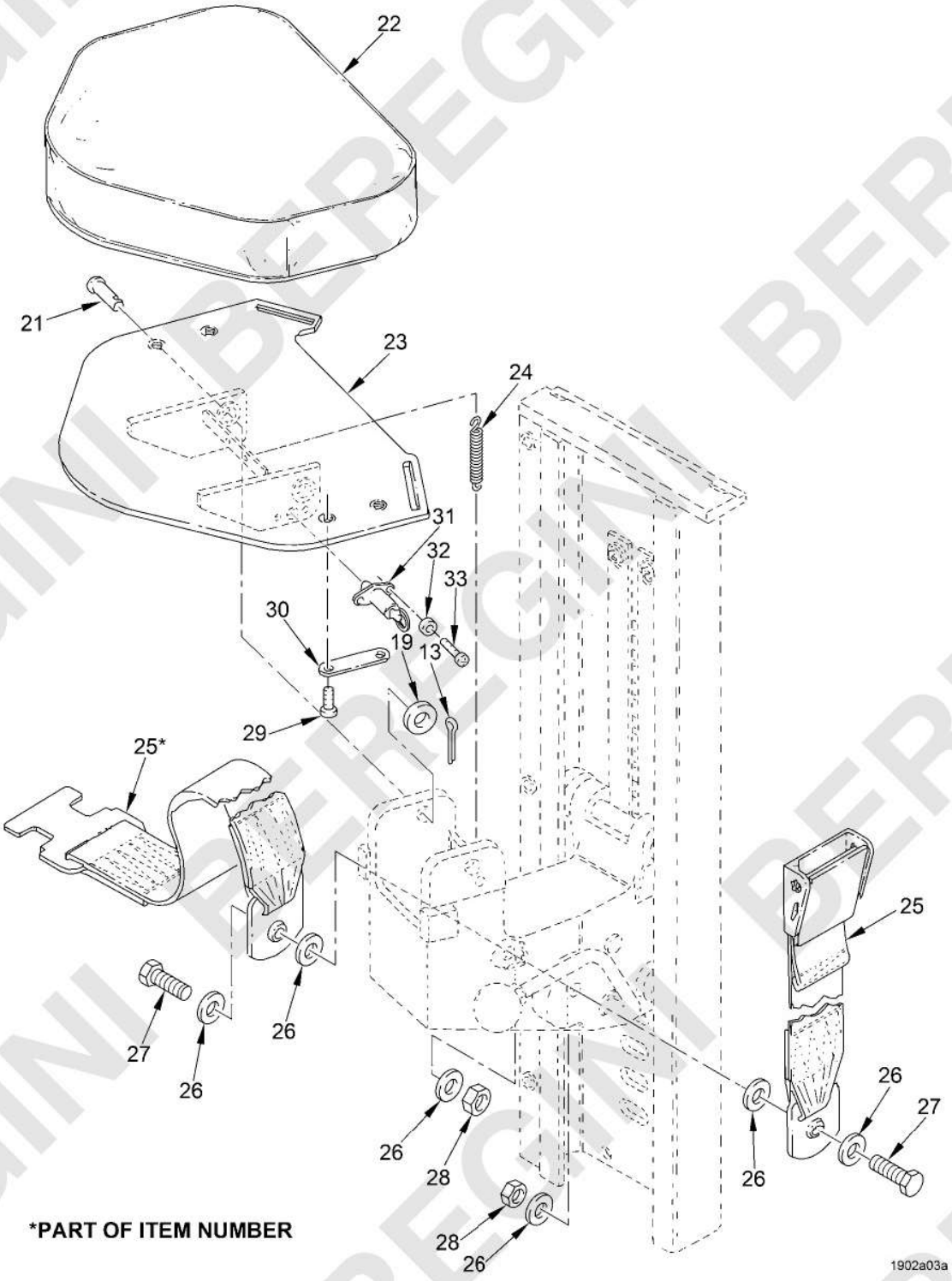

Figure 199. Seat Assembly, Commanders (FTAJA) - 12334404
(Sheet 2 of 2)

(1) ITEM NO.	(2) SMR CODE	(3) NSN	(4) CAGEC	(5) PART NUMBER	(6) DESCRIPTION AND USABLE ON CODE (UOC)	(7) QTY
					GROUP FTAJA COMMANDERS SEAT ASSEMBLY	
					FIGURE 199 Seat Assembly, Commanders (FTAJA) - 12334404	
1	PAHZZ	5305-00-988-1724	96906	MS35206-280	SCREW,MACHINE	2
2	PAHZZ	5310-00-809-4058	96906	MS27183-10	WASHER,FLAT	2
3	PAHZZ	1005-01-192-7195	19207	12328728-1	TRACK,SEAT	1
4	PAHZZ	5310-00-088-1251	81349	M45913/1-4CG5Z	NUT,SELF-LOCKING,HE	2
5	PAHZZ	5340-01-102-4208	19200	12294460-1	CRANK,HAND	1
6	PAHZZ	5310-00-834-8732	96906	MS35691-33	NUT,PLAIN,HEXAGON	1
7	PAHZZ	5355-00-937-0434	19207	8763597	KNOB	1
8	PAHZZ	5315-01-108-5511	19207	12298650	PIN,STRAIGHT,HEADLE	1
9	PAHZZ	5310-00-866-4417	19207	10910174-5	WASHER,FLAT	1
10	PAHZZ	5315-00-814-3531	80205	MS16562-50	PIN,SPRING	4
11	PAHZZ	1005-01-109-1559	19207	12297897	CAM,STOP PIN	1
12	PAHZZ	1005-01-107-5649	19207	12294495	SUPPORT,SEAT	1
13	PAFZZ	5315-01-359-1451	80205	MS24665-285	PIN,COTTER	3
14	PAHZZ	5365-00-804-7655	96906	MS16624-2050	RING,RETAINING	4
15	PAHZZ	2590-00-912-6487	19207	8763588	ROLLER AND BEARING	4
16	PAHZZ	2540-00-010-2503	19207	8763560	SPOOL,DRIVERS SEAT	1
17	PAHZZ	5360-01-105-5600	19207	12294459	SPRING,SPIRAL,TORSI	2
18	PAHZZ	5315-00-904-0912	96906	MS20392-7C101	PIN,STRAIGHT,HEADED	1
19	PAFZZ	5310-00-809-5998	96906	MS27183-18	WASHER,FLAT	4
20	PAHZZ	5360-00-709-5855	19207	8763586	SPRING,HELICAL,COMP	1
21	PAFZZ	5315-00-081-7042	80205	MS20392-7C37	PIN,STRAIGHT,HEADED	2
22	PAFZZ	2540-01-112-3988	19207	12294508	CUSHION,SEAT,VEHICU	1
23	PAFZZ	1005-01-107-5644	19207	12295198	PLATFORM,SEAT	1
24	PAFZZ	5360-01-114-2292	19207	12300163-4	SPRING,HELICAL,EXTE	2
25	PAFZZ	2540-01-126-7841	19207	12297367-5	BELT,VEHICULAR SAFE	1
26	PAFZZ	5310-00-080-6004	96906	MS27183-14	WASHER,FLAT	6
27	PAFZZ	5305-00-068-0511	05047	AES01C375A25AZ0A86	SCREW,CAP,HEXAGON H	2
28	PAFZZ	5310-00-087-4652	81349	M45913/1-6CG5C	NUT,SELF-LOCKING,HE	2
29	PAFZZ	5305-01-045-8389	80064	2585164-279	SCREW,CAP,SOCKET HE	4
30	PAFZZ	5365-00-050-1378	80064	2585705-2	SPACER,PLATE	2

(1) ITEM NO.	(2) SMR CODE	(3) NSN	(4) CAGEC	(5) PART NUMBER	(6) DESCRIPTION AND USABLE ON CODE (UOC)	(7) QTY
31	PAFZZ	5315-01-113-2357	19207	12295126	PIN,QUICK RELEASE	1
32	PAFZZ	5310-00-950-1310	96906	MS27183-4	WASHER,FLAT	1
33	PAFZZ	5305-00-456-0001	80205	MS21295-13	SCREW,CAP,SOCKET HE	1
					END OF FIGURE	

BEREGINI BEREGINI BEREGINI

MAINTAINER

SEAT ASSEMBLY, GUNNERS (FTAJB) - 12933517 (PRE-BUSK III), 12933517-1 (BUSK III)

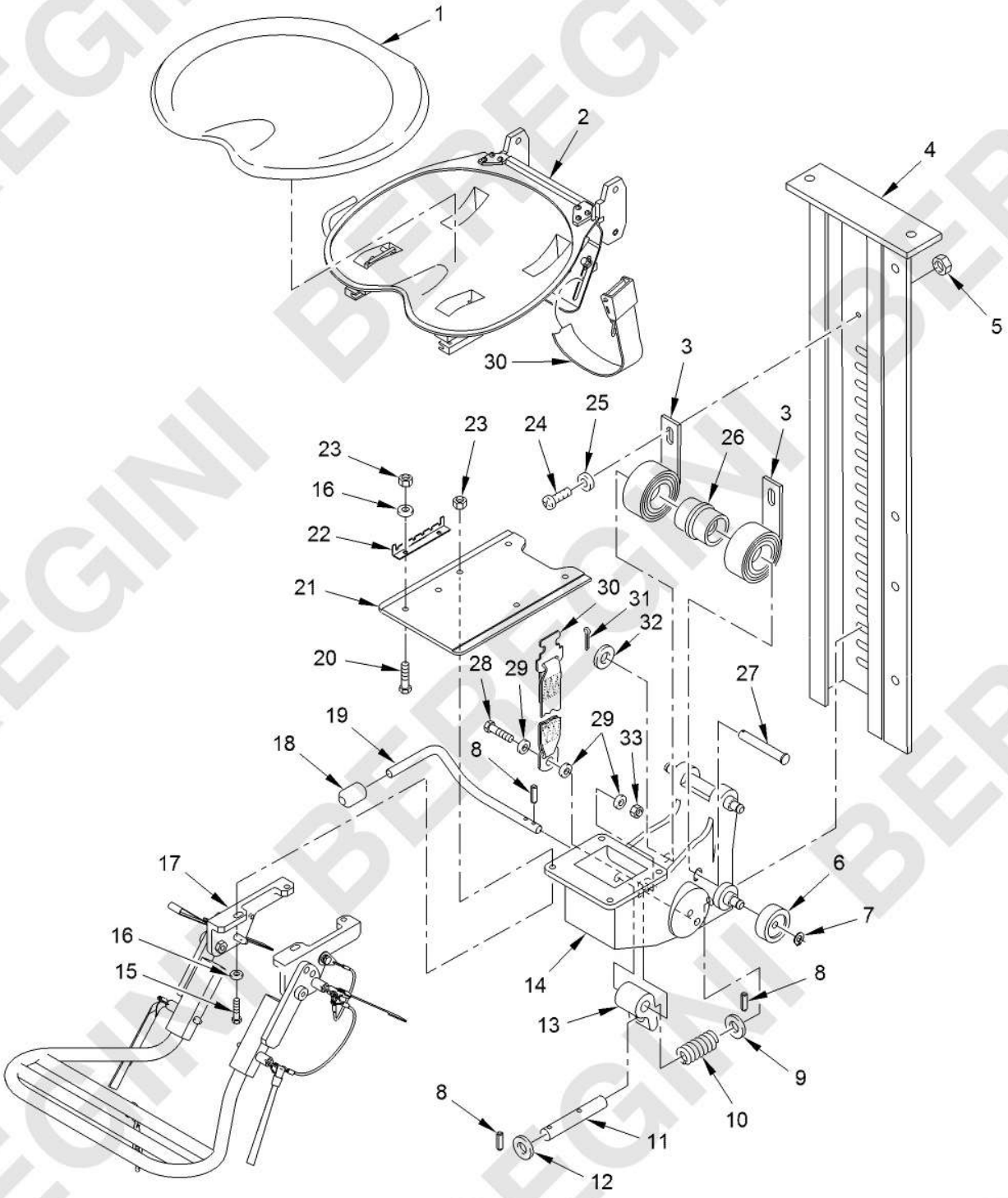

Figure 200. Seat Assembly, Gunners (FTAJB) - 12933517 (Pre-BUSK III), 12933517-1 (BUSK III)

(1) ITEM NO.	(2) SMR CODE	(3) NSN	(4) CAGEC	(5) PART NUMBER	(6) DESCRIPTION AND USABLE ON CODE (UOC)	(7) QTY
					GROUP FTAJB GUNNERS SEAT ASSEMBLY	
					FIGURE 200 Seat Assembly, Gunners (FTAJB) - 12933517 (Pre-BUSK III), 12933517-1 (BUSK III)	
1	PAFZZ	2540-00-831-6946	19207	10866352	CUSHION,SEAT,VEHICU	1
2	PAFFF	2540-01-437-3317	19200	12933518	SEAT,VEHICULAR SEE FIG. 201 FOR BREAKDOWN	1
3	PAHZZ	5360-01-105-5600	19207	12294459	SPRING,SPIRAL,TORSI	2
4	PAHZZ	5340-01-371-1911	19200	9381071	TRACK,SLIDING DOOR	1
5	PAHZZ	5310-00-088-1251	81349	M45913/1-4CG5Z	NUT,SELF-LOCKING,HE	2
6	PAHZZ	2590-00-912-6487	19207	8763588	ROLLER AND BEARING	4
7	PAHZZ	5365-00-804-7655	96906	MS16624-2050	RING,RETAINING	4
8	PAHZZ	5315-00-753-3894	80205	MS16562-238	PIN,SPRING	4
9	PAFZZ	5310-00-767-9425	80205	MS15795-818	WASHER,FLAT	1
10	PAHZZ	5360-00-709-5855	19207	8763586	SPRING,HELICAL,COMP	1
11	PAHZZ	5315-01-108-5511	19207	12298650	PIN,STRAIGHT,HEADLE	1
12	PAHZZ	5310-00-866-4417	19207	10910174-5	WASHER,FLAT	1
13	PAHZZ	1005-01-109-1559	19207	12297897	CAM,STOP PIN	1
14	PAHZZ	2540-01-432-4651	19200	12933537	SUPPORT,SEAT,VEHICU	1
15	PAFZZ	5306-00-226-4829	05047	AEB02C312A25AW9A91	BOLT,MACHINE PRE-BUSK III	4
15	PAFZZ	5305-00-226-4831	05047	AES01C312A50AW9A91	SCREW,CAP,HEXAGON H BUSK III	4
16	PAFZZ	5310-00-877-5973	19200	10910174-2	WASHER,FLAT	6
17	PAFFF	2540-01-595-6752	19200	13024522	FOOTREST,GUNNER ASY BUSK III, SEE FIG. 202 FOR BREAKDOWN	1
18	PAHZZ	5355-01-433-0395	19200	12933596	KNOB	1
19	PAHZZ	5340-01-102-7860	19207	12294460-2	CRANK,HAND	1
20	PAFZZ	5306-00-226-4826	05047	AEB02C312875AW9A91	BOLT,MACHINE	2
21	PAFZZ	2540-01-432-5139	19200	12933515	PLATE,MOUNTING,VEHI	1
22	PAFZZ	5340-01-431-0620	19200	12933512	BRACKET,ANGLE	1
23	PAFZZ	5310-01-494-9745	81349	M45913/1-5CG8Z	NUT,SELF-LOCKING,HE	6
24	PAHZZ	5305-01-571-7795	80205	MS35206-280Z	SCREW,MACHINE	2
25	PAHZZ	5310-00-582-5677	80205	MS15795-810	WASHER,FLAT	2
26	PAHZZ	2540-00-010-2503	19207	8763560	SPOOL,DRIVERS SEAT	1
27	PAHZZ	5315-00-904-0912	96906	MS20392-7C101	PIN,STRAIGHT,HEADED	1

(1) ITEM NO.	(2) SMR CODE	(3) NSN	(4) CAGEC	(5) PART NUMBER	(6) DESCRIPTION AND USABLE ON CODE (UOC)	(7) QTY
28	PAFZZ	5305-00-688-2111	05047	AES01C375A37AW9A91	SCREW,CAP,HEXAGON H	2
29	PAFZZ	5310-00-773-7618	80205	MS15795-814	WASHER,FLAT	6
30	PAFZZ	2540-01-126-7841	19207	12297367-5	BELT,VEHICULAR SAFE	1
31	PAFZZ	5315-00-234-1864	80205	MS24665-302	PIN,COTTER	1
32	PAFZZ	5310-00-767-9425	80205	MS15795-818	WASHER,FLAT	1
33	PAFZZ	5310-01-516-3509	81349	M45913/1-6CG8Z	NUT,SELF-LOCKING,HE	2

END OF FIGURE

MAINTAINER

SEAT, VEHICULAR (FTAJBA) - 12933518

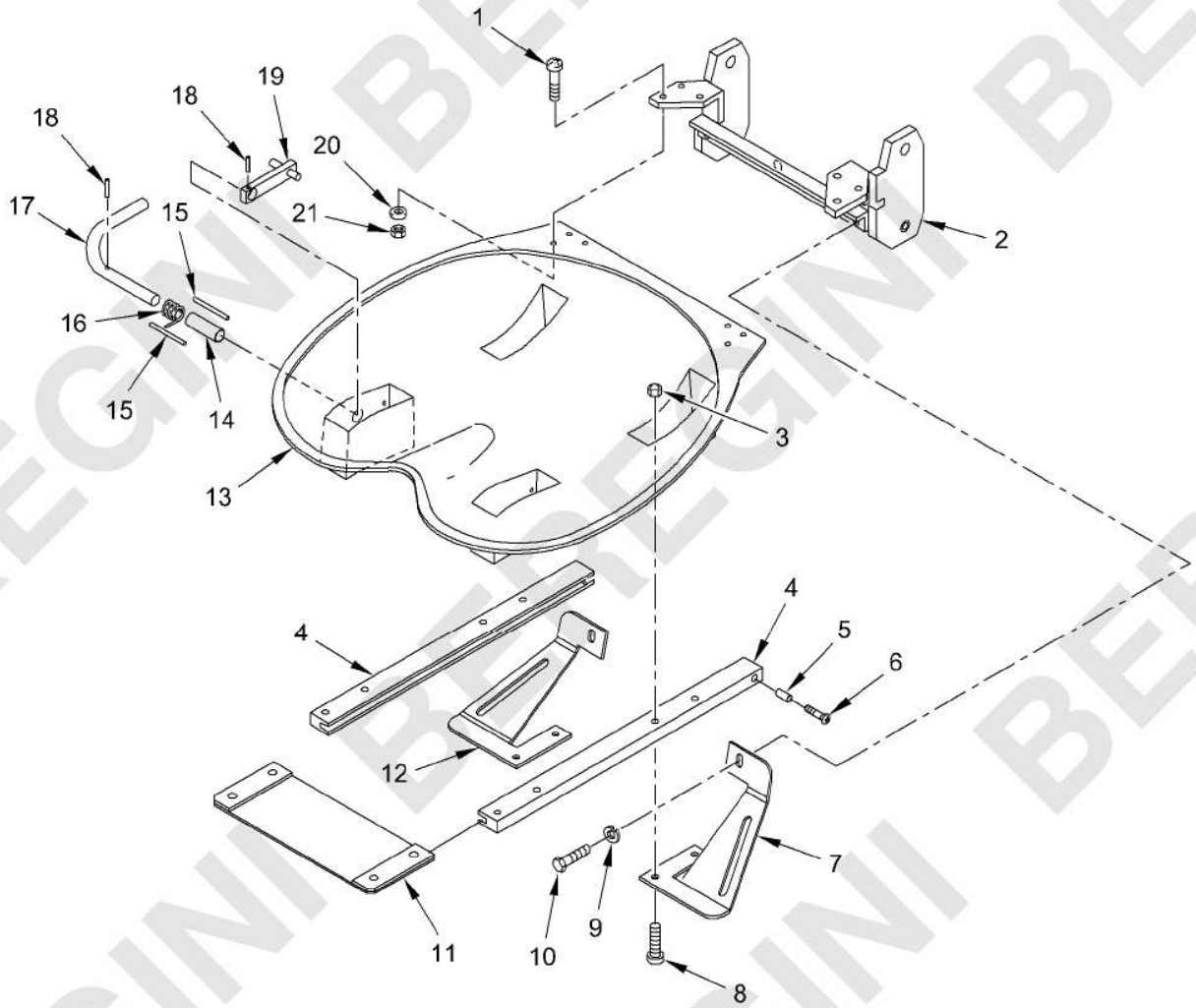

Figure 201. Seat, Vehicular (FTAJBA) - 12933518

(1) ITEM NO.	(2) SMR CODE	(3) NSN	(4) CAGEC	(5) PART NUMBER	(6) DESCRIPTION AND USABLE ON CODE (UOC)	(7) QTY
					GROUP FTAJBA VEHICULAR SEAT	
					FIGURE 201 Seat, Vehicular (FTAJBA) - 12933518	
1	PAFZZ	5310-01-106-7956	19207	12295594	WASHER,KEY	6
2	PAFZZ	2540-01-438-4888	19200	12933513	SUPPORT,SEAT,VEHICU	1
3	PAFZZ	5310-00-638-8146	18876	10393773-010	NUT,SELF-LOCKING,SP	8
4	PAFZZ	3040-00-840-9526	19207	10865863	BRACKET,EYE,NONROTA	2
5	PAFZZ	5365-00-177-8310	19207	10865873	SPACER,SLEEVE	2
6	PAFZZ	5342-01-106-7830	19207	12295122	RACE,INNER GUN MOUN	2
7	PAFZZ	2590-01-604-9189	19200	12933530-1	BRACKET,MOUNTING	1
8	PAFZZ	5340-01-106-7829	19207	12297174	PLUG,PROTECTIVE,DUS	8
9	PAFZZ	4010-01-125-4244	19207	12308240	CHAIN ASSEMBLY,SING	2
10	PAFZZ	5305-00-071-2506	05047	AES01C250500AW9A91	SCREW,CAP,HEXAGON H	2
11	PAFZZ	2540-01-432-5148	19200	12933519	BRACE,VEHICULAR SEA	1
12	PAFZZ	5340-01-441-7295	19200	12933529	BRACKET,MOUNTING	1
13	PAFZZ	2540-00-690-2114	19207	10866008	SEAT,VEHICULAR	1
14	PAFZZ	3120-00-234-0183	19207	10908077	BUSHING,SLEEVE	1
15	PAFZZ	5315-00-814-3530	80205	MS16562-35	PIN,SPRING	2
16	PAFZZ	5360-00-709-5866	19207	10865868	SPRING,HELICAL,TORS	1
17	PAFZZ	3040-00-177-7866	19207	10865866	LEVER,MANUAL CONTRO	1
18	PAFZZ	5315-00-814-4456	80205	NAS561C4-24	PIN,SPRING	2
19	PAFZZ	2540-00-234-3503	19207	10890814	LOCK,SEAT,BACK	1
20	PAFZZ	5315-01-106-7968	19207	12294562	PIN,QUICK RELEASE	6
21	PAFZZ	5310-00-982-6813	80205	MS21044C06	NUT,SELF-LOCKING,HE	6
					END OF FIGURE	

BEREGINI BEREGINI BEREGINI

MAINTAINER

GUNNERS FOOTREST ASSY (BUSK III) (FTAJBB) - 13024522

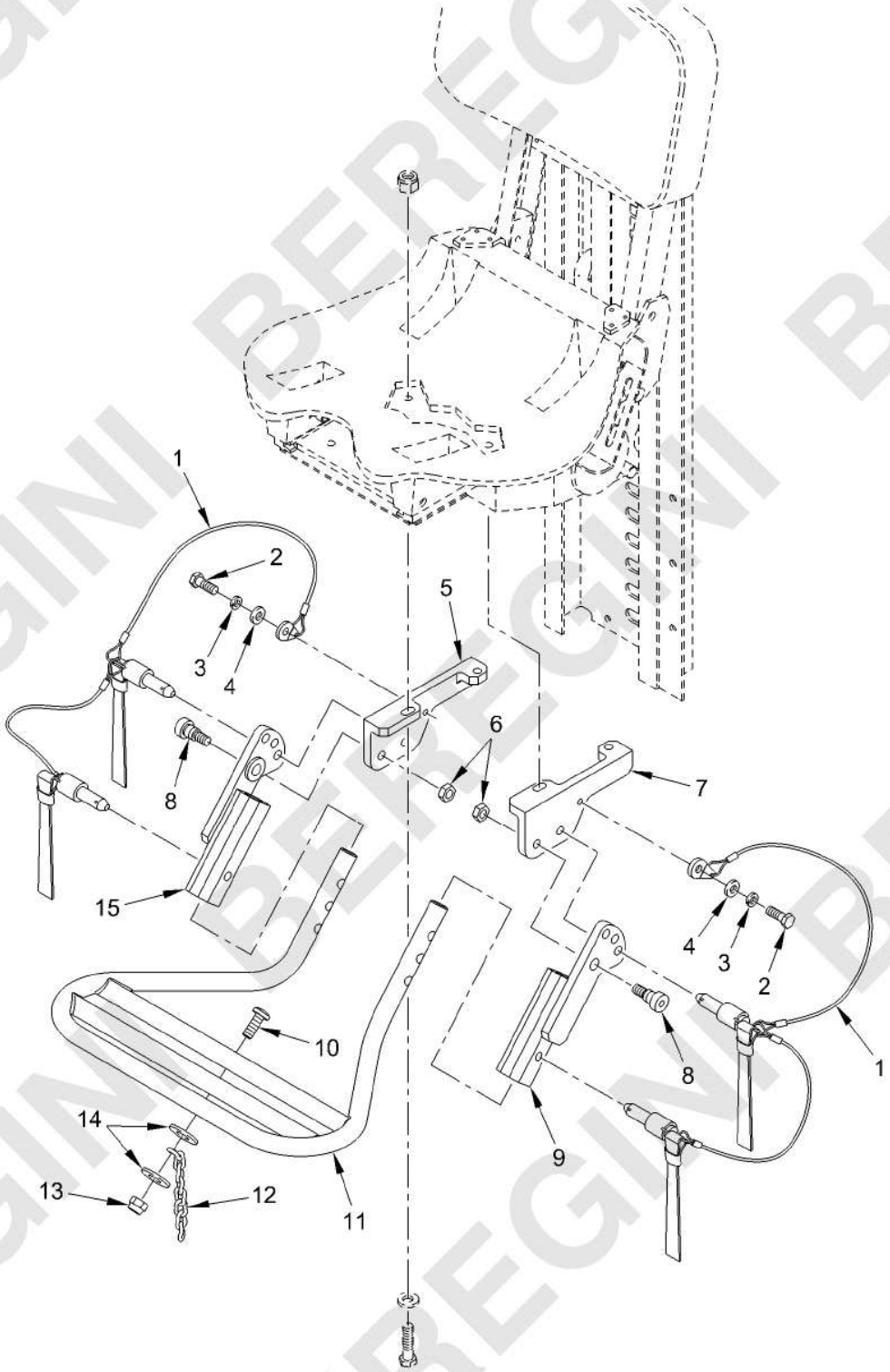

Figure 202. Gunners Footrest Assy (BUSK III) (FTAJBB) - 13024522

(1) ITEM NO.	(2) SMR CODE	(3) NSN	(4) CAGEC	(5) PART NUMBER	(6) DESCRIPTION AND USABLE ON CODE (UOC)	(7) QTY
					GROUP FTAJBB GUNNERS FOOTREST ASSY	
					FIGURE 202 Gunners Footrest Assy (BUSK III) (FTAJBB) - 13024522	
1	PAFZZ	5315-01-590-7489	19200	13024524	PIN,QUICK RELEASE	2
2	PAFZZ	5305-00-068-0508	05047	AES01C250750AW9A91	SCREW,CAP,HEXAGON H	2
3	PAFZZ	5310-00-933-8121	80205	MS35338-139	WASHER,LOCK	2
4	PAFZZ	5310-00-865-9513	19207	10910174-1	WASHER,FLAT	2
5	PAFZZ	5340-01-593-9666	19200	13024517-2	MOUNTING BRACKET	1
6	PAFZZ	5310-00-477-6768	80205	MS35649-2384	NUT,PLAIN,HEXAGON	2
7	PAFZZ	5340-01-590-7702	19200	13024517-1	BRACKET,MOUNTING	1
8	PAFZZ	5305-01-593-9649	19200	13024554	SHOULDER SCREW	2
9	PAFZZ	5340-01-593-9670	19200	13024519	PIVOT PLATE,LEFT	1
10	PAFZZ	5305-01-592-8499	80205	MS35206-265Z	SCREW,MACHINE	1
11	PAFZZ	2540-01-591-7135	19200	13024521	FOOTREST,VEHICULAR	1
12	PAFZZ	4010-01-616-4452	80205	NAS1396-10-5	CHAIN,WELDED	1
13	PAFZZ	5310-01-415-1314	80205	MS17829Z3C	NUT,SELF-LOCKING,HE	1
14	PAFZZ	5310-00-615-1556	80205	MS15795-846	WASHER,FLAT	2
15	PAFZZ	5340-01-593-9669	19200	13024520	PIVOT PLATE,RIGHT	1
					END OF FIGURE	

BEREGINI BEREGINI BEREGINI

MAINTAINER

TRAVERSE BEARING INSTL (FTAK) - 12294584

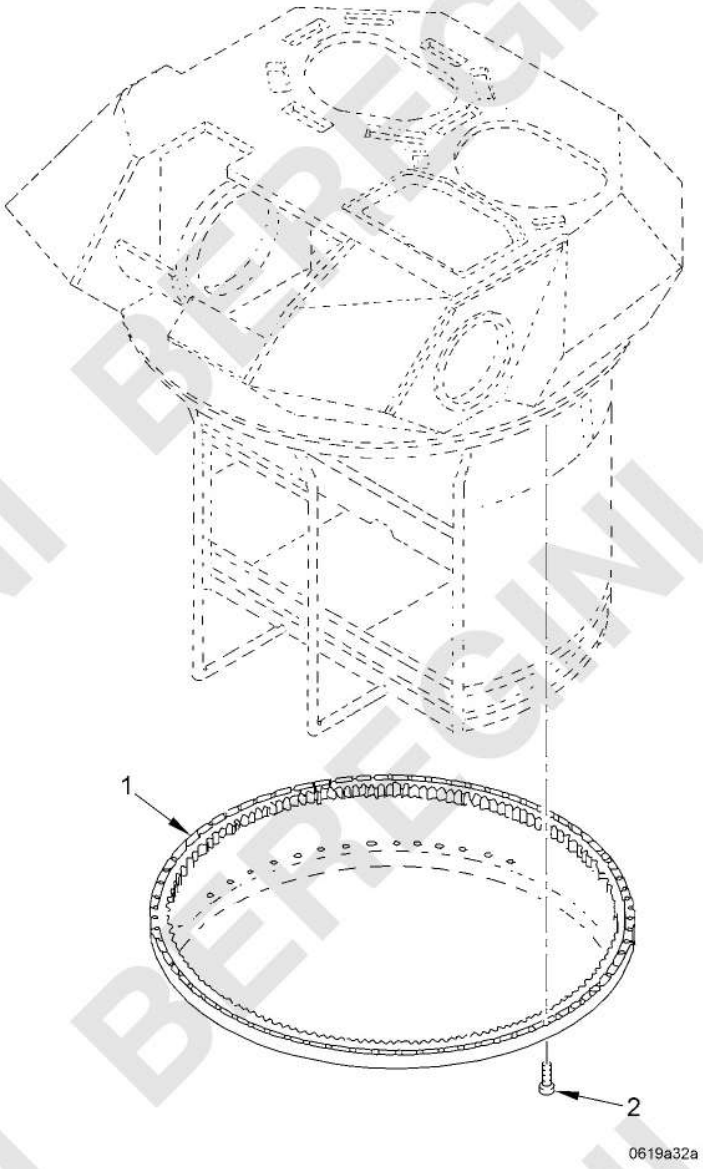

Figure 203. Traverse Bearing Instl (FTAK) - 12294584

(1) ITEM NO.	(2) SMR CODE	(3) NSN	(4) CAGEC	(5) PART NUMBER	(6) DESCRIPTION AND USABLE ON CODE (UOC)	(7) QTY
					GROUP FTAK TRAVERSE BEARING INSTL	
					FIGURE 203 Traverse Bearing Instl (FTAK) - 12294584	
1	PAFKK	3110-01-095-8792	19207	12292058	BEARING,BALL,ANNULA	1
2	PAFZZ	5306-01-147-1197	81343	J58 1/2-13UNC-3AX3.000NOM	BOLT,MACHINE	48
					END OF FIGURE	

BEREGINI BEREGINI BEREGINI

MAINTAINER

TRAVEL LOCK INSTL (FTAL) - 12294801

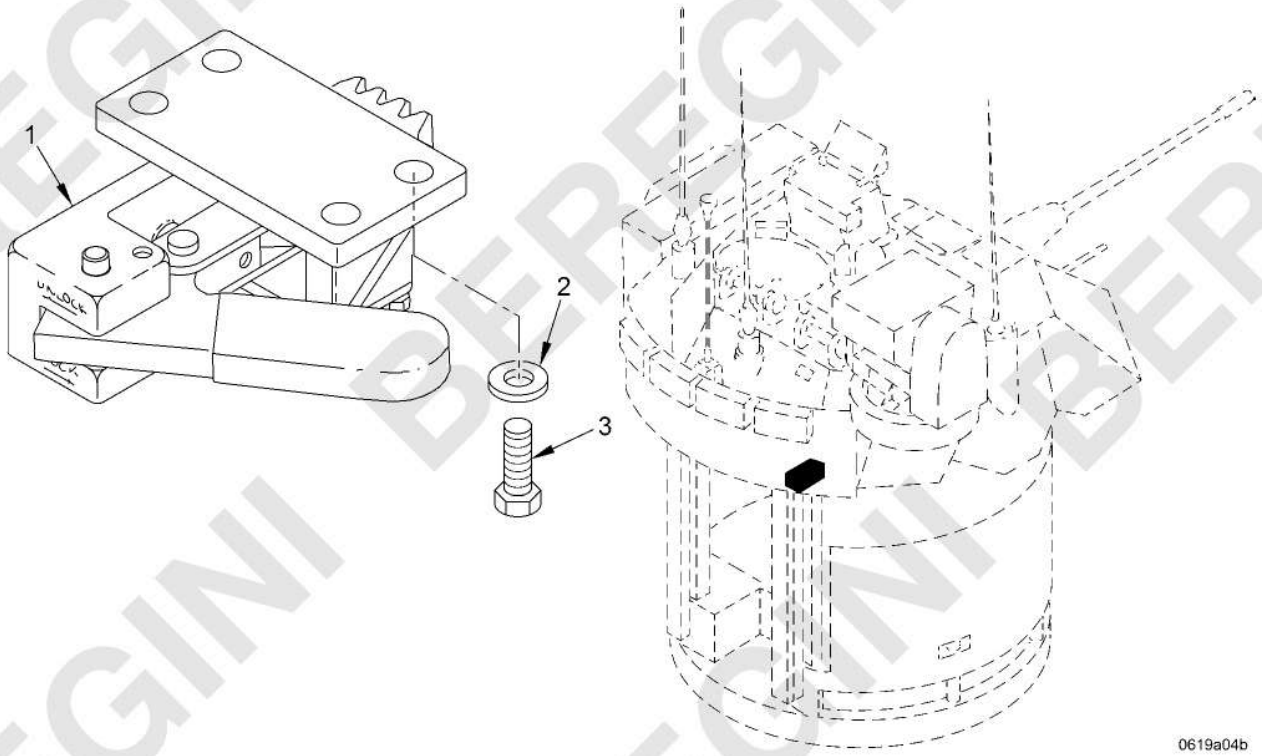

Figure 204. Travel Lock Instl (FTAL) - 12294801

(1) ITEM NO.	(2) SMR CODE	(3) NSN	(4) CAGEC	(5) PART NUMBER	(6) DESCRIPTION AND USABLE ON CODE (UOC)	(7) QTY
					GROUP FTAL TRAVEL LOCK INSTL	
					FIGURE 204 Travel Lock Instl (FTAL) - 12294801	
1	PAFFF	1005-01-456-5348	19200	12933685	TRAVEL LOCK ASSEMBL SEE FIG. 205 FOR BREAKDOWN.....	1
2	PAFZZ	5310-00-877-5972	19200	10910174-3	WASHER,FLAT	4
3	PAFZZ	5305-00-543-2419	05047	AES01C375A12AW9A91	SCREW,CAP,HEXAGON H	4
					END OF FIGURE	

BEREGINI BEREGINI BEREGINI

MAINTAINER

TRAVEL LOCK ASSEMBLY (FTALA) - 12933685

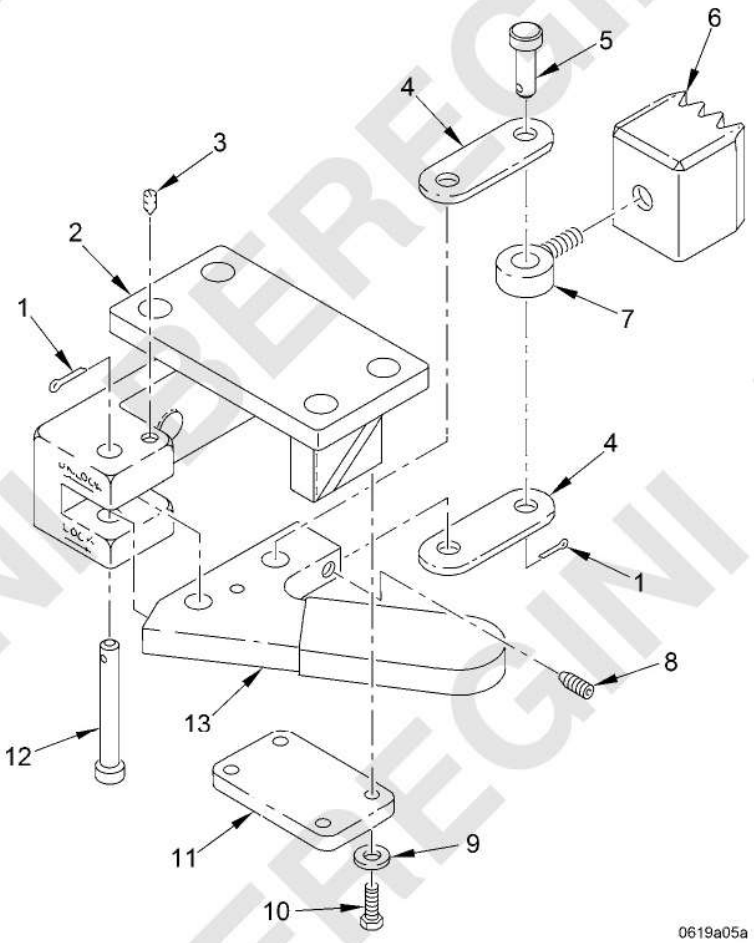

Figure 205. Travel Lock Assembly (FTALA) - 12933685

(1) ITEM NO.	(2) SMR CODE	(3) NSN	(4) CAGEC	(5) PART NUMBER	(6) DESCRIPTION AND USABLE ON CODE (UOC)	(7) QTY
					GROUP FTALA TRAVEL LOCK ASSEMBLY	
					FIGURE 205 Travel Lock Assembly (FTALA) - 12933685	
1	PAFZZ	5315-00-842-3044	80205	MS24665-283	PIN,COTTER	3
2	XAFZZ		19200	12933592	HOUSING,TRAVEL LOCK	1
3	PAFZZ	5340-01-118-8617	18876	10040002	PLUNGER,QUICK RELEA	1
4	PAFZZ	3040-01-111-4062	19207	12296853	CONNECTING LINK,RIG	2
5	PAFZZ	5315-00-957-2399	96906	MS20392-5C35	PIN,STRAIGHT,HEADED	2
6	XAFZZ		19200	12933593	GEAR SECTOR	1
7	PAFZZ	5340-01-102-7861	19200	12296854	CONNECTOR,ROD END	1
8	PAFZZ	5305-01-213-4005	80205	MS51966-131	SETSCREW	1
9	PAFZZ	5310-00-809-4058	96906	MS27183-10	WASHER,FLAT	4
10	PAFZZ	5305-00-068-0508	05047	AES01C250750AW9A91	SCREW,CAP,HEXAGON H	4
11	PAFZZ	5340-01-110-3297	19207	12296855	COVER,ACCESS	1
12	PAFZZ	5315-00-429-1154	96906	MS20392-5C59	PIN,STRAIGHT,HEADED	1
13	PAFZZ	5340-01-109-6963	19207	12295202	LEVER,MANUAL CONTRO	1
					END OF FIGURE	

BEREGINI BEREGINI BEREGINI

MAINTAINER

SMOKE GRENADE LAUNCHER INSTL (FTAM) - 12986302

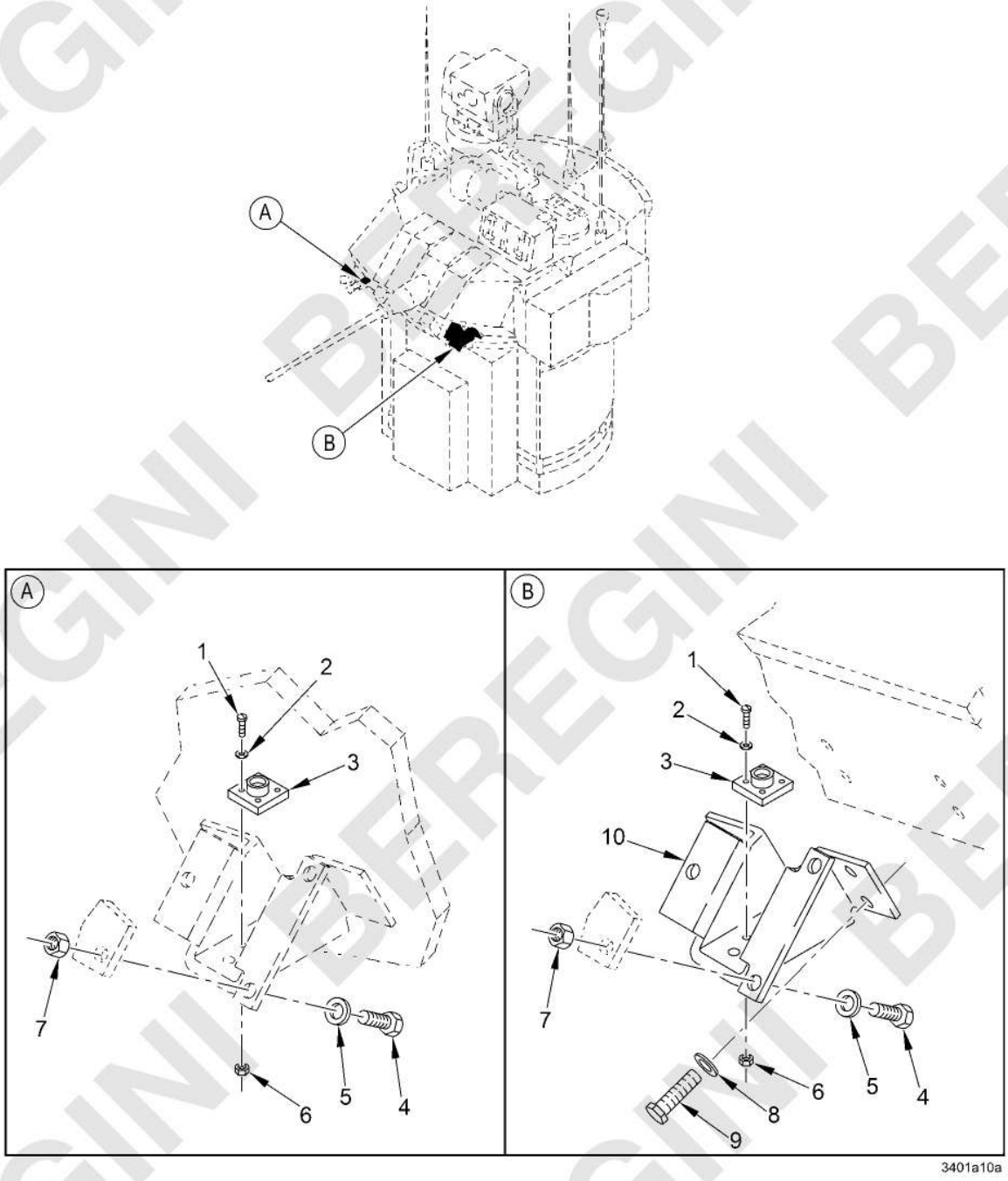

Figure 206. Smoke Grenade Launcher Instl (FTAM) - 12986302

(1) ITEM NO.	(2) SMR CODE	(3) NSN	(4) CAGEC	(5) PART NUMBER	(6) DESCRIPTION AND USABLE ON CODE (UOC)	(7) QTY
					GROUP FTAM SMOKE GRENADE LAUNCHER INSTL	
					FIGURE 206 Smoke Grenade Launcher Instl (FTAM) - 12986302	
1	PAFZZ	5305-00-983-6730	80205	MS35206-218	SCREW,MACHINE	8
2	PAFZZ	5310-00-951-4679	96906	MS27183-3	WASHER,FLAT	8
3	PAFZZ	5935-00-995-0420	96906	MS3105-14	SHELL,ELECTRICAL CO	2
4	PAFZZ	5305-00-269-3236	80204	B1821BH038F100N	SCREW,CAP,HEXAGON H	6
5	PAFZZ	5310-00-080-6004	96906	MS27183-14	WASHER,FLAT	6
6	PAFZZ	5310-00-925-9645	80205	MS21083-N04	NUT,SELF-LOCKING,HE	8
7	PAFZZ	5310-00-959-1488	81349	M45913/2-6FG5C	NUT,SELF-LOCKING,HE	6
8	PAFZZ	5310-00-866-4417	19207	10910174-5	WASHER,FLAT	4
9	PAFZZ	5305-00-071-2073	05047	AES01C500B50AW9A91	SCREW,CAP,HEXAGON H	4
10	PAFZZ	1055-01-267-6166	19200	9379937	MOUNT,GRENADE LAUNC	1
					END OF FIGURE	

BEREGINI BEREGINI BEREGINI

MAINTAINER

PADS INSTALLATION (FTAN) - 12293209

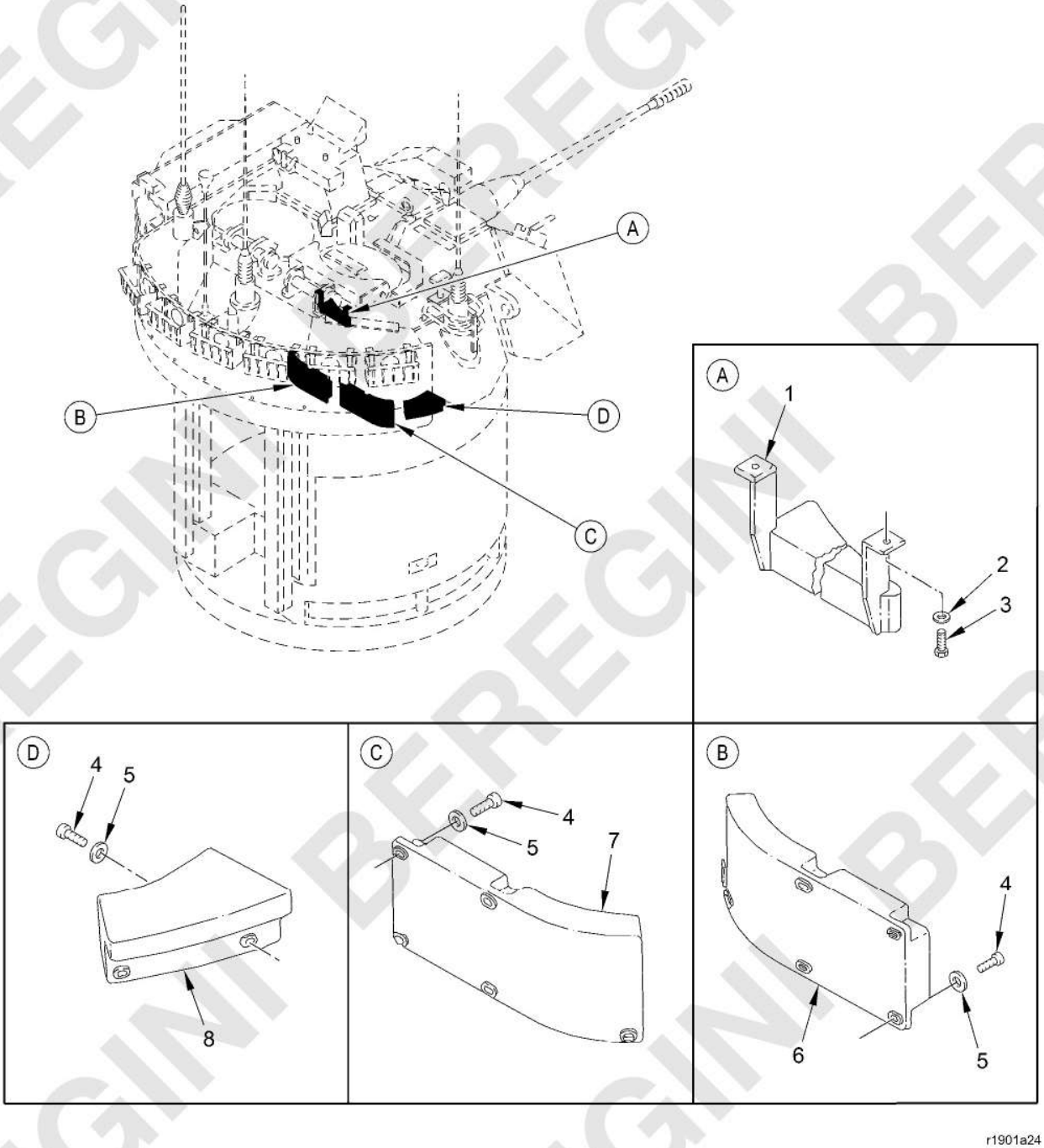

Figure 207. Pads Installation (FTAN) - 12293209

(1) ITEM NO.	(2) SMR CODE	(3) NSN	(4) CAGEC	(5) PART NUMBER	(6) DESCRIPTION AND USABLE ON CODE (UOC)	(7) QTY
					GROUP FTAN PADS INSTALLATION	
					FIGURE 207 Pads Installation (FTAN) - 12293209	
1	PAFZZ	2540-01-256-2298	19200	9379714	CUSHION,SEAT BACK,V	1
2	PAFZZ	5310-00-080-6004	96906	MS27183-14	WASHER,FLAT	2
3	PAFZZ	5305-00-068-0510	80204	B1821BH038C100N	SCREW,CAP,HEXAGON H	2
4	PAFZZ	5305-00-988-1725	80205	MS35206-281	SCREW,MACHINE	13
5	PAFZZ	5310-00-809-4058	96906	MS27183-10	WASHER,FLAT	13
6	PAFZZ	2540-01-110-9951	19207	12298232	CUSHION,SEAT BACK,V	1
7	PAFZZ	2540-01-110-9952	19207	12294823	CUSHION,SEAT BACK,V	1
8	PAFZZ	5340-01-112-8600	19207	12294833	PAD,CUSHIONING	1
					END OF FIGURE	

BEREGINI BEREGINI BEREGINI

MAINTAINER

ELECTRONICS COOLING INSTL (FTAO) - 13024678

BEREGINI

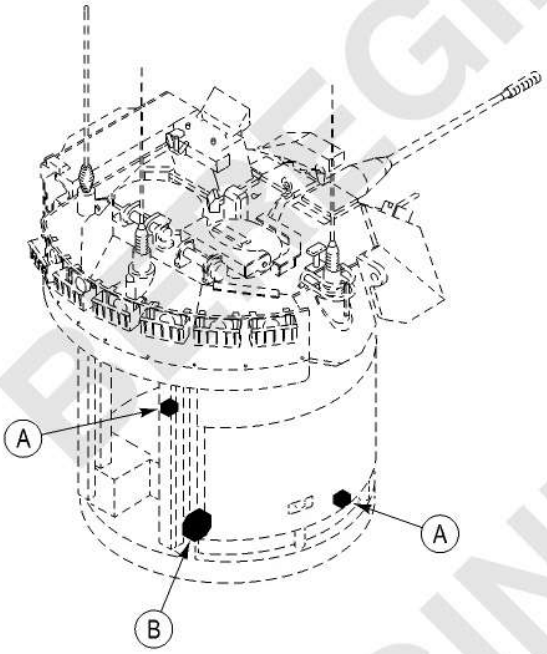

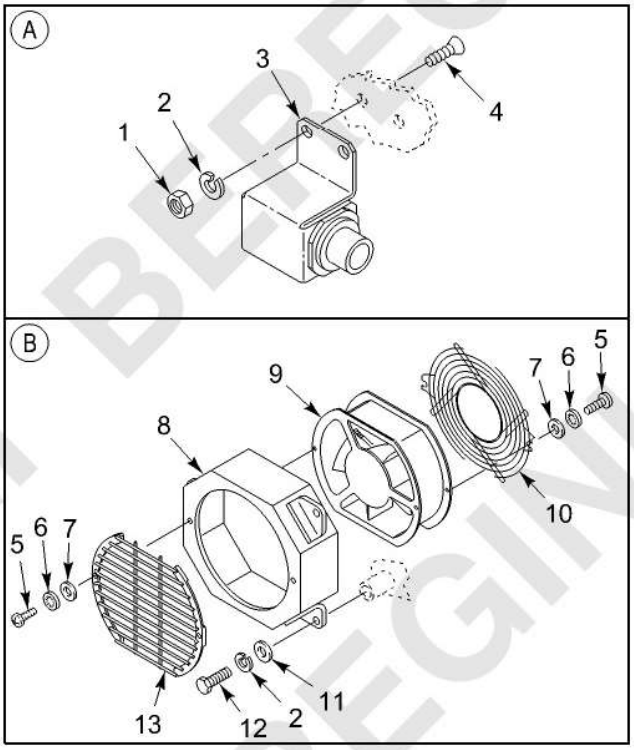

Figure 208. Electronics Cooling Instl (FTAO) - 13024678

(1) ITEM NO.	(2) SMR CODE	(3) NSN	(4) CAGEC	(5) PART NUMBER	(6) DESCRIPTION AND USABLE ON CODE (UOC)	(7) QTY
					GROUP FTAO ELECTRONICS COOLING INSTL	
					FIGURE 208 Electronics Cooling Instl (FTAO) - 13024678	
1	PAFZZ	5310-00-761-6882	96906	MS51967-2	NUT,PLAIN,HEXAGON UOC: BSA	4
2	PAFZZ	5310-00-582-5965	80205	MS35338-44	WASHER,LOCK UOC: BSA	7
3	PAFZZ	4820-01-457-9840	19200	12976104	VALVE ASSEMBLY	2
4	PAFZZ	5305-00-958-5245	80205	MS35190-288	SCREW,MACHINE	4
5	PAFZZ	5305-00-984-6195	80205	MS35206-247	SCREW,MACHINE UOC: BSA	4
6	PAFZZ	5310-00-559-0070	80205	MS35333-38	WASHER,LOCK UOC: BSA	4
7	PAFZZ	5310-00-809-8544	96906	MS27183-7	WASHER,FLAT UOC: BSA	4
8	PAFZZ	4140-01-460-5968	19200	12976108	BOX,FAN MOUNTING	1
9	PAFZZ	4140-01-460-6912	19200	12976105	FAN,VANEAXIAL UOC: BSA	1
10	PAFZZ	4140-01-228-8356	82877	501178	GUARD,FAN IMPELLER	1
11	PAFZZ	5310-00-809-4058	96906	MS27183-10	WASHER,FLAT	3
12	PAFZZ	5305-00-068-0508	05047	AES01C250750AW9A91	SCREW,CAP,HEXAGON H UOC: BSA	3
13	PAFZZ	4140-01-460-7202	19200	12974707	GUARD,FAN IMPELLER UOC: BSA	1
					END OF FIGURE	

BEREGINI BEREGINI BEREGINI

MAINTAINER

ELECTRONICS COOLING INSTL (FTAO) - 12976100

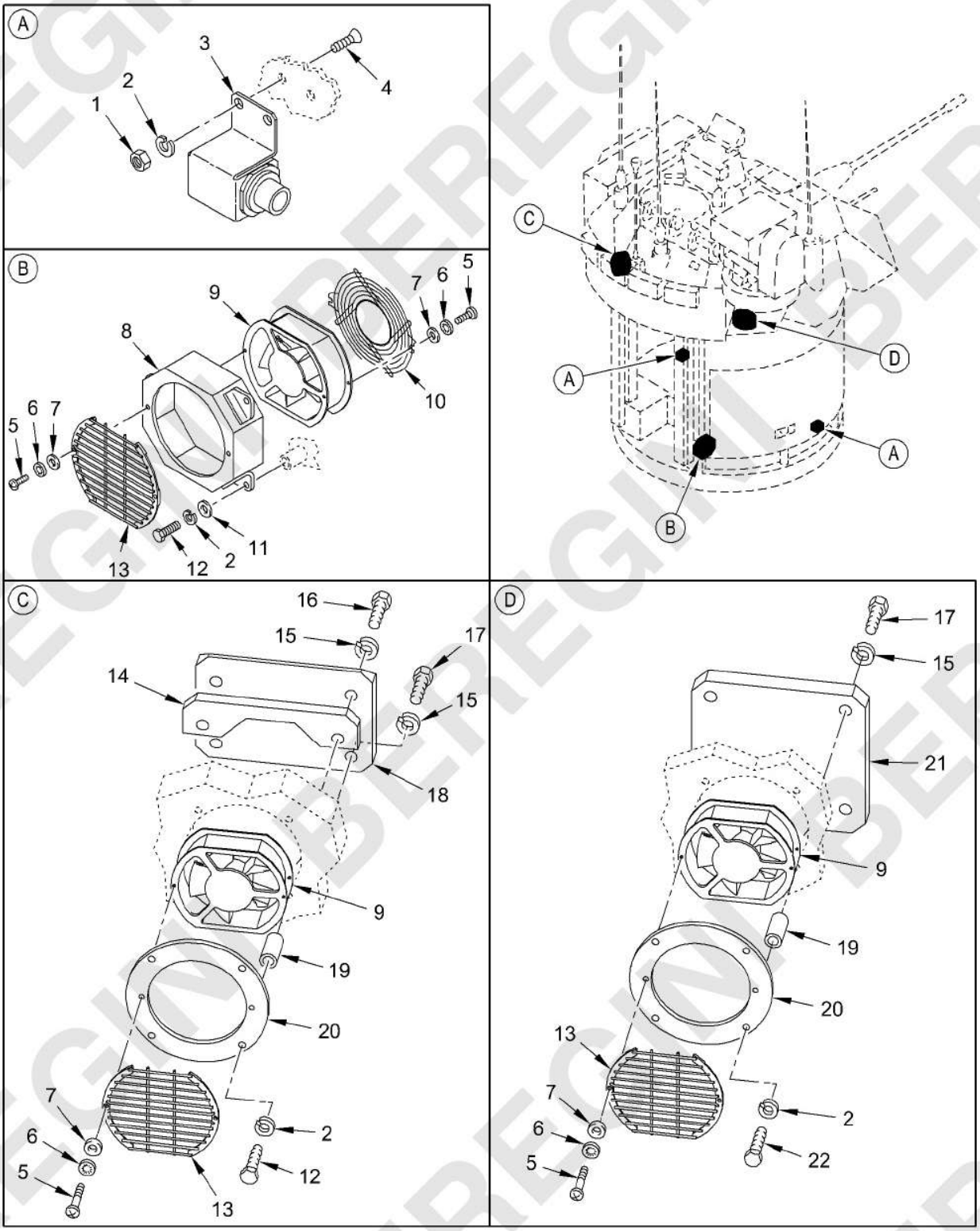

Figure 209. Electronics Cooling Instl (FTAO) - 12976100

(1) ITEM NO.	(2) SMR CODE	(3) NSN	(4) CAGEC	(5) PART NUMBER	(6) DESCRIPTION AND USABLE ON CODE (UOC)	(7) QTY
					GROUP FTAO ELECTRONICS COOLING INSTL	
					FIGURE 209 Electronics Cooling Instl (FTAO) - 12976100	
1	PAFZZ	5310-00-761-6882	96906	MS51967-2	NUT,PLAIN,HEXAGON UOC: [redacted]	4
2	PAFZZ	5310-00-582-5965	80205	MS35338-44	WASHER,LOCK UOC: [redacted]	15
3	PAFZZ	4820-01-457-9840	19200	12976104	VALVE ASSEMBLY	2
4	PAFZZ	5305-00-958-5245	80205	MS35190-288	SCREW,MACHINE	4
5	PAFZZ	5305-00-984-6195	80205	MS35206-247	SCREW,MACHINE UOC: [redacted]	8
6	PAFZZ	5310-00-559-0070	80205	MS35333-38	WASHER,LOCK UOC: [redacted]	8
7	PAFZZ	5310-00-809-8544	96906	MS27183-7	WASHER,FLAT UOC: [redacted]	8
8	PAFZZ	4140-01-460-5968	19200	12976108	BOX,FAN MOUNTING	1
9	PAFZZ	4140-01-460-6912	19200	12976105	FAN,VANEAXIAL UOC: [redacted]	3
10	PAFZZ	4140-01-228-8356	82877	501178	GUARD,FAN IMPELLER	1
11	PAFZZ	5310-00-809-4058	96906	MS27183-10	WASHER,FLAT	3
12	PAFZZ	5305-00-068-0508	05047	AES01C250750AW9A91	SCREW,CAP,HEXAGON H UOC: [redacted]	7
13	PAFZZ	4140-01-460-7202	19200	12974707	GUARD,FAN IMPELLER UOC: [redacted]	3
14	PAFZZ	5365-01-457-1548	19200	12976715	SPACER,SPECIAL SHAP UOC: [redacted]	1
15	PAFZZ	5310-00-004-5034	26916	004-003005-059	WASHER,LOCK UOC: [redacted]	8
16	PAFZZ	5305-00-724-7228	05047	AES01C625C00AW9A91	SCREW,CAP,HEXAGON H UOC: [redacted]	2
17	PAFZZ	5305-00-724-7223	80204	B1821BH063C225N	SCREW,CAP,HEXAGON H UOC: [redacted]	6
18	PAFZZ	5365-01-457-2156	19200	12976713	SPACER,PLATE UOC: [redacted]	1
19	PAFZZ	5365-01-303-1869	80205	NAS43DD4-56N	SPACER,SLEEVE UOC: [redacted]	8
20	PAFZZ	5340-01-459-5527	19200	12976107	PLATE,MOUNTING UOC: [redacted]	2
21	PAFZZ	5340-01-459-6017	19200	12976102	COVER,ACCESS UOC: [redacted]	1

(1) ITEM NO.	(2) SMR CODE	(3) NSN	(4) CAGEC	(5) PART NUMBER	(6) DESCRIPTION AND USABLE ON CODE (UOC)	(7) QTY
22	PAFZZ	5305-00-225-3841	05047	AES01C250A37AW9A91	SCREW,CAP,HEXAGON H ..... UOC: [redacted]	4

END OF FIGURE

MAINTAINER

CBRN GPFU INSTL,TURRET (FTAP) - 12933761

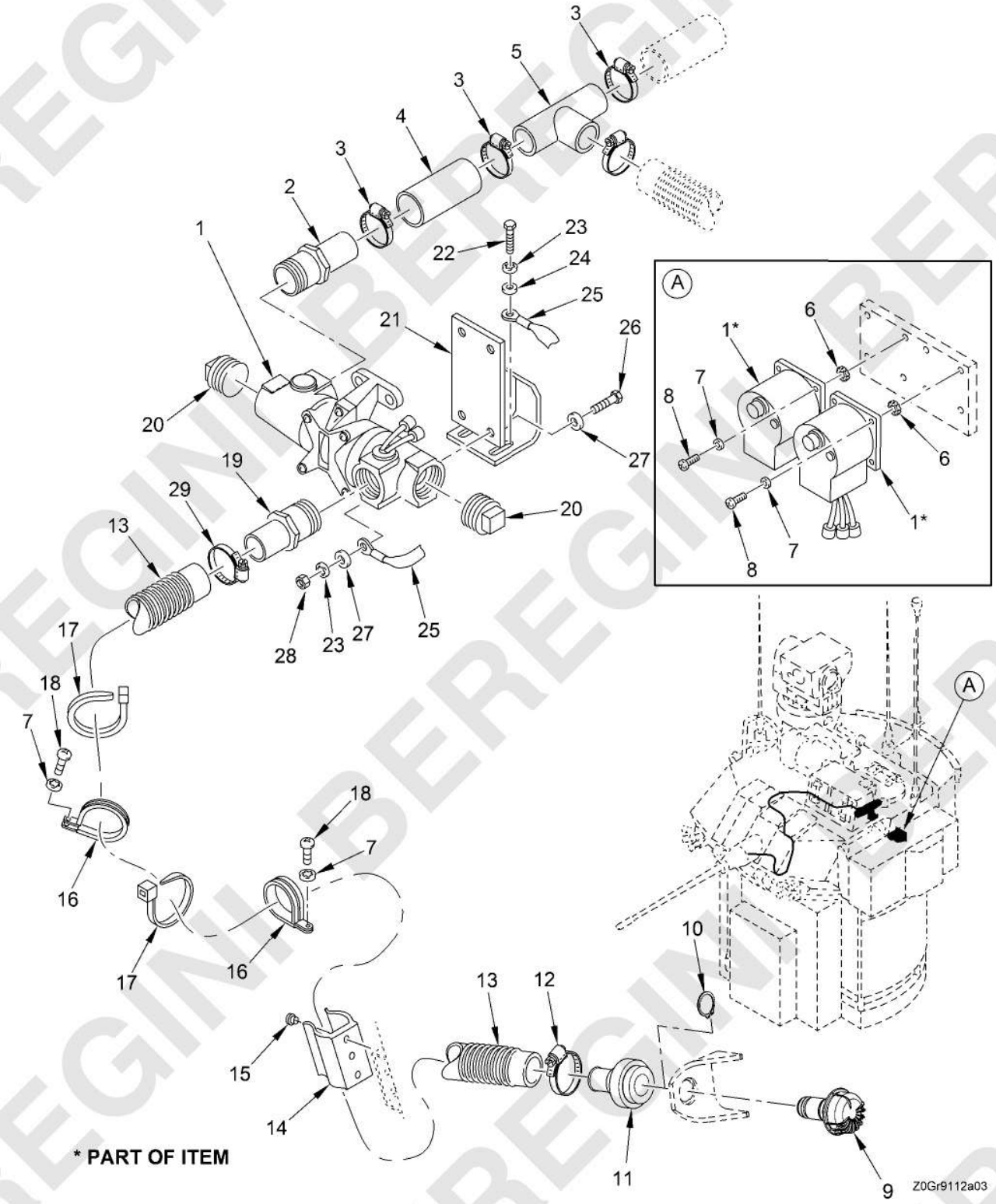

Figure 210. CBRN GPFU Instl, Turret (FTAP) - 12933761
(Sheet 1 of 2)

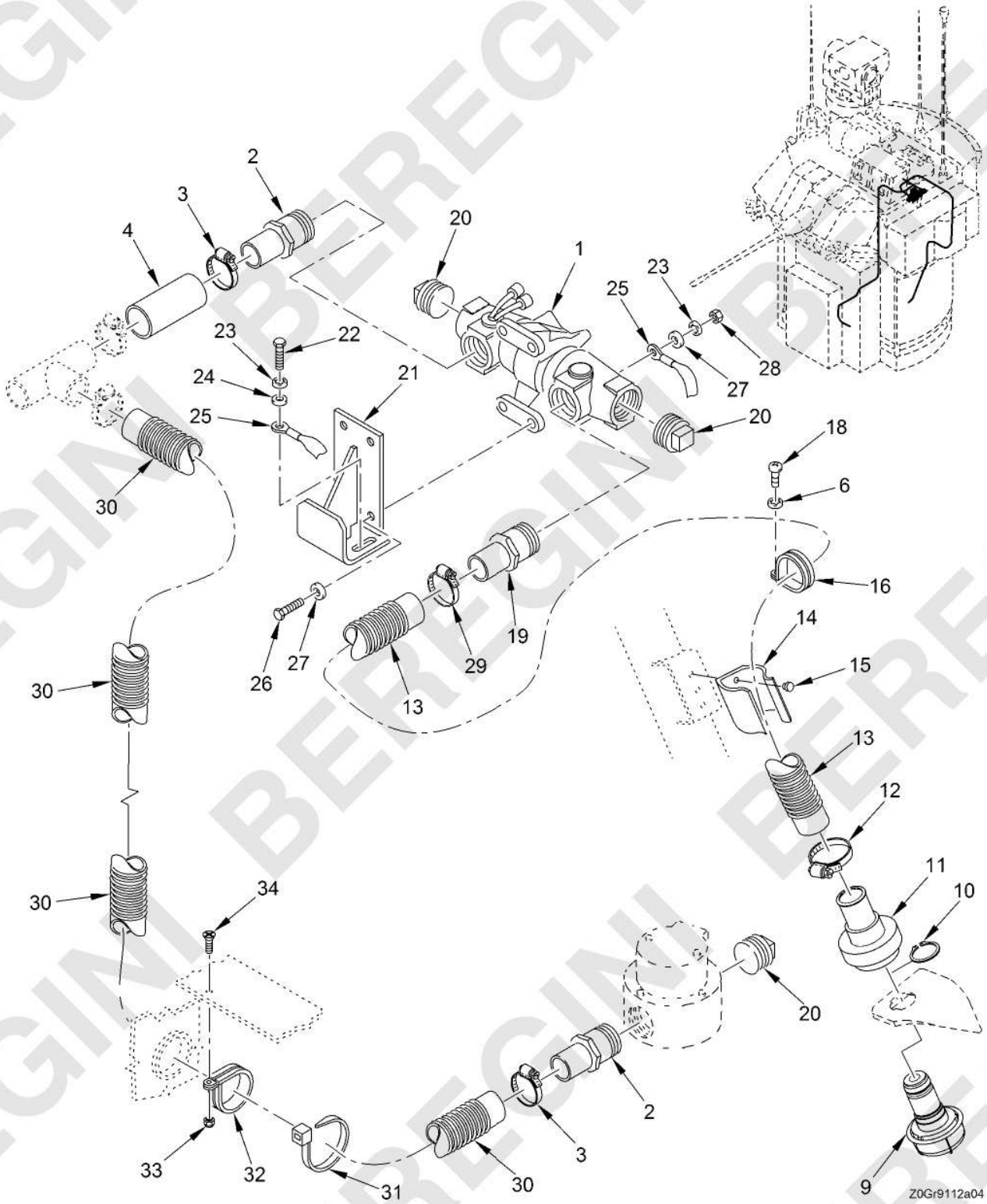

Figure 210. CBRN GPFU Instl, Turret (FTAP) - 12933761
(Sheet 2 of 2)

(1) ITEM NO.	(2) SMR CODE	(3) NSN	(4) CAGEC	(5) PART NUMBER	(6) DESCRIPTION AND USABLE ON CODE (UOC)	(7) QTY
					GROUP FTAP TURRET CBRN GPFU INSTL	
					FIGURE 210 CBRN GPFU Instl, Turret (FTAP) - 12933761	
1	PAFFF	4240-00-807-6856	81349	MILH51191	HEATER,AIR,ELECTRIC SEE FIG. 163 FOR BREAKDOWN	2
2	PAFZZ	4730-01-198-0571	19207	12329067	ADAPTER,STRAIGHT,PI	3
3	PAFZZ	4730-01-567-9422	58536	AA52506-F-016	CLAMP,HOSE	6
4	MFFZZ		19200	12933761-2	HOSE,2.75 IN LG MAKE FROM HOSE P/N 12350526-1 (19207)	2
5	PAFZZ	4730-01-194-5590	19207	12329068	TEE,TUBE	1
6	PAFZZ	5310-00-080-9786	96906	MS45904-60	WASHER,LOCK	8
7	PAFZZ	5310-00-576-5752	80205	MS35333-39	WASHER,LOCK	11
8	PAFZZ	5305-00-984-6214	80205	MS35206-267	SCREW,MACHINE	8
9	PAFZZ	4730-01-138-7152	81361	C5-19-1900-1	COUPLING HALF,QUICK	2
10	PAFZZ	5325-00-514-0393	96906	MS16624-4087	RING,RETAINING	2
11	PAFZZ	4240-00-007-9453	81361	B5-19-1829	CONNECTOR,ORIFICE A	2
12	PAFZZ	4730-00-269-3760	96906	MS22064-5	CLAMP,HOSE	2
13	PAFZZ	4720-00-279-0093	81361	C5-19-916-2	HOSE,AIR BREATHING	2
14	PAFZZ	5340-01-009-6848	81349	M24066/2-346	CLIP,SPRING TENSION	2
15	PAFZZ	5320-01-192-2248	96906	MS24662-173	RIVET,BLIND	6
16	PAFZZ	5340-00-200-3045	81343	AS21919WDG24	CLAMP,LOOP	3
17	PAFZZ	5975-00-156-3253	81343	MS3367-2-9	STRAP,TIEDOWN,ELECT	3
18	PAFZZ	5305-00-984-6210	80205	MS35206-263	SCREW,MACHINE	3
19	PAFZZ	4730-00-808-5089	81361	B5-19-1676-2	ADAPTER,STRAIGHT,PI	2
20	PAFZZ	4730-00-221-2141	96906	MS20913-8S	PLUG,PIPE	5
21	PAFZZ	5340-01-487-1108	19200	12987624	BRACKET,MOUNTING	2
22	PAFZZ	5305-00-068-0508	05047	AES01C250750AW9A91	SCREW,CAP,HEXAGON H	4
23	PAFZZ	5310-00-550-1130	80205	MS35333-40	WASHER,LOCK	12
24	PAFZZ	5310-00-809-4058	96906	MS27183-10	WASHER,FLAT	4
25	PAFZZ	5999-01-463-0569	19200	12976747	STRIP,ELECTRICAL GR	2
26	PAFZZ	5305-00-225-3843	80204	B1821BH025C100N	SCREW,CAP,HEXAGON H	8
27	PAFZZ	5310-00-141-1795	80205	NAS1149F0463P	WASHER,FLAT	16
28	PAFZZ	5310-00-761-6882	96906	MS51967-2	NUT,PLAIN,HEXAGON	8
29	PAFZZ	4730-00-908-3194	58536	A-A-52506-F-12	CLAMP,HOSE	2

(1) ITEM NO.	(2) SMR CODE	(3) NSN	(4) CAGEC	(5) PART NUMBER	(6) DESCRIPTION AND USABLE ON CODE (UOC)	(7) QTY
30	MFFZZ		19200	12933761-1	HOSE,78.00 IN LG MAKE FROM HOSE P/N 12350526-1 (19207)	1
31	PAFZZ	5975-00-570-9598	81343	MS3367-7-9	STRAP,TIEDOWN,ELECT	1
32	PAFZZ	5340-00-200-3045	81343	AS21919WDG24	CLAMP,LOOP	4
33	PAFZZ	5310-00-877-5797	80205	MS21044N3	NUT,SELF-LOCKING,HE	1
34	PAFZZ	5305-00-995-3444	80205	MS35207-266	SCREW,MACHINE	1
					END OF FIGURE	

BEREGINI BEREGINI BEREGINI

MAINTAINER

DAGR INSTALLATION (FTAQ) - 12992145

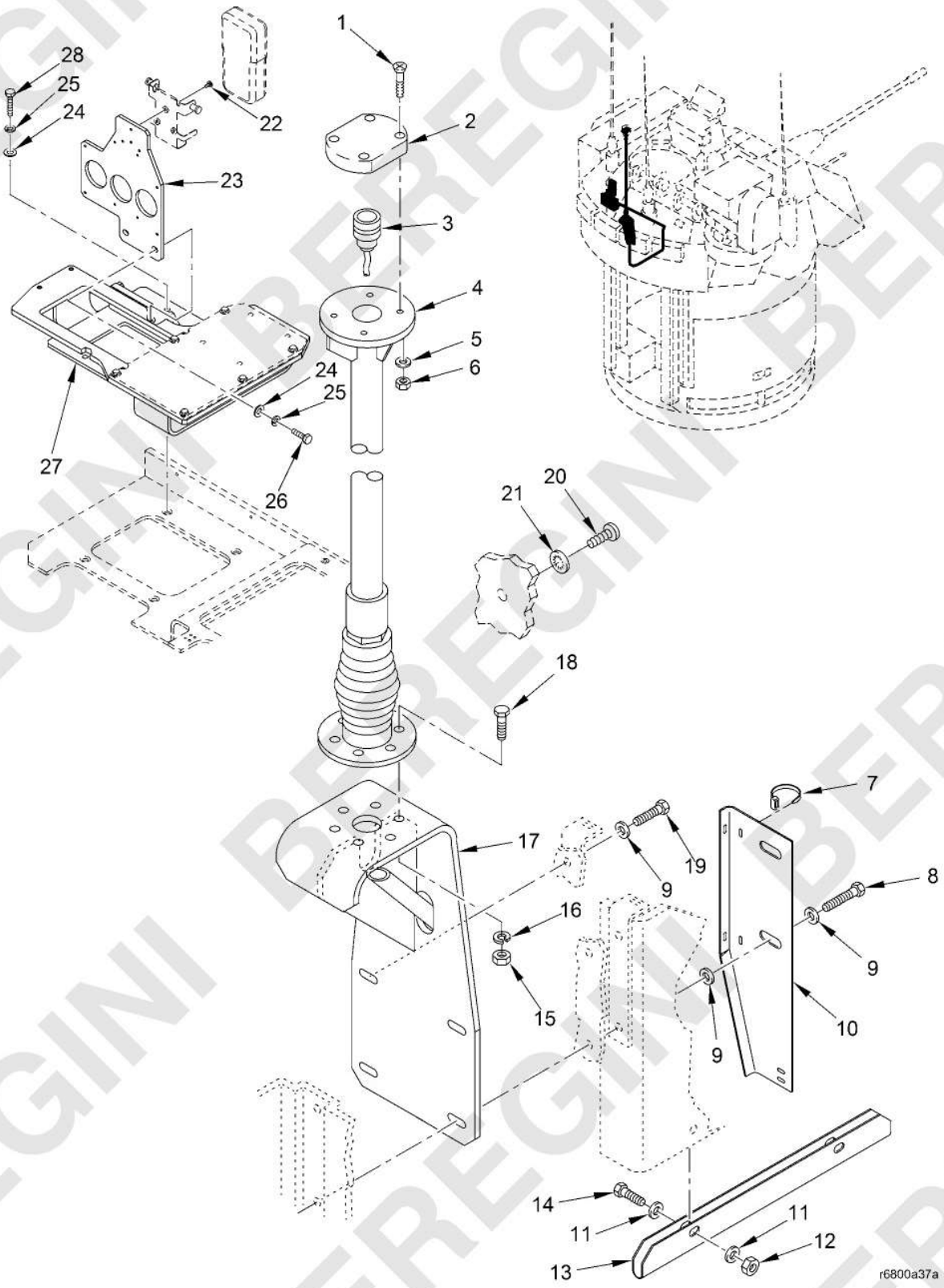

Figure 211. DAGR Installation (FTAQ) - 12992145

(1) ITEM NO.	(2) SMR CODE	(3) NSN	(4) CAGEC	(5) PART NUMBER	(6) DESCRIPTION AND USABLE ON CODE (UOC)	(7) QTY
					GROUP FTAQ DAGR INSTALLATION	
					FIGURE 211 DAGR Installation (FTAQ) - 12992145	
1	PAFZZ	5305-00-957-6638	80205	MS35190-243	SCREW,MACHINE	4
2	PAFZZ	5985-01-521-1775	13499	013-1981-020	ANTENNA	1
3	PAFZZ	5995-01-461-4522	0ERB9	12956607	CABLE ASSEMBLY,RADI 2W81	1
4	PAFZZ	5985-01-547-5953	19200	13007349	ANTENNA TOWER	1
5	PAFZZ	5310-01-303-4701	96906	MS51412-1	WASHER,FLAT	4
6	PAFZZ	5310-00-081-8087	80205	MS21044N06	NUT,SELF-LOCKING,HE	4
7	PAFZZ	5975-00-074-2072	81343	MS3367-1-9	STRAP,TIEDOWN,ELECT	3
8	PAFZZ	5305-00-071-2510	80204	B1821BH025C175N	SCREW,CAP,HEXAGON H	2
9	PAFZZ	5310-00-058-1305	19207	10910174-20	WASHER,FLAT	6
10	PAFZZ	5975-01-458-8008	19200	12976352	PROTECTOR,ELECTRICA	1
11	PAFZZ	5310-01-274-3255	96906	MS27183-52	WASHER,FLAT	4
12	PAFZZ	5310-00-088-1251	81349	M45913/1-4CG5Z	NUT,SELF-LOCKING,HE	2
13	PAFZZ	5975-01-458-1946	19200	12976350	PROTECTOR,ELECTRICA	1
14	PAFZZ	5305-00-225-3842	05047	AES01C250A12AW9A91	SCREW,CAP,HEXAGON H	2
15	PAFZZ	5310-00-905-0762	96906	MS51967-3	NUT,PLAIN,HEXAGON	6
16	PAFZZ	5310-00-582-5965	80205	MS35338-44	WASHER,LOCK	6
17	PAFZZ	5985-01-458-1629	19200	12976354	BASE,ANTENNA SUPPOR	1
18	PAFZZ	5305-00-225-3843	80204	B1821BH025C100N	SCREW,CAP,HEXAGON H	6
19	PAFZZ	5305-00-071-2509	80204	B1821BH025C150N	SCREW,CAP,HEXAGON H	2
20	PAFZZ	5305-00-988-1723	80205	MS35206-279	SCREW,MACHINE	1
21	PAFZZ	5310-00-550-1130	80205	MS35333-40	WASHER,LOCK	1
22	PAFZZ	5305-00-059-3656	80205	MS51958-60	SCREW,MACHINE	3
23	PAFZZ	1005-01-675-2000	19200	13061620	PLATE [redacted],DAGR	1
24	PAFZZ	5310-00-625-5756	80205	MS15795-812	WASHER,FLAT	6
25	PAFZZ	5310-00-974-6623	80205	MS35338-140	WASHER,LOCK	6
26	PAFZZ	5306-00-226-4827	05047	AEB02C312A00AW9A81	BOLT,MACHINE	2
27	PAFZZ	2510-01-675-3136	19200	13072154	TRAY,SUPPORT	1
28	PAFZZ	5305-00-226-4830	80204	B1821BH031C138N	BOLT,MACHINE	4
					END OF FIGURE	

0212-3/4 blank

BEREGINI BEREGINI BEREGINI

MAINTAINER

25MM FEED SYSTEM INSTL (FTAR) - 12976629

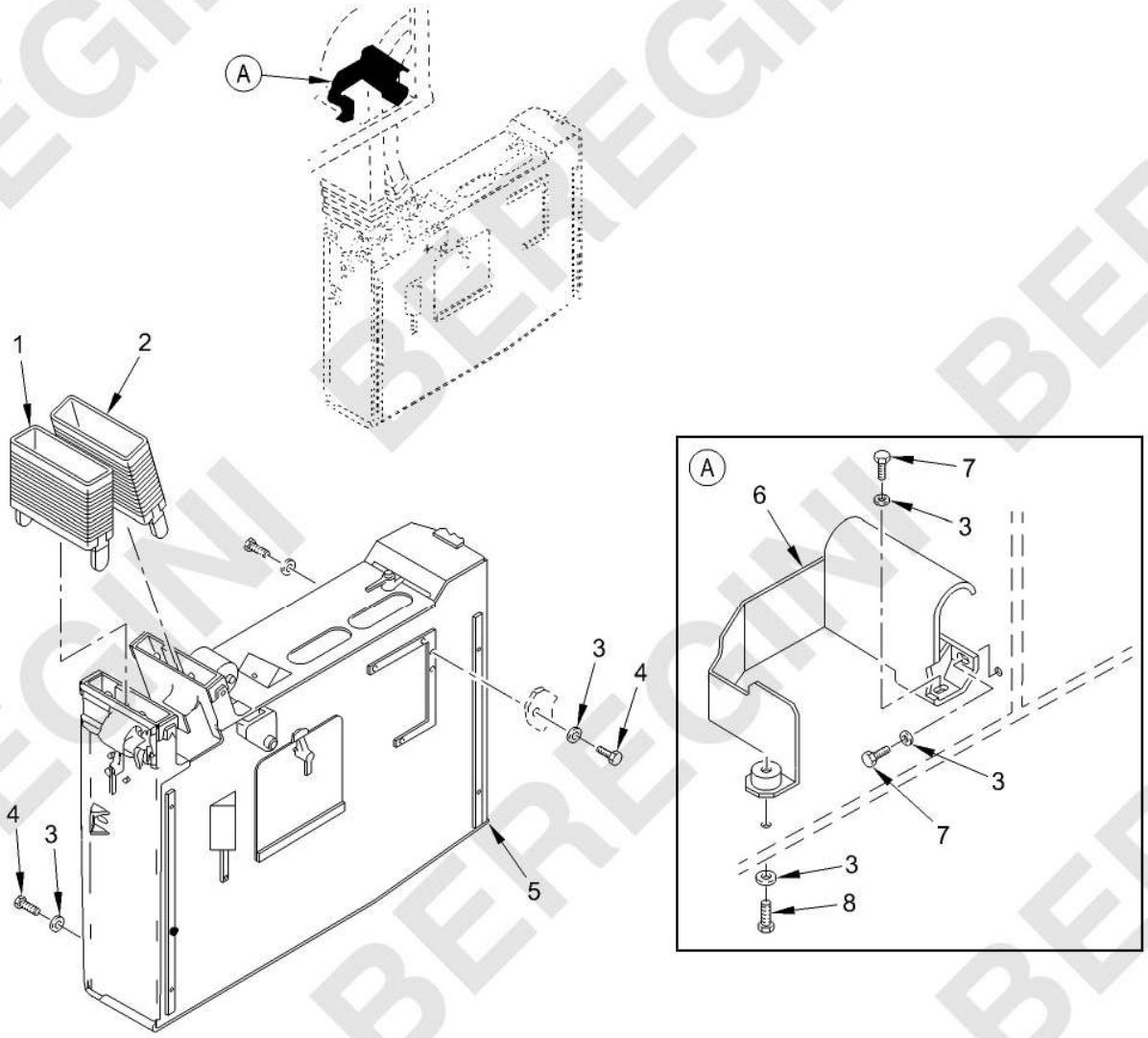

Figure 212. 25MM Feed System Instl (FTAR) - 12976629

(1) ITEM NO.	(2) SMR CODE	(3) NSN	(4) CAGEC	(5) PART NUMBER	(6) DESCRIPTION AND USABLE ON CODE (UOC)	(7) QTY
					GROUP FTAR 25MM FEED SYSTEM INSTL	
					FIGURE 212 25MM Feed System Instl (FTAR) - 12976629	
1	PAFFF	1005-01-176-6085	19207	12328757-1	CHUTE,AMMUNITION SEE FIG. 216 FOR BREAKDOWN.....	1
2	PAFFF	1005-01-176-6086	19207	12328757-2	CHUTE,AMMUNITION SEE FIG. 217 FOR BREAKDOWN.....	1
3	PAFZZ	5310-00-080-6004	96906	MS27183-14	WASHER,FLAT	16
4	PAFZZ	5305-01-140-9118	80204	B1821BH038C088N	SCREW,CAP,HEXAGON H	13
5	AFFFF		19200	12976628-1	CAN,AMMUNITION ASSE SEE FIG. 213 FOR BREAKDOWN.....	1
6	PAFZZ	1005-01-112-6276	19207	12294556	GUARD,AMMUNITION CH	1
7	PAFZZ	5305-00-543-4372	05047	AES01C375750AW9A91	SCREW,CAP,HEXAGON H	2
8	PAFZZ	5305-00-638-8920	05047	AES01C375B25AW9A91	SCREW,CAP,HEXAGON H	1
					END OF FIGURE	

BEREGINI BEREGINI BEREGINI

MAINTAINER

CAN, AMMO ASSEMBLY, 25MM (FTARA) - 12976628-1

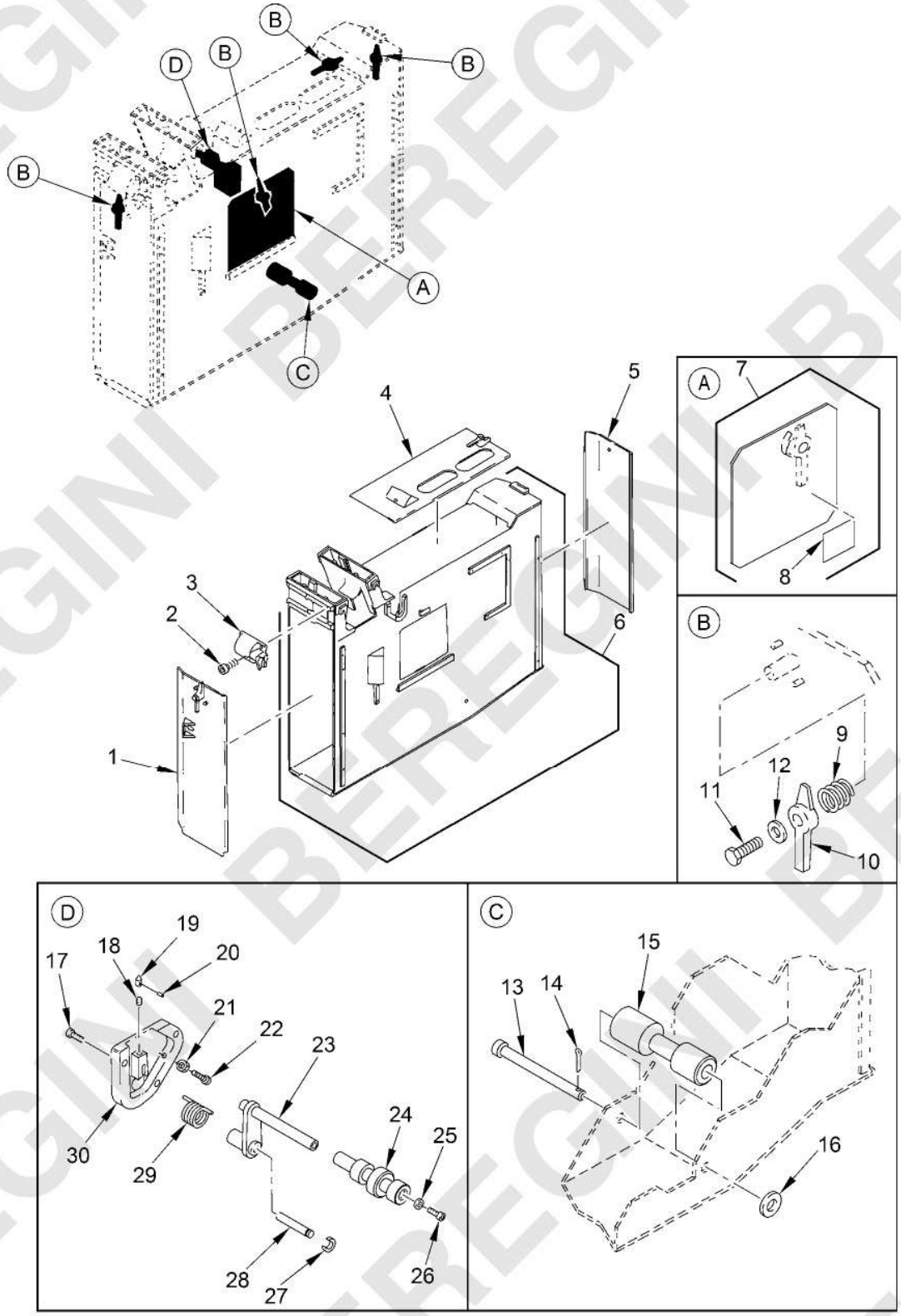

Figure 213. Can, Ammo Assembly, 25MM (FTARA) - 12976628-1

(1) ITEM NO.	(2) SMR CODE	(3) NSN	(4) CAGEC	(5) PART NUMBER	(6) DESCRIPTION AND USABLE ON CODE (UOC)	(7) QTY
					GROUP FTARA 25MM AMMO CAN ASSEMBLY	
					FIGURE 213 Can, Ammo Assembly, 25MM (FTARA) - 12976628-1	
1	PAFFF	5340-01-109-8098	19207	12317156	DOOR,ACCESS SEE FIG. 214 FOR BREAKDOWN	1
2	PAFZZ	5305-00-604-0041	80205	NAS1352-4-12P	SCREW,CAP,SOCKET HE	8
3	PAFFF	1005-01-101-6251	19200	12294778	DRUM,AMMUNITION,MAC SEE FIG. 215 FOR BREAKDOWN	2
4	PAFZZ	5340-01-567-4543	19200	13015021	AMMO CAN DOOR,25MM	1
5	PAFFF	5340-01-113-0667	19207	12317157	DOOR,ACCESS SEE FIG. 214 FOR BREAKDOWN	1
6	PAFZZ	1005-01-567-3012	19200	12976627-60	BOX,AMMUNITION	1
7	PAFZZ	5342-01-110-5423	19207	12317158	DOOR,ACCESS	1
8	PAFZZ	9905-01-204-5828	19207	12308383	.PLATE,INSTRUCTION	1
9	PAFZZ	5360-01-183-2971	19207	12317125-1	SPRING,HELICAL,TORS	4
10	PAFZZ	1005-01-177-2665	19207	12317155	HANDLE,LATCH	4
11	PAFZZ	5305-00-071-2506	05047	AES01C250500AW9A91	SCREW,CAP,HEXAGON H	4
12	PAFZZ	5310-00-823-8804	96906	MS27183-9	WASHER,FLAT	4
13	PAFZZ	5315-01-096-5144	19207	12294408	PIN,STRAIGHT,HEADED	1
14	PAFZZ	5315-00-059-0206	80205	MS24665-491	PIN,COTTER	1
15	PAFZZ	1005-01-118-7515	19207	12295107	ROLLER,AMMO CAN 25	1
16	PAFZZ	5310-00-809-5998	96906	MS27183-18	WASHER,FLAT	1
17	PAFZZ	5305-00-978-9394	80205	NAS1352-6-16P	SCREW,CAP,SOCKET HE	3
18	PAFZZ	5360-00-574-0050	96906	MS24585-1188	SPRING,HELICAL,COMP	1
19	PAFZZ	5315-01-102-7815	19200	12295224	PIN,STRAIGHT,HEADLE	1
20	PAFZZ	5315-00-844-4790	80205	MS16562-25	PIN,SPRING	1
21	PAFZZ	5310-00-851-2682	96906	MS35691-17	NUT,PLAIN,HEXAGON	1
22	PAFZZ	5305-01-174-5383	19207	12323319	SCREW,CAP,HEXAGON H	1
23	PAFZZ	1005-01-101-6248	19200	12295248	RETAINER ASSEMBLY,A	1
24	PAFZZ	3040-01-099-0162	19207	12295228	SHAFT,SHOULDERED	1
25	PAFZZ	5310-00-209-0026	96906	MS20002-5	WASHER,FLAT	1
26	PAFZZ	5305-00-983-5344	96906	MS16997-76	SCREW,CAP,SOCKET HE	1
27	PAFZZ	5325-01-469-9953	96906	MS3215-2050	RING,RETAINING	1
28	PAFZZ	5315-01-112-2595	19207	12295225	PIN,GROOVED,HEADLES	1
29	PAFZZ	5360-01-102-7889	19200	12295207	SPRING,HELICAL,TORS	1

(1) ITEM NO.	(2) SMR CODE	(3) NSN	(4) CAGEC	(5) PART NUMBER	(6) DESCRIPTION AND USABLE ON CODE (UOC)	(7) QTY
30	PAFZZ	1005-01-110-3421	19207	12295226	COVER,AMMUNITION CA	1
					END OF FIGURE	

MAINTAINER

ACCESS DOOR (FTARAB, FTARAE) - 12317156, 12317157

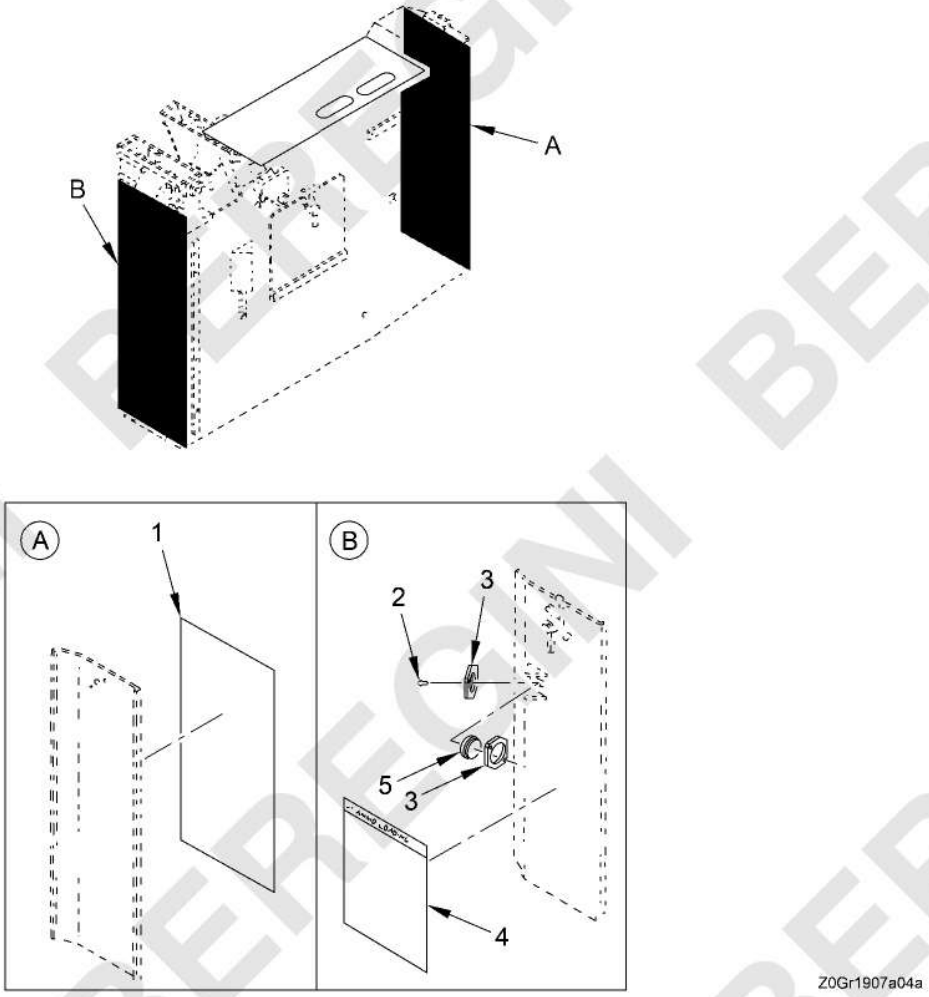

Figure 214. Access Door (FTARAB, FTARAE) - 12317156, 12317157

(1) ITEM NO.	(2) SMR CODE	(3) NSN	(4) CAGEC	(5) PART NUMBER	(6) DESCRIPTION AND USABLE ON CODE (UOC)	(7) QTY
					GROUP FTARAB, FTARAE ACCESS DOOR	
					FIGURE 214 Access Door (FTARAB, FTARAE) - 12317156, 12317157	
1	PAFZZ	9905-01-111-7759	19207	12295639	PLATE,INSTRUCTION	1
2	PAFZZ	5320-00-957-2514	80205	MS20604AD4W4	RIVET,BLIND	2
3	PAFZZ	1005-01-111-4010	19207	12294985	PLATE,RETAINER,REFL	2
4	PAFZZ	9905-01-111-7758	19207	12295638	PLATE,INSTRUCTION	1
5	PAFZZ	1005-01-119-5644	19207	12297964	RETROREFLECTOR	1
					END OF FIGURE	

BEREGINI BEREGINI BEREGINI

MAINTAINER

DRUM, AMMO, MACHINED (FTARAC) - 12294778

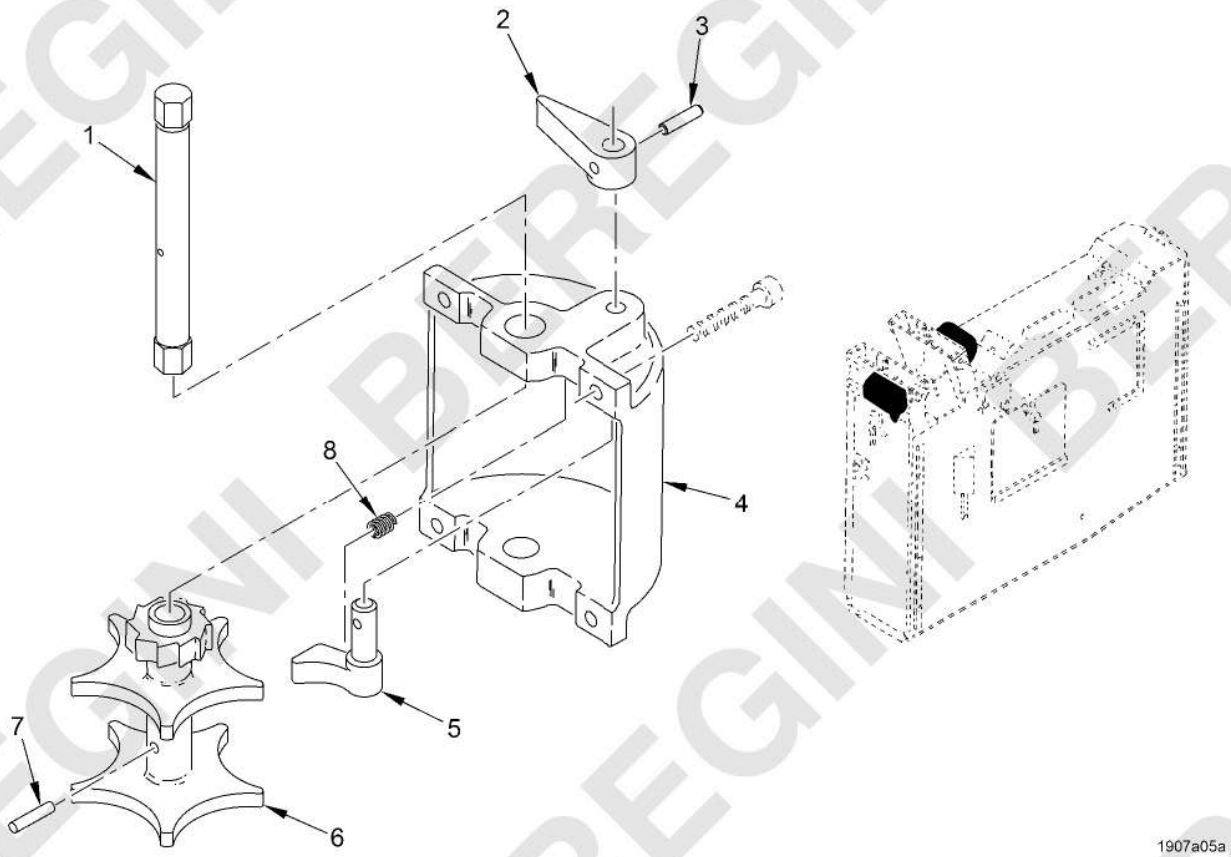

Figure 215. Drum, Ammo, Machined (FTARAC) - 12294778

(1) ITEM NO.	(2) SMR CODE	(3) NSN	(4) CAGEC	(5) PART NUMBER	(6) DESCRIPTION AND USABLE ON CODE (UOC)	(7) QTY
					GROUP FTARAC MACHINED AMMO DRUM	
					FIGURE 215 Drum, Ammo, Machined (FTARAC) - 12294778	
1	PAFZZ	3040-01-110-9871	19207	12294340	SHAFT,STRAIGHT	1
2	PAFZZ	5340-01-112-5150	19207	12294324	LEVER,LOCK-RELEASE	1
3	PAFZZ	5315-01-058-3487	80205	NAS561P6-12	PIN,SPRING	1
4	XAFZZ		19207	12294777	HOUSING	1
5	PAFZZ	3040-01-112-1664	19207	12276658	PAWL	1
6	PAFZZ	3020-01-115-3975	19207	12276729	SPROCKET WHEEL	1
7	PAFZZ	5315-00-844-3663	80205	MS16562-63	PIN,SPRING	1
8	PAFZZ	5360-01-045-5461	96906	MS24585-1067	SPRING,HELICAL,COMP	1
					END OF FIGURE	

BEREGINI BEREGINI BEREGINI

MAINTAINER

CHUTE, AMMUNITION AP (FTARC) - 12328757-1

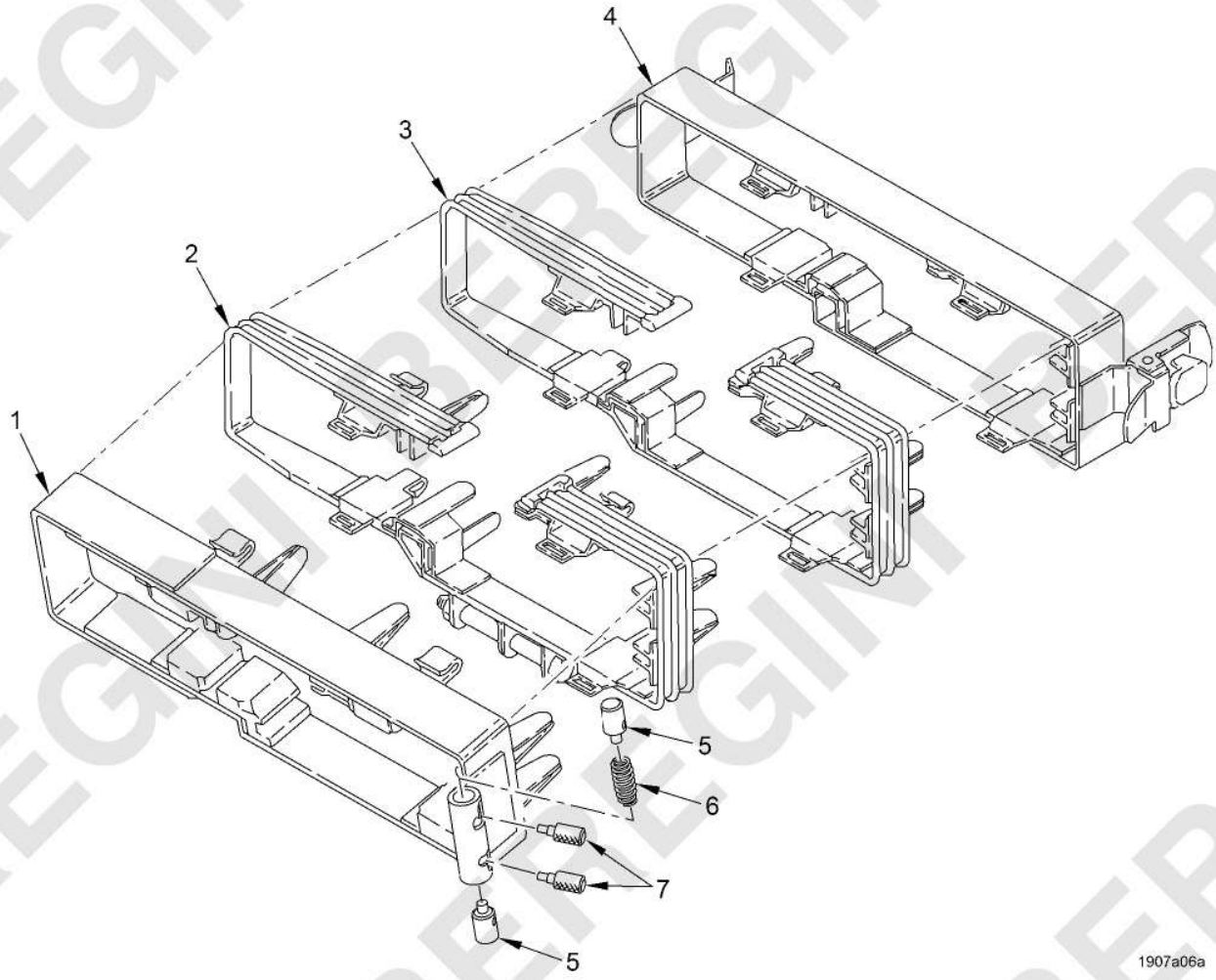

Figure 216. Chute, Ammunition (FTARC) - 12328757-1

(1) ITEM NO.	(2) SMR CODE	(3) NSN	(4) CAGEC	(5) PART NUMBER	(6) DESCRIPTION AND USABLE ON CODE (UOC)	(7) QTY
					GROUP FTARC AMMUNITION AP CHUTE	
					FIGURE 216 Chute, Ammunition (FTARC) - 12328757-1	
1	PAFZZ	1005-01-196-2190	98459	S256022-151	END FITTING,EXIT	1
2	PAFZZ	1005-01-167-6468	98459	S257009-152	LINK ASSEMBLY,AMMUN	14
3	PAFZZ	1005-01-150-5799	98459	S257010-152	LINK ASSEMBLY,TURRE	12
4	PAFZZ	1005-01-121-9672	98459	S258004-151	END FITTING	1
5	KFFZZ		98459	831328-001	BOLT PART OF KIT P/N S259008-051....	2
6	KFFZZ		98459	762-206-8	SPRING PART OF KIT P/N S259008-051	1
7	KFFZZ		98459	762-206-7	HANDLE PART OF KIT P/N S259008-051	2
					END OF FIGURE	

BEREGINI BEREGINI BEREGINI

MAINTAINER

CHUTE, AMMUNITION HE (FTARD) - 12328757-2

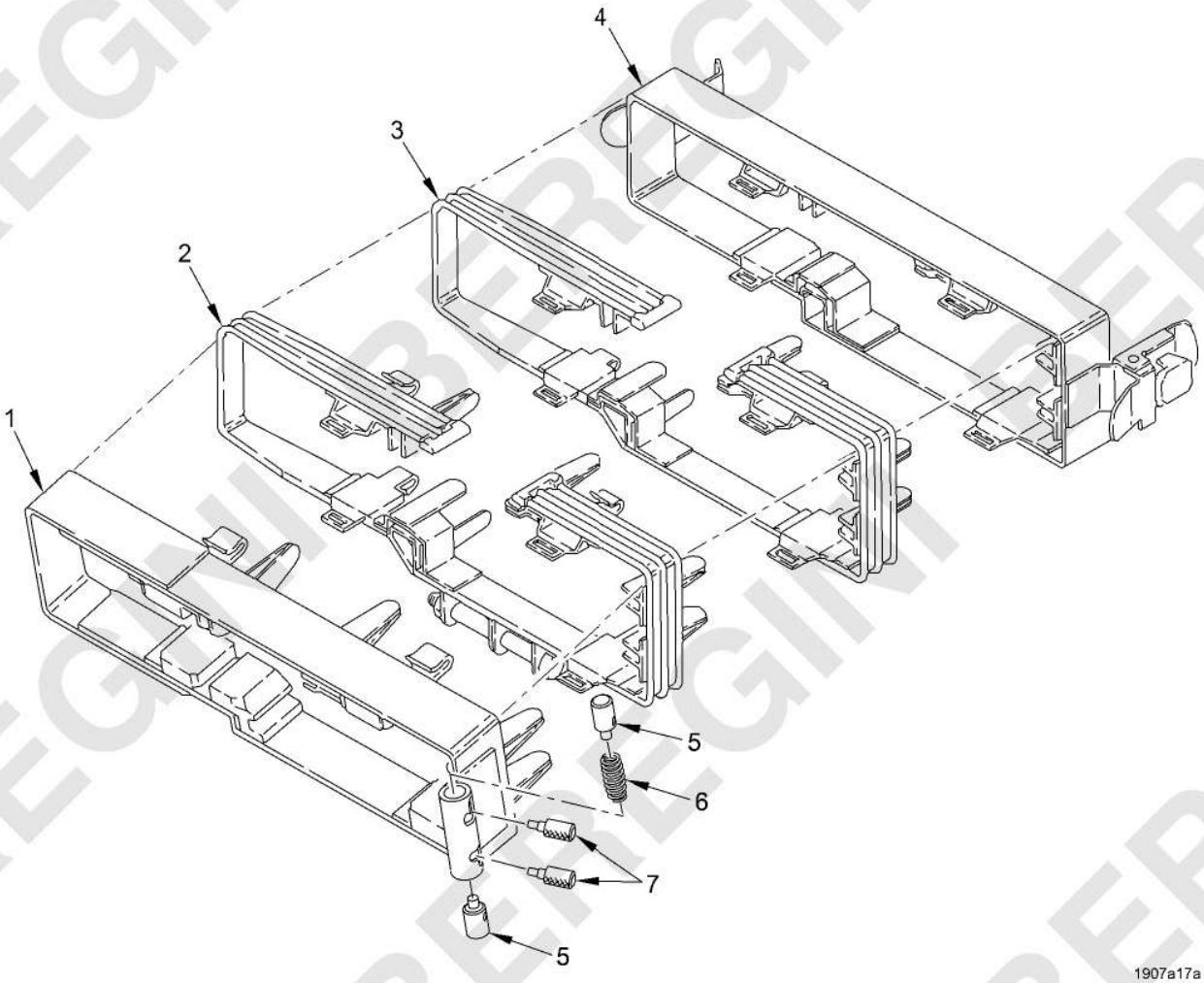

Figure 217. Chute, Ammunition HE (FTARD) - 12328757-2

(1) ITEM NO.	(2) SMR CODE	(3) NSN	(4) CAGEC	(5) PART NUMBER	(6) DESCRIPTION AND USABLE ON CODE (UOC)	(7) QTY
					GROUP FTARD AMMUNITION HE CHUTE	
					FIGURE 217 Chute, Ammunition HE (FTARD) - 12328757-2	
1	PAFZZ	1005-01-196-2191	98459	256022-152	END FITTING,EXIT	1
2	PAFZZ	1005-01-150-5803	98459	S257009-151	CHUTE ASSEMBLY,AMMU	11
3	PAFZZ	1005-01-150-5802	98459	S257010-151	CHUTE ASSEMBLY,AMMU	12
4	PAFZZ	1005-01-150-5800	98459	S258004-152	END FITTING,AMMUNIT	1
5	KFFZZ		98459	831328-001	BOLT PART OF KIT P/N S259008-051....	2
6	KFFZZ		98459	762-206-8	SPRING PART OF KIT P/N S259008-051	1
7	KFFZZ		98459	762-206-7	HANDLE PART OF KIT P/N S259008-051	2
					END OF FIGURE	

BEREGINI BEREGINI BEREGINI

MAINTAINER

BOX AND FEED CHUTE INSTL (FTAS) - 9380118

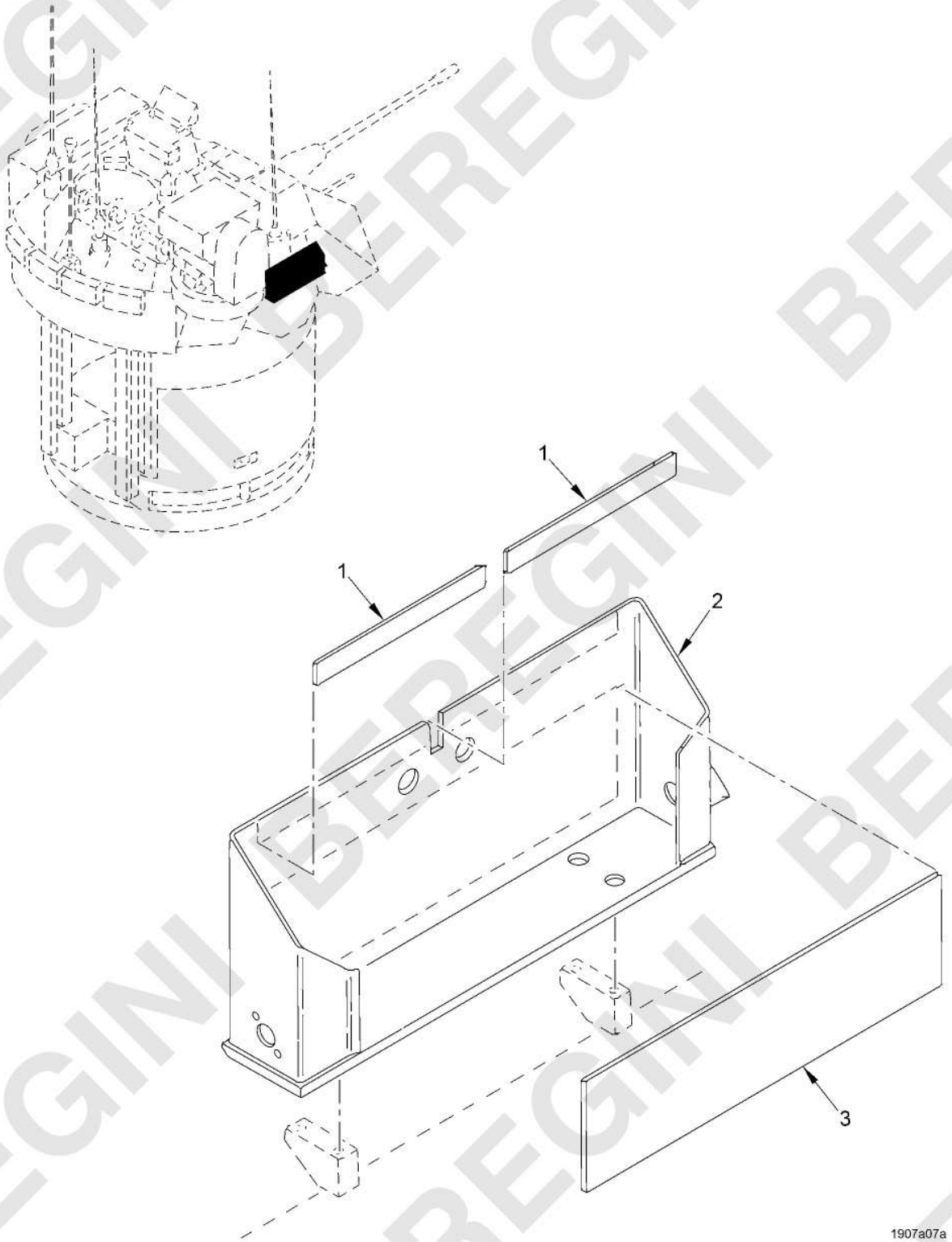

Figure 218. Box and Feed Chute Instl (FTAS) - 9380118
(Sheet 1 of 3)

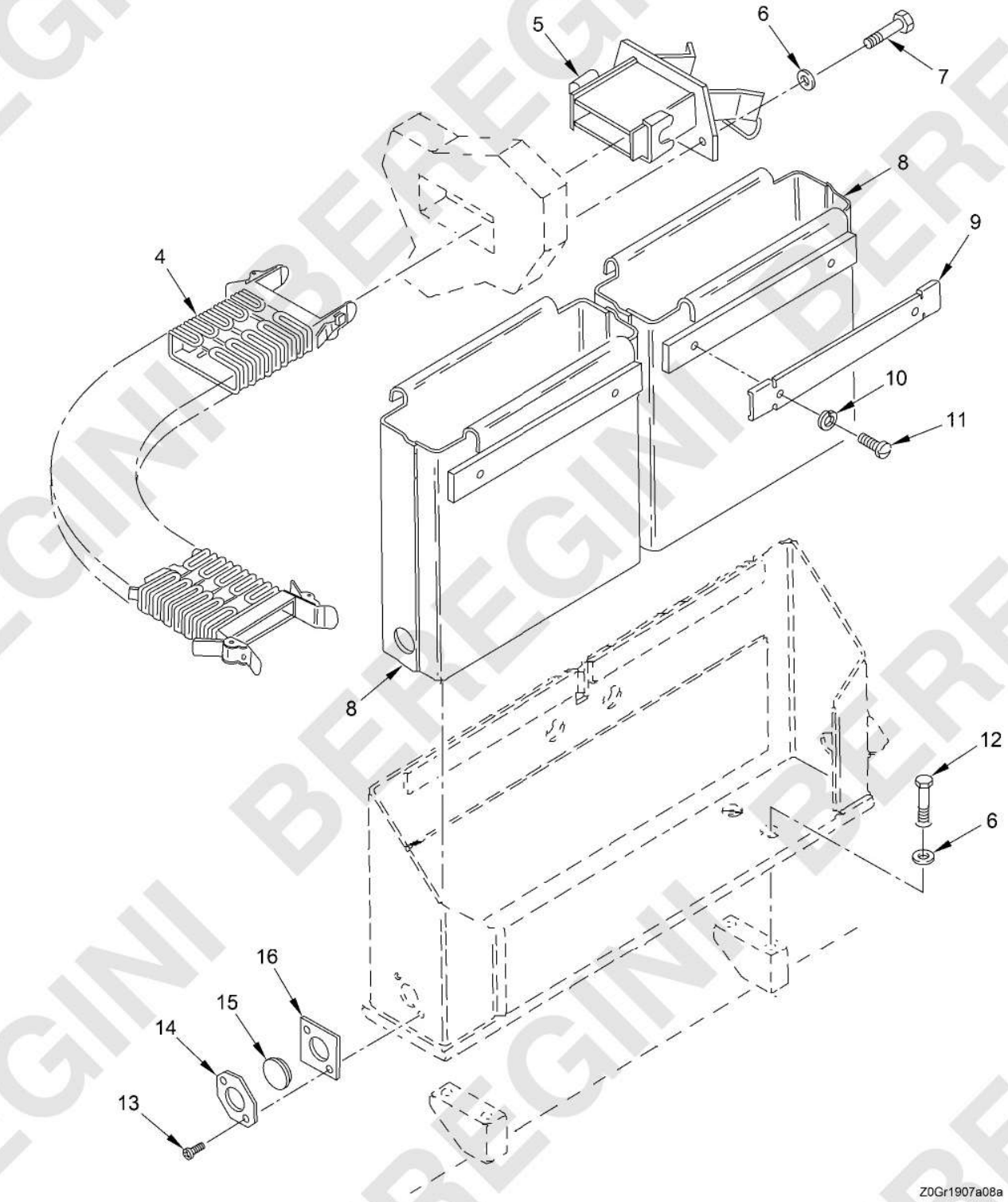

Figure 218. Box and Feed Chute Instl (FTAS) - 9380118
(Sheet 2 of 3)

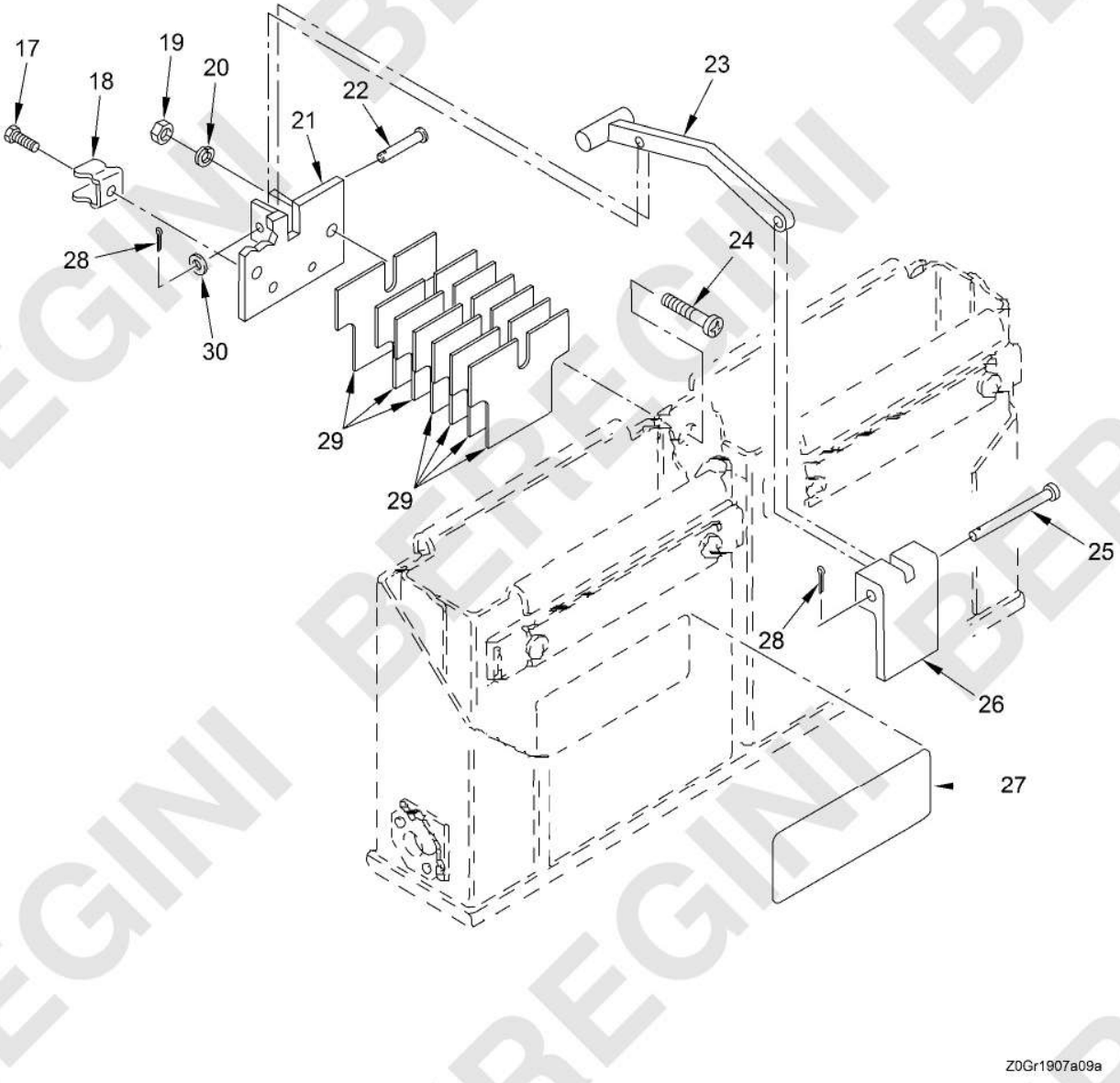

Figure 218. Box and Feed Chute Instl (FTAS) - 9380118
(Sheet 3 of 3)

(1) ITEM NO.	(2) SMR CODE	(3) NSN	(4) CAGEC	(5) PART NUMBER	(6) DESCRIPTION AND USABLE ON CODE (UOC)	(7) QTY
					GROUP FTAS BOX AND FEED CHUTE INSTL	
					FIGURE 218 Box and Feed Chute Instl (FTAS) - 9380118	
1	MFFZZ		19200	9380118-1	PAD,1.00 X 9.50 MAKE FROM RUBBER SHEET P/N 9380441-1(19200)	2
2	PAFZZ	5340-01-266-9600	19200	9379991	BRACKET,MOUNTING	1
3	MFFZZ		19200	9380118-2	PAD,5.50 X 19.50 MAKE FROM RUBBER SHEET P/N 9380441-1(19200)	1
4	PAFFF	1005-01-172-3038	19207	12323398-1	CHUTE,AMMUNITION SEE FIG. 219 FOR BREAKDOWN	1
5	PAFZZ	1005-01-266-9615	19200	9379972	CHUTE,AMMUNITION	1
6	PAFZZ	5310-00-773-7618	80205	MS15795-814	WASHER,FLAT	6
7	PAFZZ	5305-00-068-0510	80204	B1821BH038C100N	SCREW,CAP,HEXAGON H	2
8	PAFZZ	1005-01-273-5986	19200	9379990	BOX MAGAZINE,AMMUNI	2
9	PAFZZ	5340-01-266-9573	19200	9379994	STRIKE,CATCH	2
10	PAFZZ	5310-00-559-0070	80205	MS35333-38	WASHER,LOCK	4
11	PAFZZ	5305-00-984-6191	80205	MS35206-243	SCREW,MACHINE	4
12	PAFZZ	5305-01-140-9118	80204	B1821BH038C088N	SCREW,CAP,HEXAGON H	4
13	PAFZZ	5320-00-957-2514	80205	MS20604AD4W4	RIVET,BLIND	2
14	PAFZZ	1005-01-111-4010	19207	12294985	PLATE,RETAINER,REFL	1
15	PAFZZ	1005-01-119-5644	19207	12297964	RETROREFLECTOR	1
16	PAFZZ	5365-01-266-9585	19200	9380137	SPACER,PLATE	1
17	PAFZZ	5305-00-253-5612	80205	MS21318-15	SCREW,DRIVE	2
18	PAFZZ	5340-00-051-5473	81349	M24066/2-310	CLIP,SPRING TENSION	2
19	PAFZZ	5310-00-477-6768	80205	MS35649-2384	NUT,PLAIN,HEXAGON	2
20	PAFZZ	5310-00-595-7237	80205	MS35333-42	WASHER,LOCK	2
21	PAFZZ	5340-01-267-6165	19200	9379992	BRACKET,LEVER	1
22	PAFZZ	5315-00-081-7015	96906	MS20392-3C31	PIN,STRAIGHT,HEADED	1
23	PAFZZ	5340-01-267-6160	19200	9379989	LEVER,LOCK-RELEASE	1
24	PAFZZ	5305-00-984-5692	96906	MS35206-312	SCREW,MACHINE	2
25	PAFZZ	5315-00-081-7020	80205	MS20392-3C73	PIN,STRAIGHT,HEADED	1
26	PAFZZ	5340-01-267-6159	19200	9379993	LEVER,LOCK-RELEASE	1
27	PAFZZ	9905-01-267-6152	19200	9380135	PLATE,INSTRUCTION	2
28	PAFZZ	5315-00-839-2325	80205	MS24665-132	PIN,COTTER	2
29	PAFZZ	5365-01-267-6157	19200	9380133	SPACER,PLATE	7

(1) ITEM NO.	(2) SMR CODE	(3) NSN	(4) CAGEC	(5) PART NUMBER	(6) DESCRIPTION AND USABLE ON CODE (UOC)	(7) QTY
30	PAFZZ	5310-00-582-5677	80205	MS15795-810	WASHER,FLAT	1
					END OF FIGURE	

MAINTAINER

CHUTE ASSEMBLY (FTASB) - 12323398-1

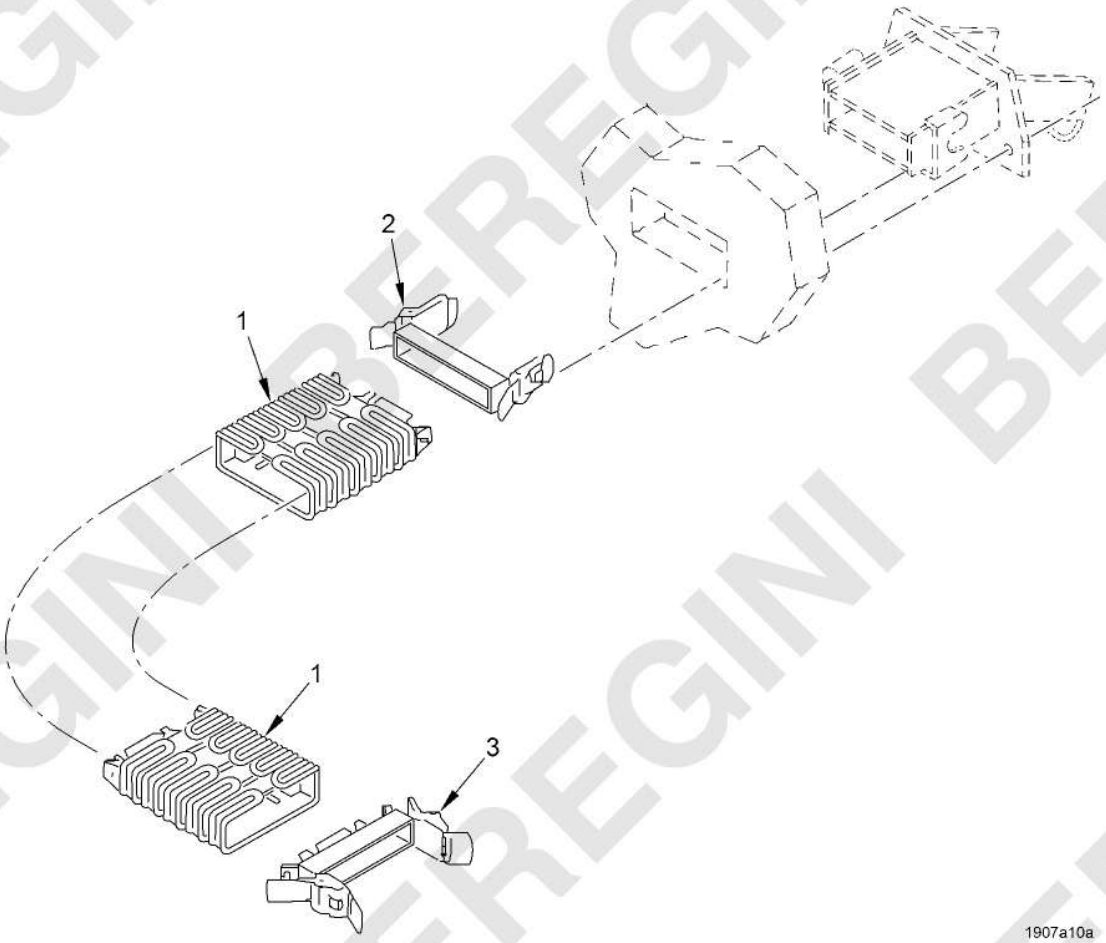

Figure 219. Chute Assembly (FTASB) - 12323398-1

(1) ITEM NO.	(2) SMR CODE	(3) NSN	(4) CAGEC	(5) PART NUMBER	(6) DESCRIPTION AND USABLE ON CODE (UOC)	(7) QTY
					GROUP FTASB CHUTE ASSEMBLY	
					FIGURE 219 Chute Assembly (FTASB) - 12323398-1	
1	PAFZZ	1005-01-048-4848	98459	S767004-151	LINK ASSEMBLY FLEX	30
2	PAFZZ	1005-01-049-5382	98459	S768003-151	ENTRANCE END ASSEMB	1
3	PAFZZ	1005-01-215-8175	98459	766012-152	END FITTING,AMMUNIT	1
					END OF FIGURE	

BEREGINI BEREGINI BEREGINI

MAINTAINER

TOW ROTOR INSTL (FTAT) - 12976040-1

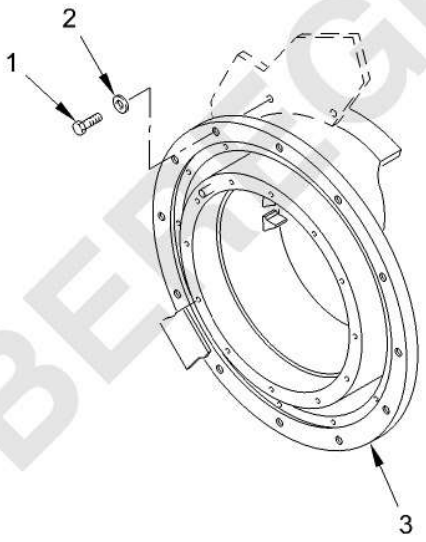

Figure 220. TOW Rotor Instl (FTAT) - 12976040-1

(1) ITEM NO.	(2) SMR CODE	(3) NSN	(4) CAGEC	(5) PART NUMBER	(6) DESCRIPTION AND USABLE ON CODE (UOC)	(7) QTY
					GROUP FTAT TOW ROTOR INSTL	
					FIGURE 220 TOW Rotor Instl (FTAT) - 12976040-1	
1	PAFZZ	5305-00-068-0511	05047	AES01C375A25AW9A91	SCREW,CAP,HEXAGON H	12
2	PAFZZ	5310-00-149-9146	96906	MS20002C6	WASHER,RECESSED	12
3	PBFDD	6105-01-613-1422	19200	13023196	ROTOR ASSEMBLY	1
					END OF FIGURE	

BEREGINI BEREGINI BEREGINI

MAINTAINER

SUPPORT ASSY, TOW LAUNCHER (FTATAB) - 12986346-1

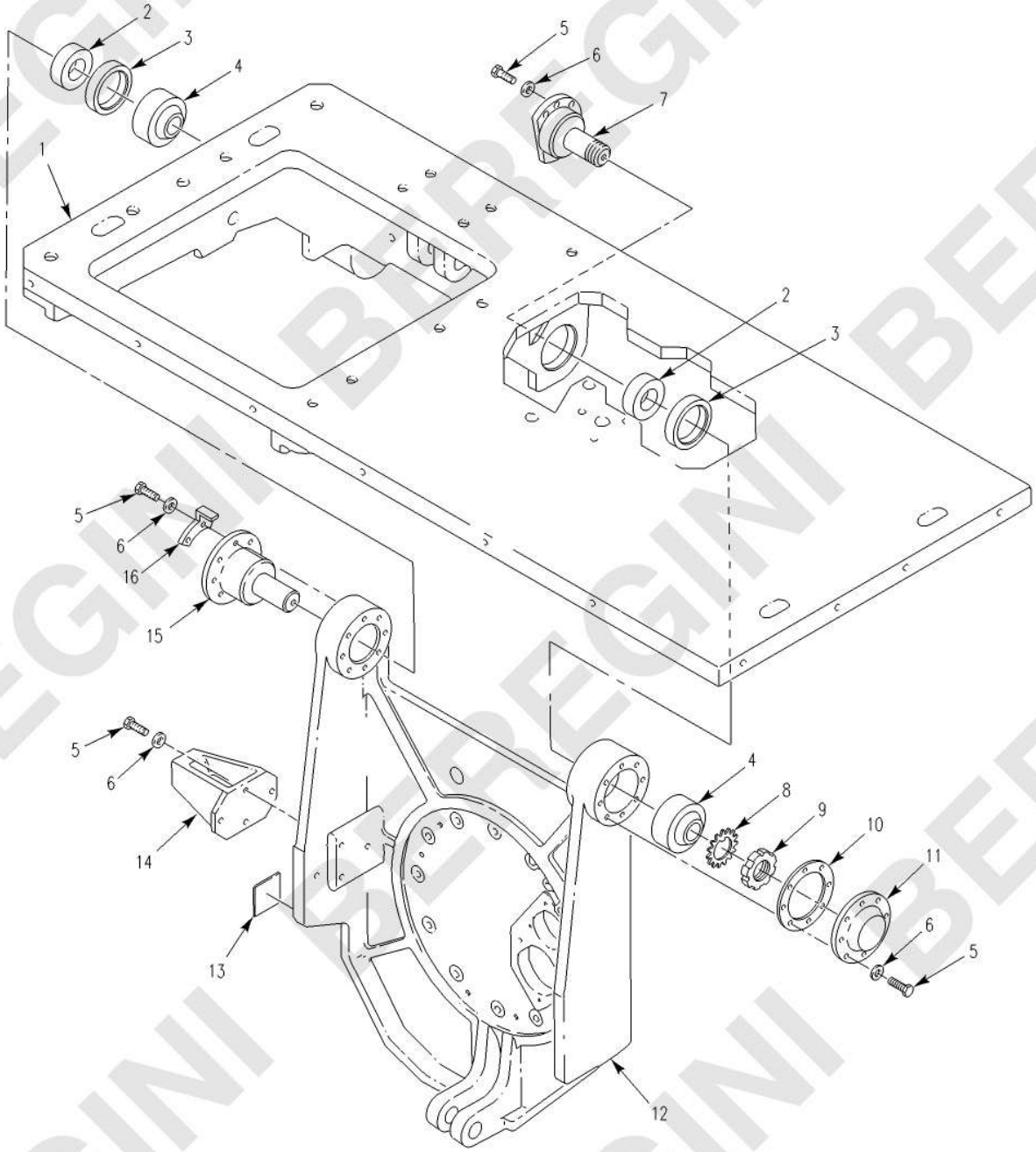

Figure 221. Support Assy, TOW Launcher (FTATAB) - 12986346-1

(1) ITEM NO.	(2) SMR CODE	(3) NSN	(4) CAGEC	(5) PART NUMBER	(6) DESCRIPTION AND USABLE ON CODE (UOC)	(7) QTY
					GROUP FTATAB TOW LAUNCHER SUPPORT ASSY	
					FIGURE 221 Support Assy, TOW Launcher (FTATAB) - 12986346-1	
1	AFFFF		19207	12317054-1	BASEPLATE,TOW LAUNC SEE FIG. 222 FOR BREAKDOWN.....	1
2	PAFZZ	3120-01-113-2315	19207	12294488	BEARING,SLEEVE	2
3	PAFZZ	5330-00-851-7544	19207	12297937	SEAL,PLAIN ENCASED	2
4	PAFZZ	3120-01-153-9601	81343	MS14102-16	BEARING,PLAIN,SELF-	2
5	PAFZZ	5305-00-068-0508	05047	AES01C250750AW9A91	SCREW,CAP,HEXAGON H	25
6	PAFZZ	5310-00-596-1766	80205	MS20002C4	WASHER,RECESSED	25
7	PAFZZ	2530-01-098-7401	19207	12294490	SPINDLE,WHEEL,DRIVI	1
8	PAFZZ	5310-00-226-5977	96906	MS19069A05	WASHER,KEY	1
9	PAFZZ	5310-00-150-3889	96906	MS19067A05	NUT,PLAIN,ROUND	1
10	PAFZZ	5365-01-111-4071	19207	12295586	SHIM	1
11	PAFZZ	3130-01-098-7385	19207	12294204	CAP,PILLOW BLOCK	1
12	PAFZZ	1005-01-334-6999	19207	12276462-1	FACESPLATE,ROTOR	1
13	PAFZZ	9905-01-110-9863	19207	12298656	PLATE,INSTRUCTION	1
14	PAFZZ	1005-01-112-3940	19207	12292075	BRACKET,ARMOR	1
15	PAFZZ	2530-01-098-7402	19207	12294491	SPINDLE,WHEEL,DRIVI	1
16	PAFZZ	5355-01-486-6089	19200	12986345	POINTER,DIAL	1
					END OF FIGURE	

BEREGINI BEREGINI BEREGINI

MAINTAINER

BASEPLATE, TOW LAUNCHER (FTATABA) - 12317054-1

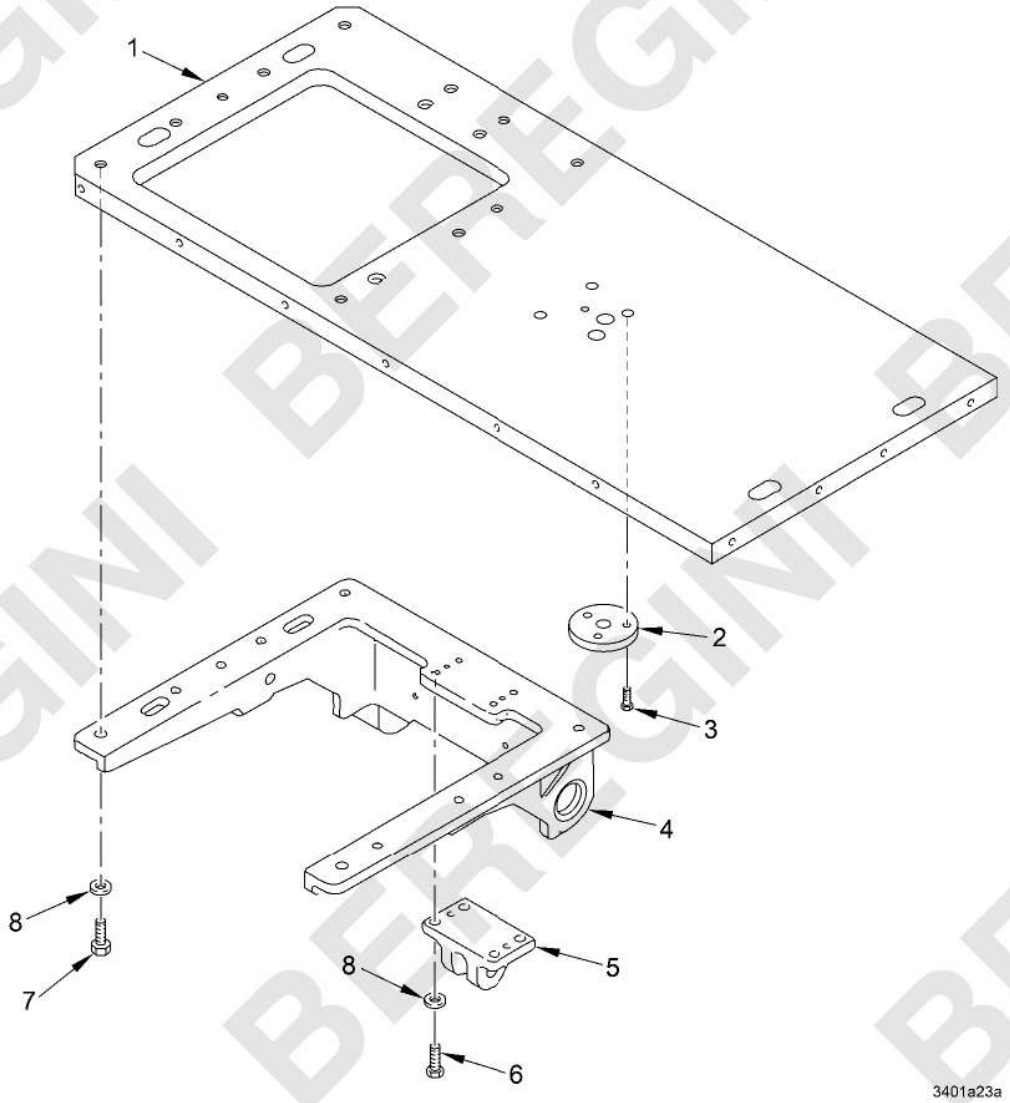

Figure 222. Baseplate, TOW Launcher (FTATABA) - 12317054-1

(1) ITEM NO.	(2) SMR CODE	(3) NSN	(4) CAGEC	(5) PART NUMBER	(6) DESCRIPTION AND USABLE ON CODE (UOC)	(7) QTY
					GROUP FTATABA TOW LAUNCHER BASEPLATE	
					FIGURE 222 Baseplate, TOW Launcher (FTATABA) - 12317054-1	
1	PAFZZ	1005-01-190-3323	19207	12317038	BASEPLATE,TOW LAUNC	1
2	PAFZZ	5365-01-188-8042	19207	12317055	SPACER,PLATE	1
3	PAFZZ	5305-00-958-5246	80205	MS35190-289	SCREW,MACHINE	3
4	PAFZZ	1005-01-333-9252	19207	12317037-2	SUPPORT BRACKET,LAU	1
5	PAFZZ	5340-01-333-6628	19207	12317036-1	LEAF,BUTT HINGE	1
6	PAFZZ	5305-00-071-2071	05047	AES02C500B00AW9A81	SCREW,CAP,HEXAGON H	4
7	PAFZZ	5305-00-071-2068	05047	AES01C500A37AW9A91	SCREW,CAP,HEXAGON H	8
8	PAFZZ	5310-00-866-4417	19207	10910174-5	WASHER,FLAT	12
					END OF FIGURE	

BEREGINI BEREGINI BEREGINI

MAINTAINER

ROTOR ASSY, TOW (FTATC) - 13023196

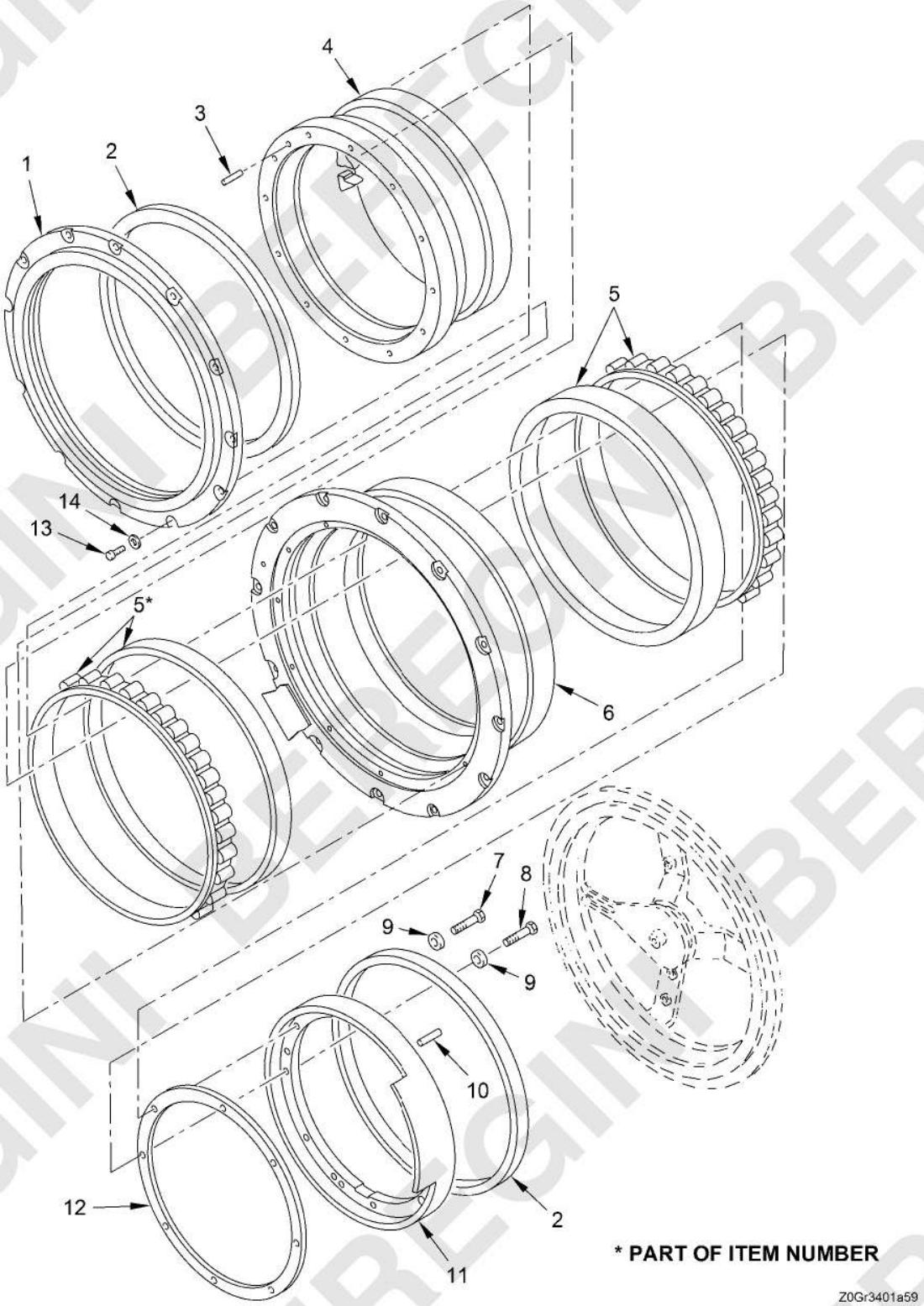

Figure 223. Rotor Assy, TOW (FTATC) - 13023196
(Sheet 1 of 3)

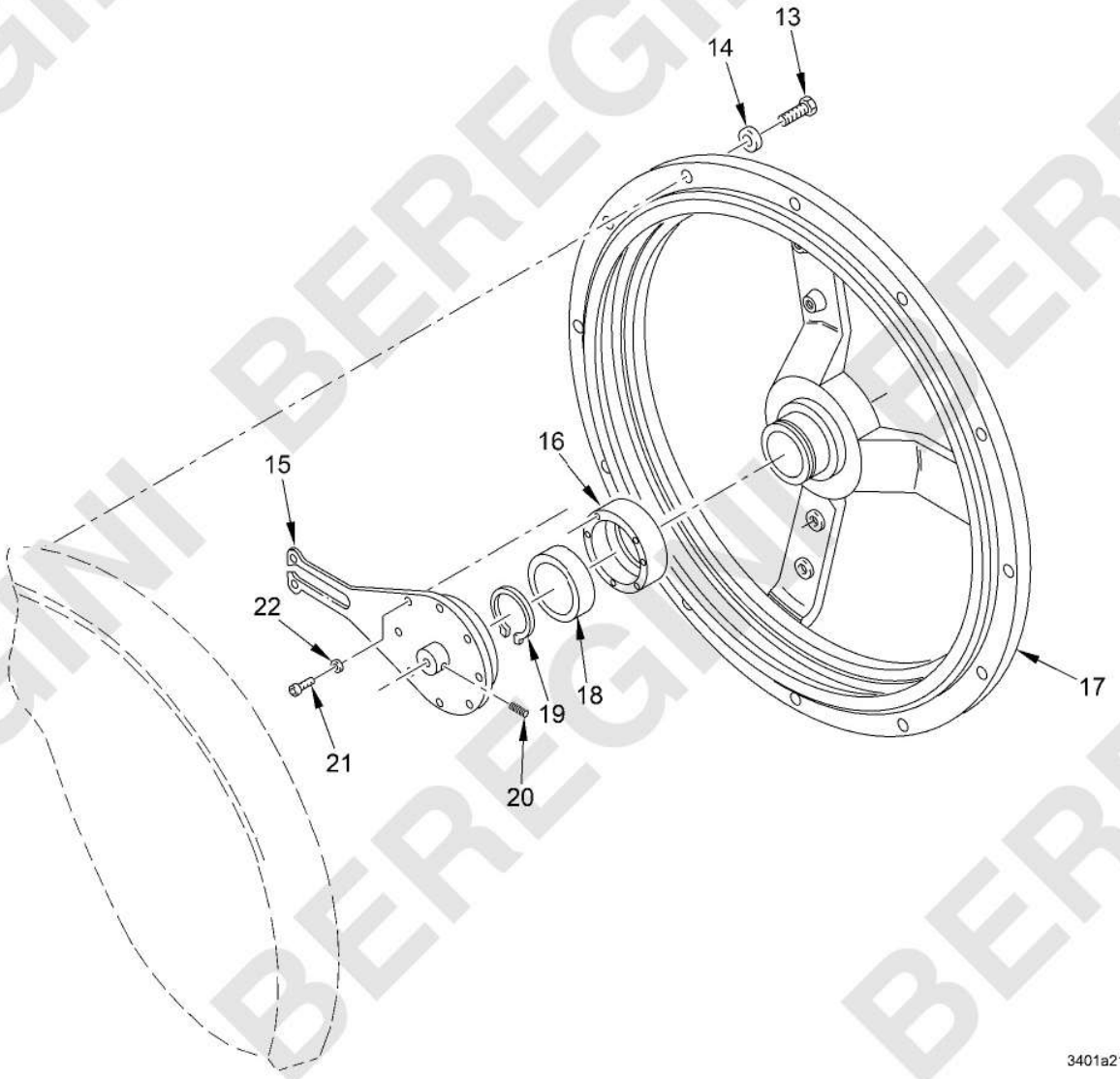

Figure 223. Rotor Assy, TOW (FTATC) - 13023196
(Sheet 2 of 3)

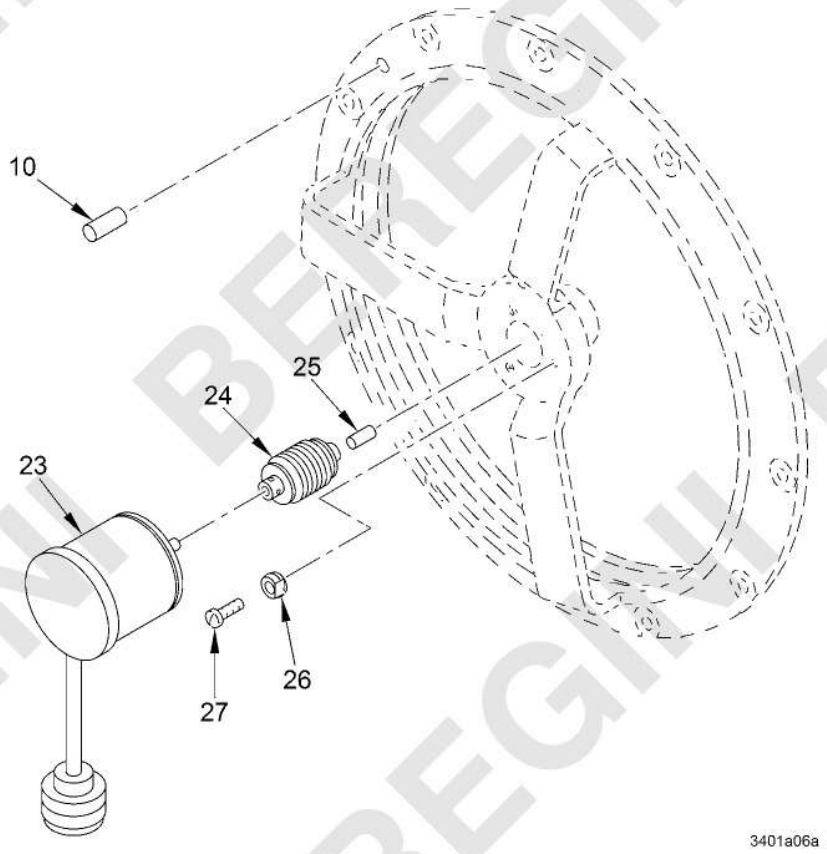

Figure 223. Rotor Assy, TOW (FTATC) - 13023196
(Sheet 3 of 3)

(1) ITEM NO.	(2) SMR CODE	(3) NSN	(4) CAGEC	(5) PART NUMBER	(6) DESCRIPTION AND USABLE ON CODE (UOC)	(7) QTY
					GROUP FTATC TOW ROTOR ASSY	
					FIGURE 223 Rotor Assy, TOW (FTATC) - 13023196	
1	PADZZ	5330-01-111-5859	19207	12294205	RETAINER,OIL SEAL	1
2	PADZZ	5330-01-119-7880	19207	12298088	SEAL,PLAIN	2
3	PADZZ	5315-00-822-0689	96906	MS16555-46	PIN,STRAIGHT,HEADLE	1
4	PADZZ	1005-01-112-6270	19207	12292029	SPINDLE,ROTOR	1
5	PADZZ	3110-01-118-8585	19207	12298085	BEARING,ROLLER,CYLI	2
6	PADZZ	1005-01-110-9898	19207	12276665	RING,TRUNNION	1
7	PADZZ	5305-00-068-0511	05047	AES01C375A25AW9A91	SCREW,CAP,HEXAGON H	7
8	PADZZ	5305-00-782-9489	05047	AES01C375B00AW9A91	SCREW,CAP,HEXAGON H	1
9	PADZZ	5310-00-149-9146	96906	MS20002C6	WASHER,RECESSED	8
10	PADZZ	5315-00-822-9460	80205	MS16562-78	PIN,SPRING	2
11	PADZZ	3110-01-613-2056	02978	30800002	RETAINER,BALL,BEARI	1
12	PADZZ	5365-01-112-1681	19207	12294502	SHIM	2
13	PADZZ	5305-00-068-7837	05047	AEB02C250625WA6AA1	SCREW,CAP,HEXAGON H	24
14	PADZZ	5310-00-596-1766	80205	MS20002C4	WASHER,RECESSED	24
15	PADZZ	5340-01-095-8794	19207	12294201	LEVER,MANUAL CONTRO	1
16	PADZZ	1005-01-114-0066	19207	12294610	RETAINER,BEARING	1
17	PADZZ	5340-01-462-6520	19200	12976035	BRACKET,MOUNTING	1
18	PADZZ	3110-00-107-7575	52676	6007-2RS	BEARING,BALL,ANNULA	1
19	PADZZ	5325-00-803-7316	96906	MS16624-1137	RING,RETAINING	1
20	PAFZZ	5305-00-724-5802	80205	MS51964-29	SETSCREW	1
21	PAFZZ	5305-00-978-9343	80205	NAS1352-10	SCREW,CAP,SOCKET HE	8
22	PADZZ	5310-00-951-4679	96906	MS27183-3	WASHER,FLAT	8
23	PAFZZ	5990-01-462-6961	08815	12976451	RESOLVER,ELECTRICAL	1
24	PAFZZ	3010-01-463-1870	19200	12976614	COUPLING,SHAFT,FLEX	1
25	PAFZZ	3040-00-766-2959	19207	12298086	SHAFT,STRAIGHT	1
26	PAFZZ	1005-01-110-7633	19207	12298079	CLEAT,MOUNT	3
27	PAFZZ	5305-00-177-5601	80205	NAS1352-04-6	SCREW,CAP,SOCKET HE	3
					END OF FIGURE	

BEREGINI BEREGINI BEREGINI

MAINTAINER

M240 GUN MOUNT AND ROTOR (FTAU) - 9380067

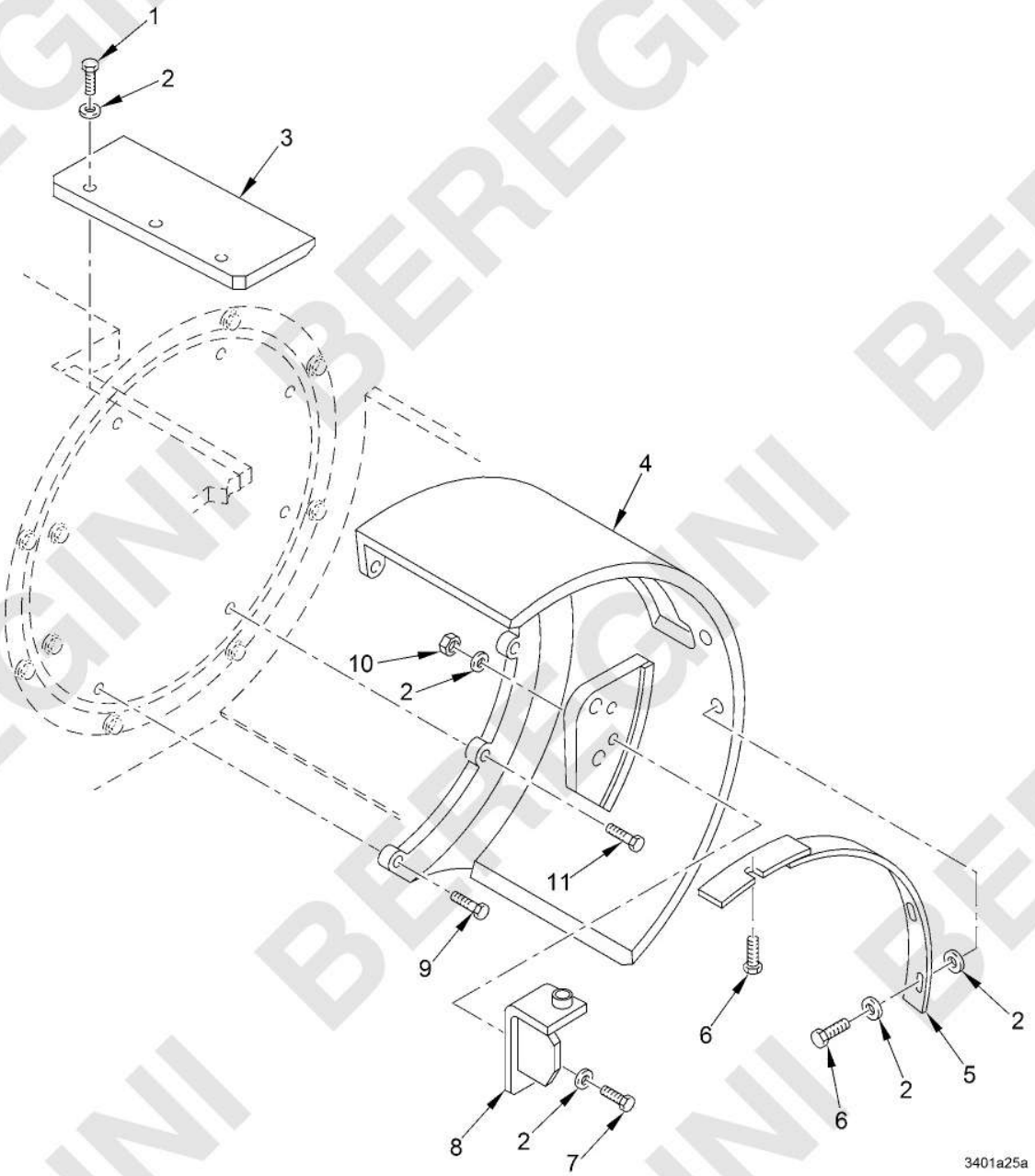

Figure 224. M240 Gun Mount and Rotor (FTAU) - 9380067
(Sheet 1 of 2)

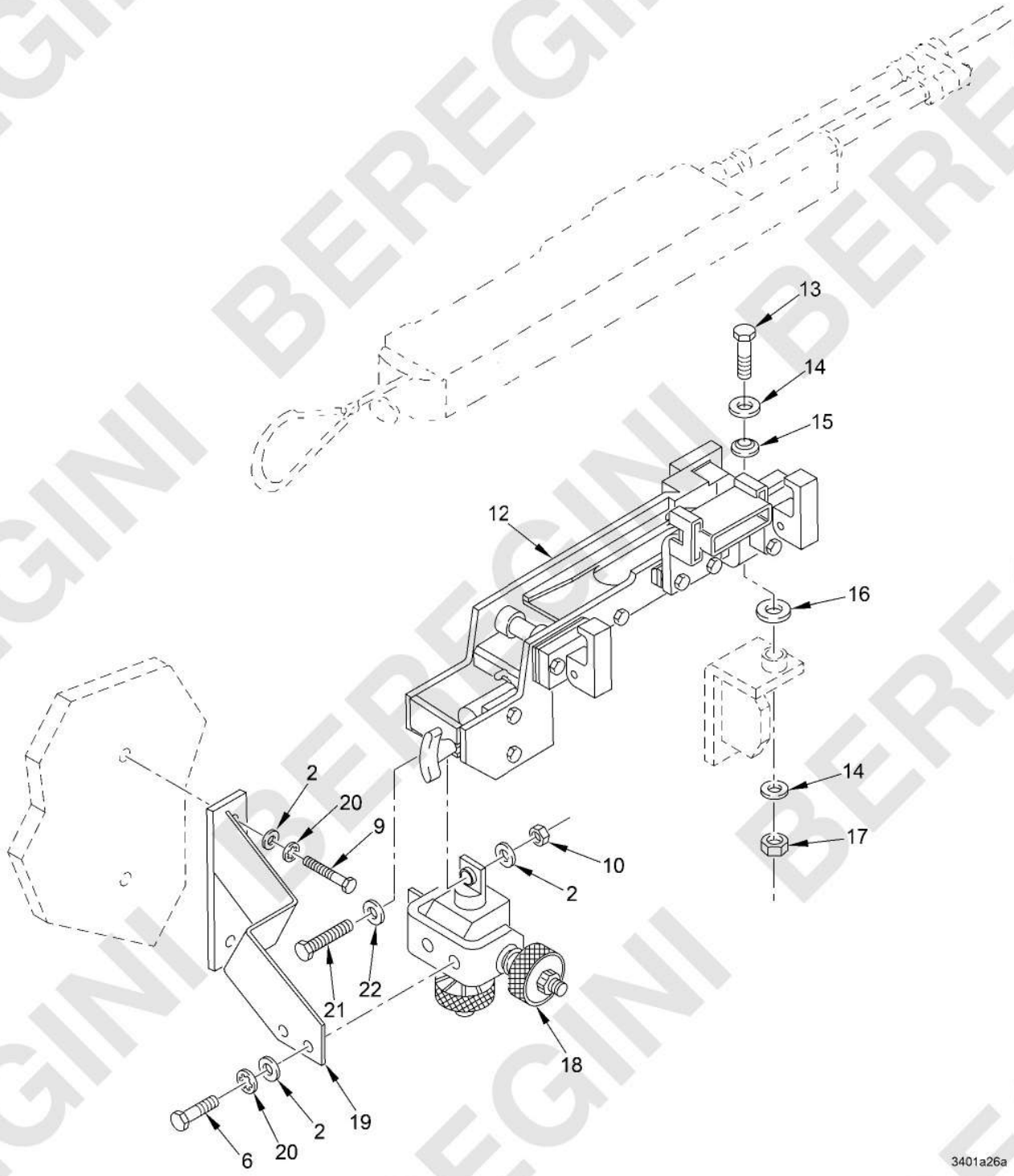

Figure 224. M240 Gun Mount and Rotor (FTAU) - 9380067
(Sheet 2 of 2)

(1) ITEM NO.	(2) SMR CODE	(3) NSN	(4) CAGEC	(5) PART NUMBER	(6) DESCRIPTION AND USABLE ON CODE (UOC)	(7) QTY
					GROUP FTAU M240 GUN MOUNT AND ROTOR	
					FIGURE 224 M240 Gun Mount and Rotor (FTAU) - 9380067	
1	PAFZZ	5305-00-725-2317	05047	AES01C375A50AW9A91	SCREW,CAP,HEXAGON H	3
2	PAFZZ	5310-00-080-6004	96906	MS27183-14	WASHER,FLAT	24
3	PAFZZ	5340-01-112-6277	19207	12294481	PLATE,MENDING	1
4	PAFZZ	4320-01-267-8078	19200	9380055	ROTOR	1
5	PAFZZ	1005-01-111-7787	19207	12294484	GUARD,GUN MOUNT	1
6	PAFZZ	5305-00-068-0510	80204	B1821BH038C100N	SCREW,CAP,HEXAGON H	6
7	PAFZZ	5305-00-821-3869	05047	AES01C375A75AW9A91	SCREW,CAP,HEXAGON H	2
8	PAFZZ	5340-01-267-6167	19200	9380036	BRACKET,MOUNTING	1
9	PAFZZ	5305-00-269-3248	05047	AES01F375C50AW9A91	SCREW,CAP,HEXAGON H	3
10	PAFZZ	5310-00-087-4652	81349	M45913/1-6CG5C	NUT,SELF-LOCKING,HE	3
11	PAFZZ	5305-01-458-1615	80204	B1821BH038F400N	SCREW,CAP,HEXAGON H	4
12	PBFFF	1005-01-267-8103	19200	9380068	MOUNT,GUN SEE FIG. 226 FOR BREAKDOWN	1
13	PAFZZ	5305-00-071-2071	05047	AES02C500B00AW9A81	SCREW,CAP,HEXAGON H	1
14	PAFZZ	5310-00-809-5998	96906	MS27183-18	WASHER,FLAT	2
15	PAFZZ	5310-01-015-3370	81349	M12133/1-11P	WASHER,SPRING TENSI	1
16	PAFZZ	3120-01-267-6155	19200	9380051	BEARING,WASHER,THRU	1
17	PAFZZ	5310-00-225-6993	81349	M45913/1-8CG5C	NUT,SELF-LOCKING,HE	1
18	PAFFF	4933-01-267-8112	19200	9380066	BORESIGHTING EQUIPM SEE FIG. 225 FOR BREAKDOWN	1
19	PAFZZ	5340-01-267-6156	19200	9380097	BRACKET,MOUNTING	1
20	PAFZZ	5310-00-595-7237	80205	MS35333-42	WASHER,LOCK	4
21	PAFZZ	5305-00-688-2111	05047	AES01C375A37AW9A91	SCREW,CAP,HEXAGON H	1
22	PAFZZ	5310-00-809-4061	96906	MS27183-15	WASHER,FLAT	1
					END OF FIGURE	

MAINTAINER

BORESIGHT EQUIPMENT (FTAUA) - 9380066

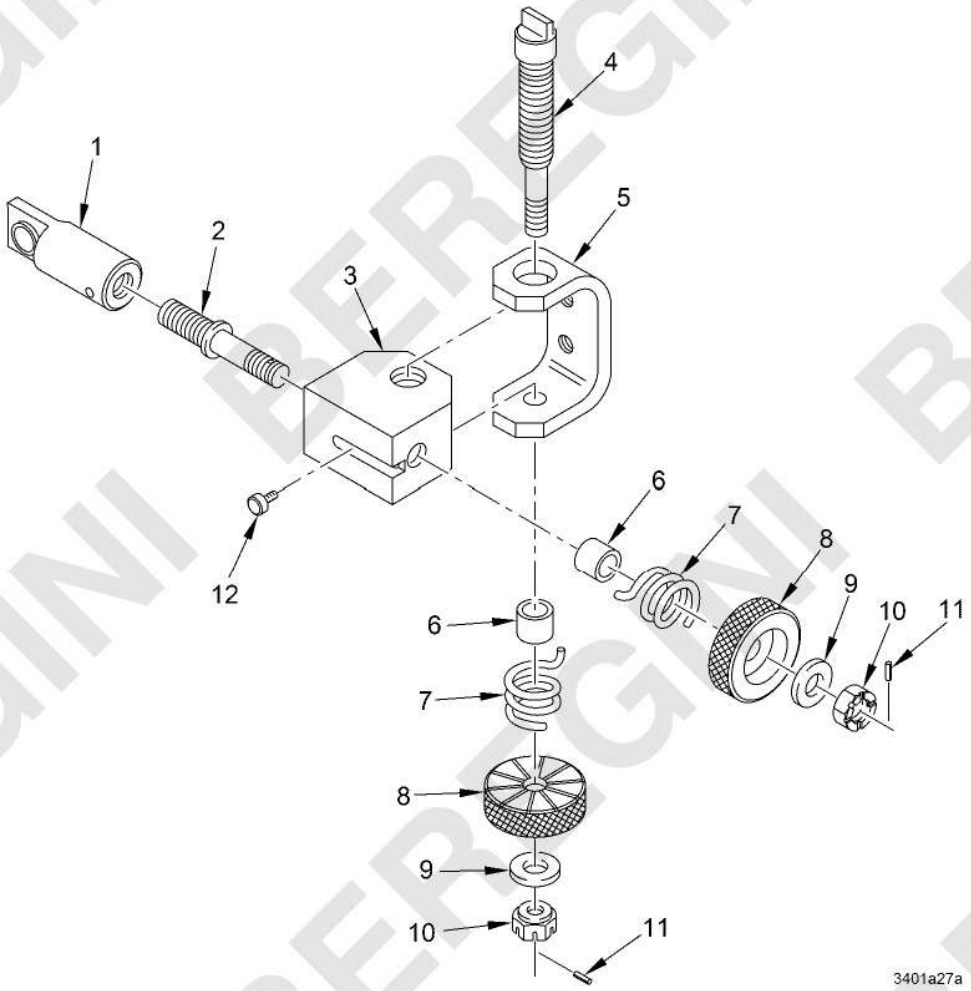

Figure 225. Boresight Equipment (FTAUA) - 9380066

(1) ITEM NO.	(2) SMR CODE	(3) NSN	(4) CAGEC	(5) PART NUMBER	(6) DESCRIPTION AND USABLE ON CODE (UOC)	(7) QTY
					GROUP FTAUA BORESIGHT EQUIPMENT	
					FIGURE 225 Boresight Equipment (FTAUA) - 9380066	
1	PAFZZ	3120-01-267-8096	19200	9380092	BEARING,PLAIN,ROD E	1
2	PAFZZ	3040-01-272-3048	19200	9380091	SHAFT,SHOULDERED	1
3	XAFZZ		19200	9380283	HOUSING,BEARING,UNI	1
4	PAFZZ	3040-01-271-8059	19200	9380088	SHAFT,SHOULDERED	1
5	PAFZZ	5340-01-300-6409	19200	9380282	BRACKET,DOUBLE ANGL	1
6	PAFZZ	5365-01-267-8095	19200	9380070	SPACER,SLEEVE	2
7	PAFZZ	5360-01-342-5224	19200	9380652	SPRING,HELICAL,COMP	2
8	PAFZZ	5355-01-323-8768	19200	9380651	KNOB	2
9	PAFZZ	5310-00-809-5998	96906	MS27183-18	WASHER,FLAT	2
10	PAFZZ	5310-00-268-7313	80205	AN310C8	NUT,PLAIN,CASTELLAT	2
11	PAFZZ	5315-00-753-3892	80205	MS16562-216	PIN,SPRING	2
12	PAFZZ	5305-01-267-8100	19200	9380090	SCREW,CAP,SOCKET HE	1
					END OF FIGURE	

BEREGINI BEREGINI BEREGINI

MAINTAINER

GUN MOUNT ASSEMBLY (FTAUB) - 9380068

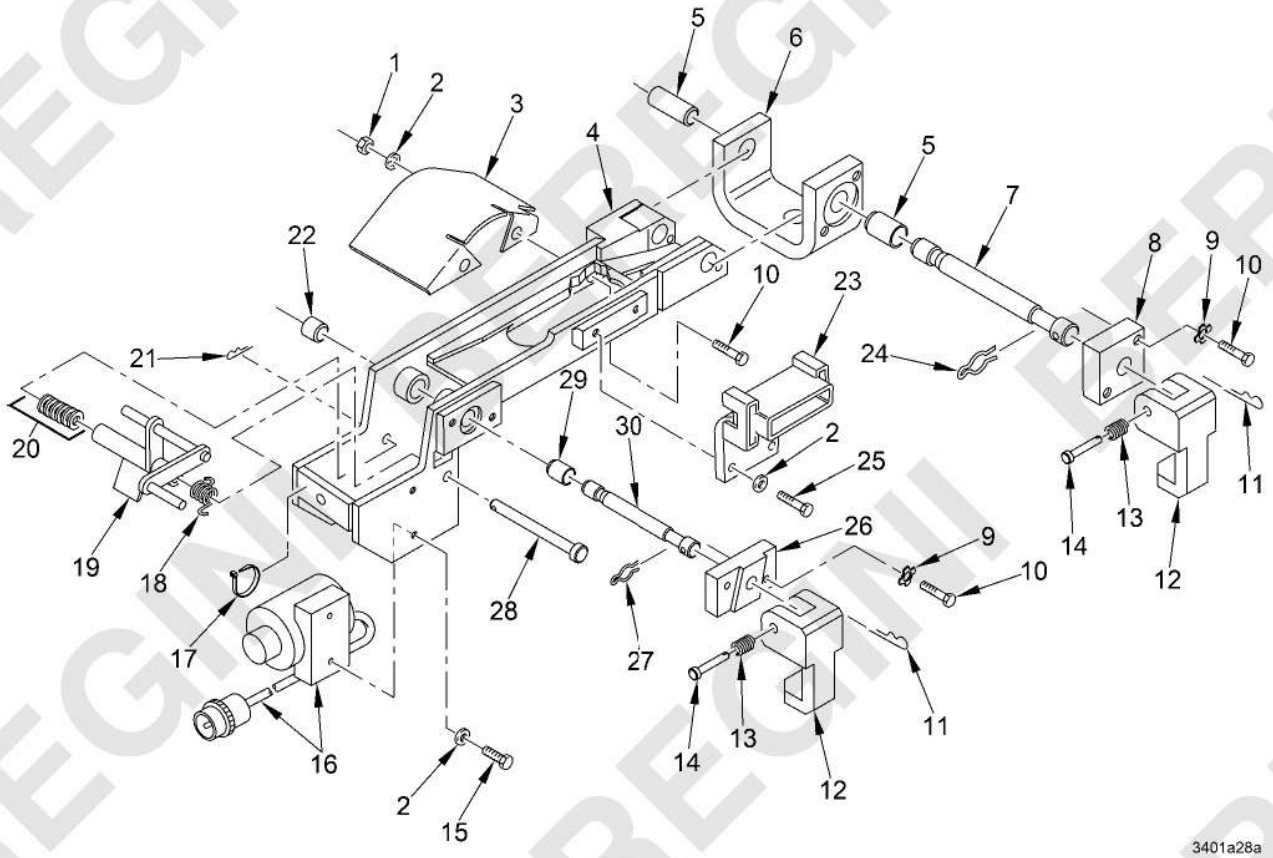

Figure 226. Gun Mount Assembly (FTAUB) - 9380068

(1) ITEM NO.	(2) SMR CODE	(3) NSN	(4) CAGEC	(5) PART NUMBER	(6) DESCRIPTION AND USABLE ON CODE (UOC)	(7) QTY
					GROUP FTAUB GUN MOUNT ASSEMBLY	
					FIGURE 226 Gun Mount Assembly (FTAUB) - 9380068	
1	PAFZZ	5310-00-088-1251	81349	M45913/1-4CG5Z	NUT,SELF-LOCKING,HE	2
2	PAFZZ	5310-00-823-8804	96906	MS27183-9	WASHER,FLAT	6
3	PAFZZ	1005-01-267-8123	19200	9380100	DEFLECTOR,LINK-CART	1
4	XAFZZ		19200	9380038	CRADLE,M240C	1
5	XAFZZ		19200	9380060-1	BUSHING,SLEEVE	2
6	XAFZZ		19200	9380054	BRACKET,DOUBLE ANGL	1
7	PAFZZ	5315-01-267-6150	19200	9380069	PIN,TAPERED,PLAIN	1
8	PAFZZ	3040-01-267-6158	19200	9380044	PLATE,RETAINING,SHA	1
9	PAFZZ	5310-00-655-9669	19207	8756978	WASHER,KEY	4
10	PAFZZ	5305-00-071-2505	80204	B1821BH025C088N	SCREW,CAP,HEXAGON H	6
11	PAFZZ	5315-00-828-8190	80205	MS24665-69	PIN,COTTER	2
12	PAFZZ	5340-01-273-5984	19200	9380271	HANDLE,MANUAL CONTR	2
13	PAFZZ	5360-01-279-6185	19200	9380369	SPRING,HELICAL,TORS	1
14	PAFZZ	5315-00-812-3764	96906	MS20392-2C41	PIN,STRAIGHT,HEADED	2
15	PAFZZ	5305-00-914-3783	80204	B1821BH025C063D	SCREW,CAP,HEXAGON H	2
16	PAFZZ	5945-01-268-3371	19200	9380065	SOLENOID,ELECTRICAL	1
17	PAFZZ	5975-00-727-5153	81343	AS33671-4-9	STRAP,TIEDOWN,ELECT	1
18	PAFZZ	5360-01-268-3372	19200	9380336	SPRING,HELICAL,TORS	2
19	PAFZZ	1005-01-273-5977	19200	9380370	TRIGGER	1
20	PAFZZ	5310-00-140-0558	88044	AN960XC416L	WASHER,FLAT	6
21	PAFZZ	5315-00-187-9370	80205	MS24665-172	PIN,COTTER	1
22	XAFZZ		19200	9380060-4	BUSHING,SLEEVE	1
23	PAFZZ	5340-01-273-5949	19200	9380103	BRACKET,MOUNTING	1
24	PAFZZ	5340-01-276-5089	19200	9380056-1	CLIP,RETAINING	1
25	PAFZZ	5305-01-435-2944	80204	B1821BH025C088D	SCREW,CAP,HEXAGON H	2
26	PAFZZ	3040-01-267-6153	19200	9380039	PLATE,RETAINING,SHA	1
27	PAFZZ	5340-01-275-7167	19200	9380056-2	CLIP,RETAINING	1
28	PAFZZ	5315-00-989-0541	80205	MS20392-3C97	PIN,STRAIGHT,HEADED	1
29	XAFZZ		19200	9380060-5	BUSHING,SLEEVE	1
30	PAFZZ	5315-01-267-6154	19200	9380042	PIN,GROOVED,HEADED	1
					END OF FIGURE	

0227-3/4 blank

BEREGINI BEREGINI BEREGINI

MAINTAINER

25MM WEAPON ROTOR INSTL (FTAV) - 12976621

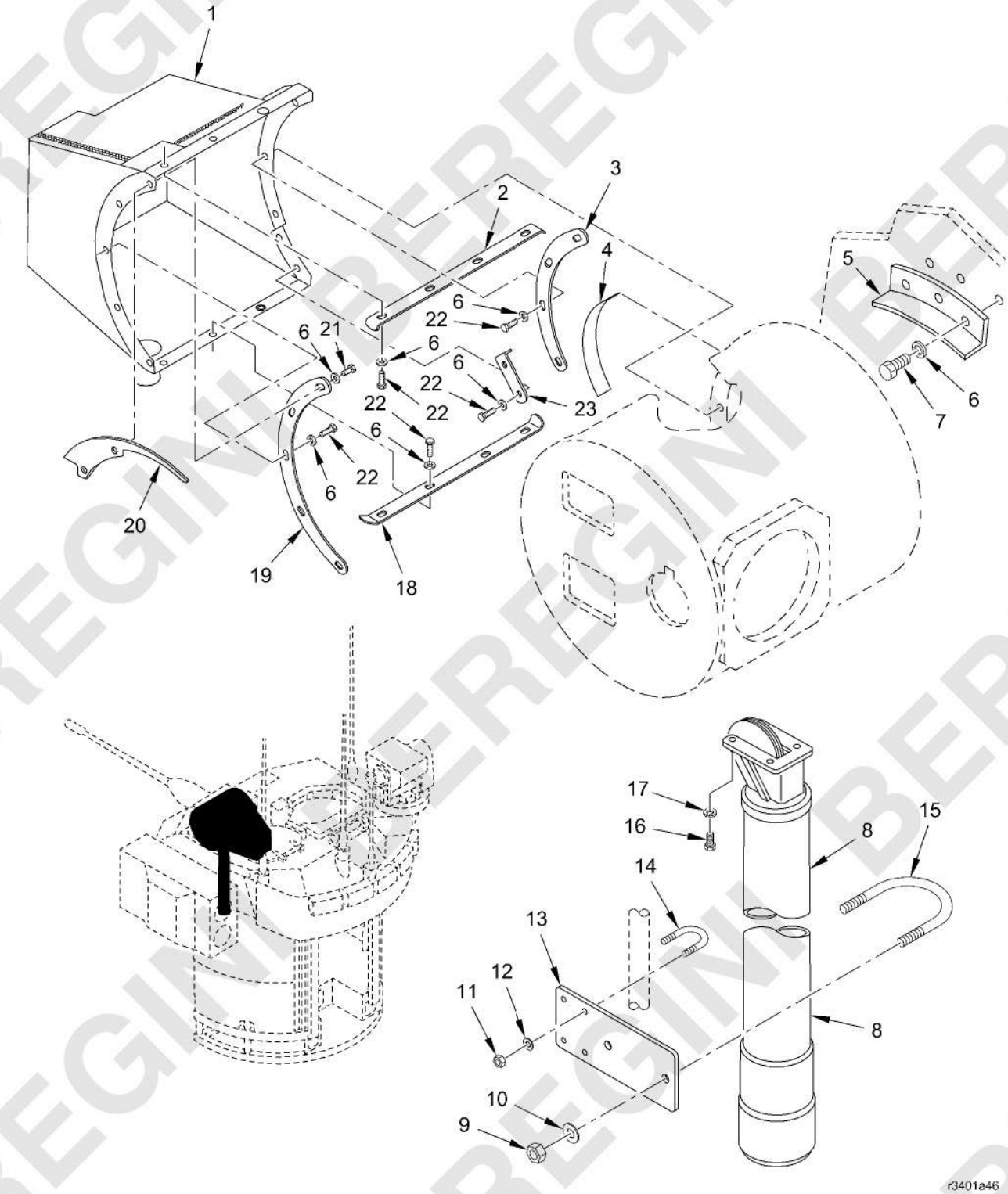

Figure 227. 25MM Weapon Rotor Instl (FTAV) - 12976621
(Sheet 1 of 3)

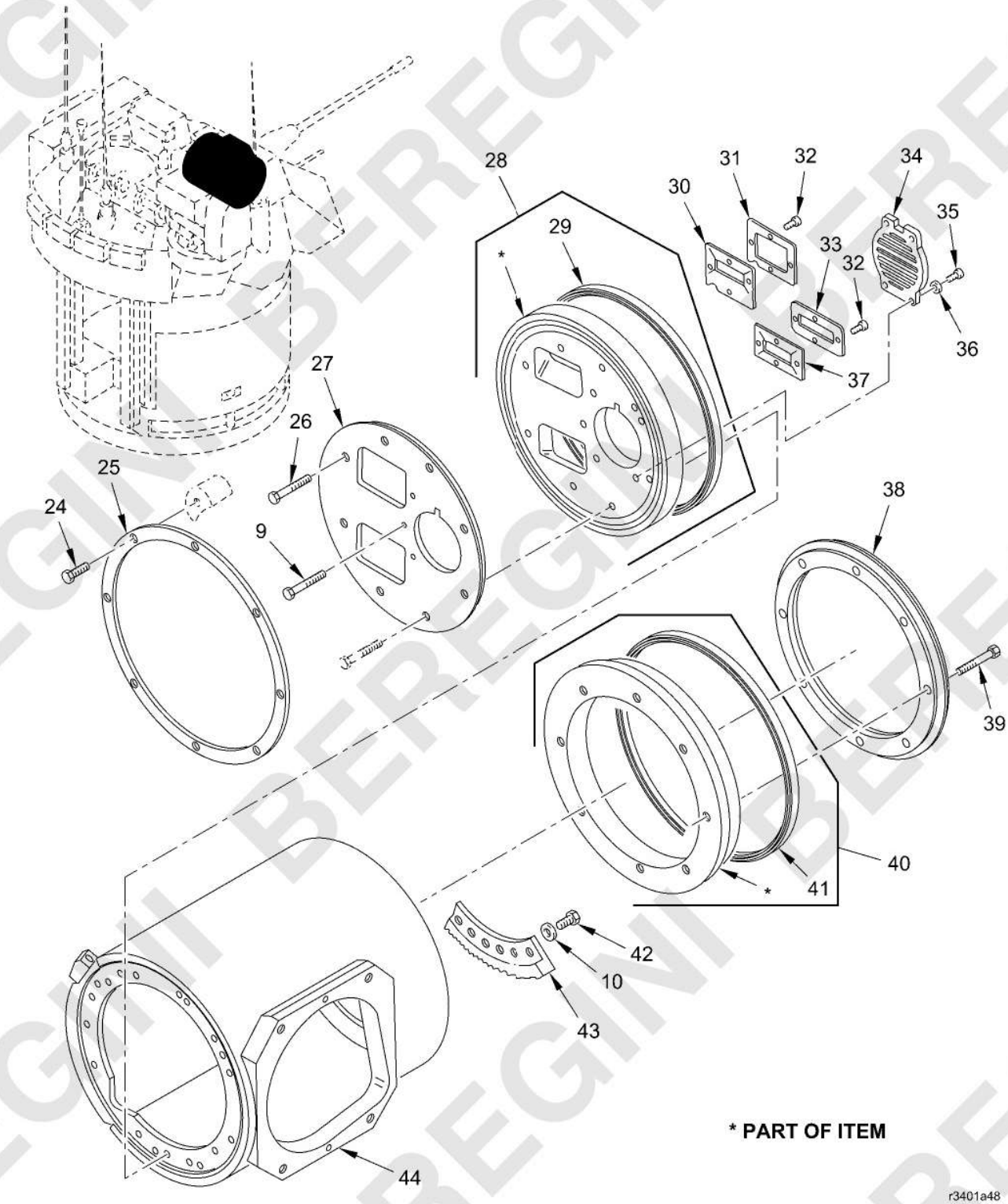

Figure 227. 25MM Weapon Rotor Instl (FTAV) - 12976621
(Sheet 2 of 3)

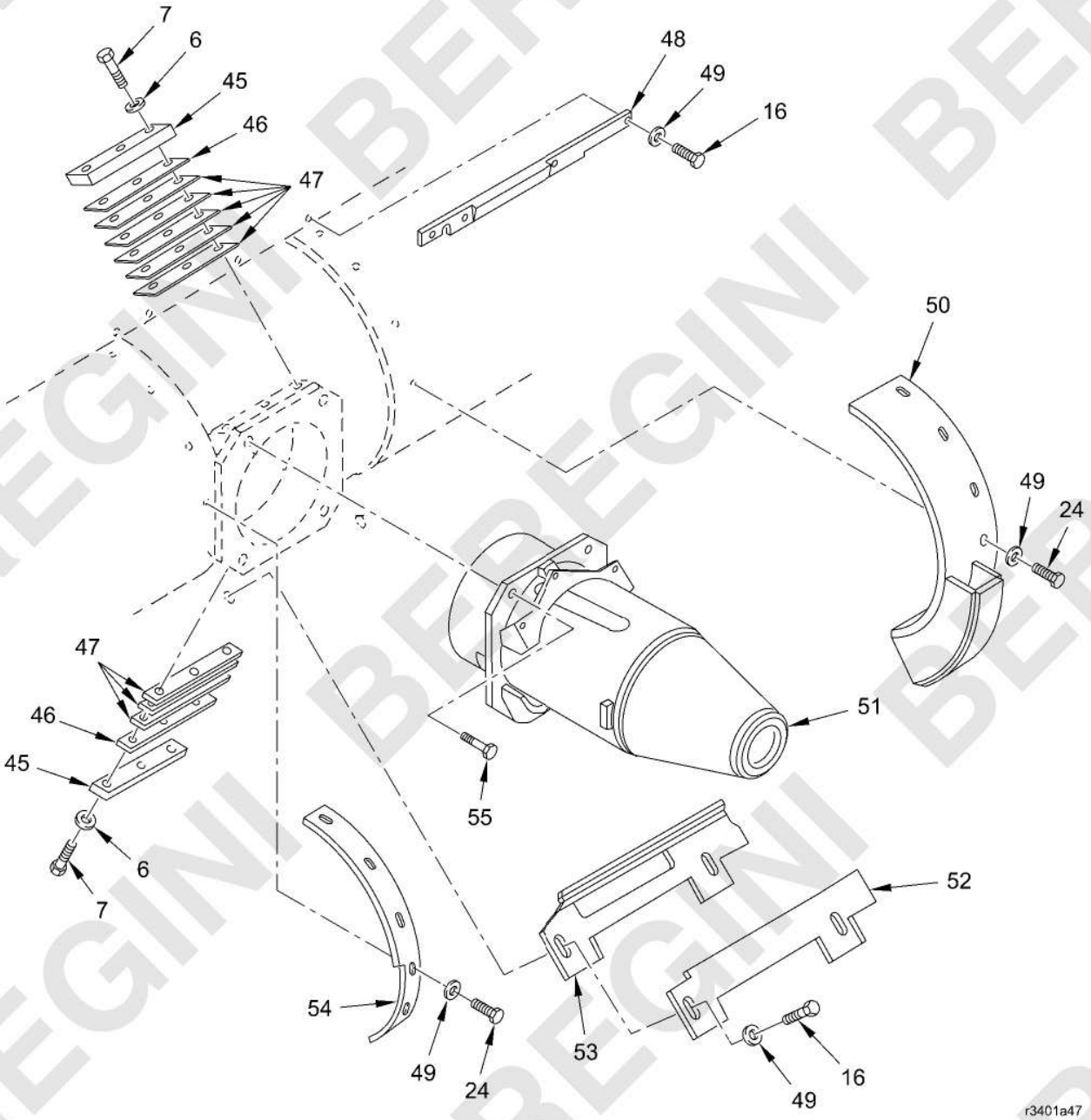

Figure 227. 25MM Weapon Rotor Instl (FTAV) - 12976621
(Sheet 3 of 3)

(1) ITEM NO.	(2) SMR CODE	(3) NSN	(4) CAGEC	(5) PART NUMBER	(6) DESCRIPTION AND USABLE ON CODE (UOC)	(7) QTY
					GROUP FTAV 25MM WEAPON ROTOR INSTL	
					FIGURE 227 25MM Weapon Rotor Instl (FTAV) - 12976621	
1	PAFZZ	1005-01-171-8316	19200	12316966	COVER,GUN SHIELD	1
2	PAFZZ	5340-01-109-4673	19207	12294768-2	COVER,ACCESS	1
3	PAFZZ	1005-01-109-6866	19207	12294770	COVER,RETAINER	1
4	PAFZZ	7690-01-111-5668	19207	12295094	MARKER,IDENTIFICATI	1
5	PAFZZ	5975-01-133-8441	19207	12307412	HANGER,CABLE	1
6	PAFZZ	5310-00-809-4058	96906	MS27183-10	WASHER,FLAT	36
7	PAFZZ	5305-00-068-7837	05047	AEB02C250625WA6AA1	SCREW,CAP,HEXAGON H	9
8	PAFFF	1005-01-101-6249	19200	12294539	EQUILABRATOR,GUN SEE FIG. 229 FOR BREAKDOWN	1
9	PAFZZ	5310-01-530-3969	81349	M45913/1-6FG8Z	NUT,SELF-LOCKING,HE	2
10	PAFZZ	5310-00-877-5972	19200	10910174-3	WASHER,FLAT	8
11	PAFZZ	5310-01-551-9242	81349	M45913/1-4FG8Z	NUT,SELF-LOCKING,HE	4
12	PAFZZ	5310-00-865-9513	19207	10910174-1	WASHER,FLAT	4
13	PAFZZ	5340-01-585-6546	19200	13015096	PLATE,MOUNTING	1
14	PAFZZ	5306-01-252-9103	80205	NAS3104C9-10	BOLT,U	2
15	PAFZZ	5306-01-584-5117	80205	NAS3106C28-22	BOLT,U	1
16	PAFZZ	5305-00-068-0511	05047	AES01C375A25AZ0A86	SCREW,CAP,HEXAGON H	15
17	PAFZZ	5310-00-004-5033	80205	MS35338-46	WASHER,LOCK	4
18	PAFZZ	5340-01-109-4672	19207	12294768-1	COVER,ACCESS	1
19	PAFZZ	1005-01-172-2995	19207	12316779	RETAINER,COVER	1
20	PAFZZ	3040-01-172-3111	19207	12316777	CAM,CONTROL	1
21	PAFZZ	5305-00-225-3843	80204	B1821BH025C100N	SCREW,CAP,HEXAGON H	2
22	PAFZZ	5305-00-071-2506	05047	AES01C250500AW9A91	SCREW,CAP,HEXAGON H	25
23	PAFZZ	1005-01-109-6867	19207	12294769	RETAINER,GUN COMPON	1
24	PAFZZ	5305-00-068-0510	80204	B1821BH038C100N	SCREW,CAP,HEXAGON H	16
25	PAFZZ	1005-01-107-7465	19207	12294450	BEARING,ROTOR	1
26	PAFZZ	5305-00-269-3246	80204	B1821BH038F300N	SCREW,CAP,HEXAGON H	1
27	PAFZZ	1005-01-112-1626	19207	12308400	SHIELD,JOURNAL	1
28	PAFDD	3110-01-235-0225	19200	9379728	BEARING,BALL,THRUST	1
29	PADZZ	3110-01-113-8287	19207	12295143	.BEARING,BALL,ANNULA	2
30	PAFZZ	5330-01-126-7833	19207	12308397	SEAL,LINK CHUTE	1

(1) ITEM NO.	(2) SMR CODE	(3) NSN	(4) CAGEC	(5) PART NUMBER	(6) DESCRIPTION AND USABLE ON CODE (UOC)	(7) QTY
31	PAFZZ	5340-01-126-7837	19207	12308399	PLATE,RETAINING,SEA	1
32	PAFZZ	5305-00-993-1848	80205	MS35207-265	SCREW,MACHINE	1
33	PAFZZ	5340-01-126-7834	19207	12308396	PLATE,RETAINING,SEA	1
34	PAFZZ	4140-01-201-4359	19207	12328935	COVER,ELECTRIC FAN	1
35	PAFZZ	5305-00-688-2111	05047	AES01C375A37AW9A91	SCREW,CAP,HEXAGON H	4
36	PAFZZ	5310-00-080-6004	96906	MS27183-14	WASHER,FLAT	15
37	PAFZZ	5330-01-126-7836	19207	12308398	SEAL,LINK CHUTE	1
38	PAFZZ	1005-01-463-0153	19200	12986266-1	RETAINER,GUN COMPON	1
39	PAFZZ	5305-00-456-6757	80205	MS21262-93	SCREW,CAP,SOCKET HE	8
40	PAFDD	3110-01-458-4358	19200	12986265	BEARING,BALL AND JO	1
41	PADZZ	3110-01-113-8287	19207	12295143	.BEARING,BALL,ANNULA	2
42	PAFZZ	5305-00-269-3237	80204	B1821BH038F113N	SCREW,CAP,HEXAGON H	6
43	PAFZZ	3020-01-111-4037	19207	12276701	GEAR,SPUR	1
44	PAFZZ	4320-01-192-4070	19207	12334285	ROTOR,GUN	1
45	PAFZZ	5340-01-112-3994	19207	12295186	BUMPER,NONMETALLIC	2
46	PAFZZ	5365-01-109-7076	19207	12295187-2	SHIM	2
47	PAFZZ	5365-01-109-7075	19207	12295187-1	SHIM	8
48	PAFZZ	1005-01-192-4068	19207	12334321	SHIELD,GUN	1
49	PAFZZ	5310-00-728-9957	19207	10910174-22	WASHER,FLAT	13
50	PAFZZ	1005-01-111-4837	19207	12294384	SHIELD,CANNON,25MM	1
51	PAFFF	1005-01-266-9576	19200	9380157	MOUNT,GUN SEE FIG. 230 FOR BREAKDOWN	1
52	PAFZZ	1005-01-374-9525	19200	12948134	SHIELD ASSEMBLY,PRO	1
53	PAFZZ	5340-01-384-5392	19200	12948123	BRACKET,MOUNTING	1
54	PAFZZ	1005-01-112-1625	19207	12295652	SHIELD,ROTOR	1
55	PAFZZ	5305-00-726-2550	80204	B1821BH063F175N	SCREW,CAP,HEXAGON H	4
					END OF FIGURE	

MAINTAINER

25MM WEAPON ROTOR INSTL (FTAV) - 12976621

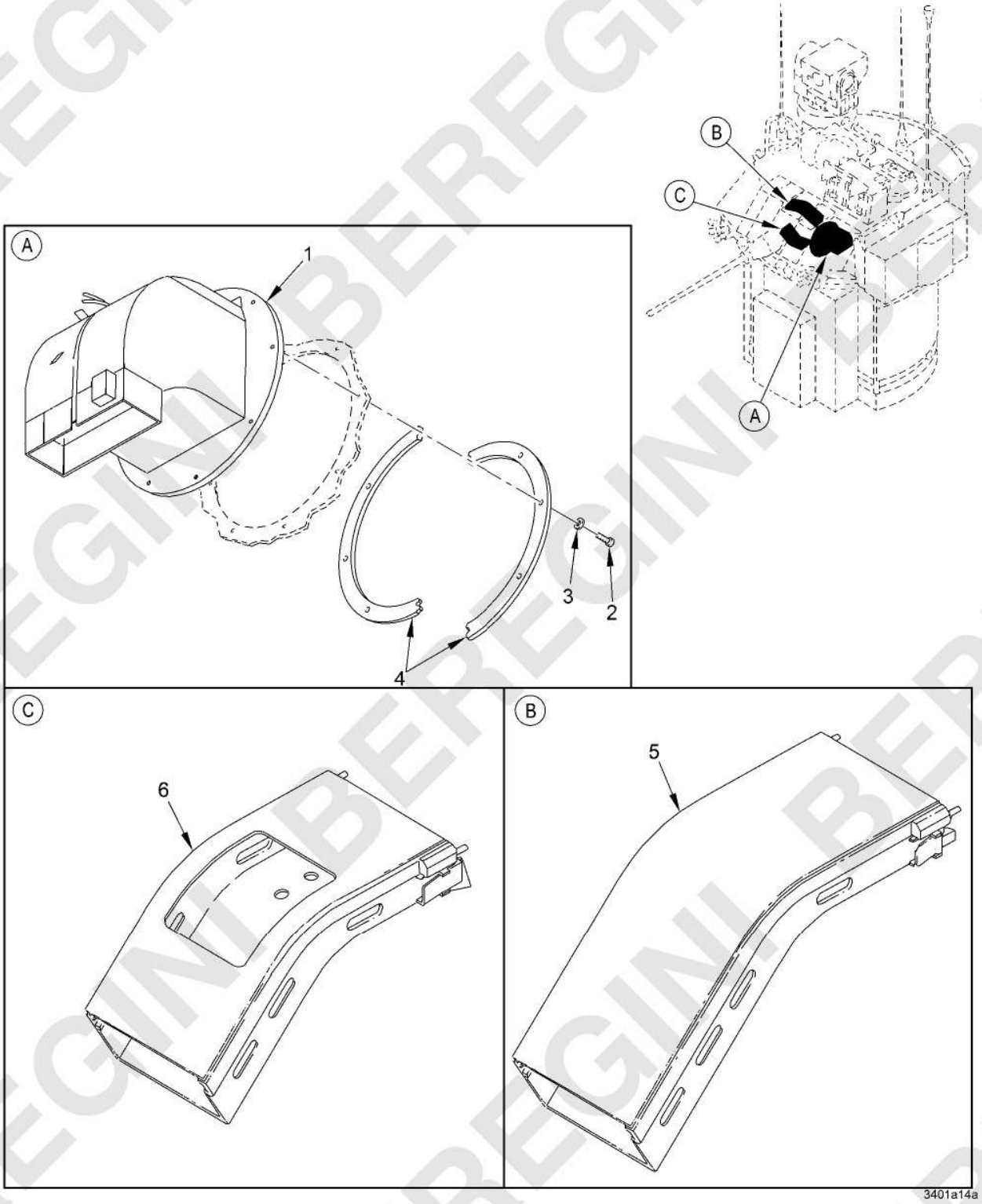

Figure 228. 25MM Weapon Rotor Instl (FTAV) - 12976621
(Sheet 1 of 2)

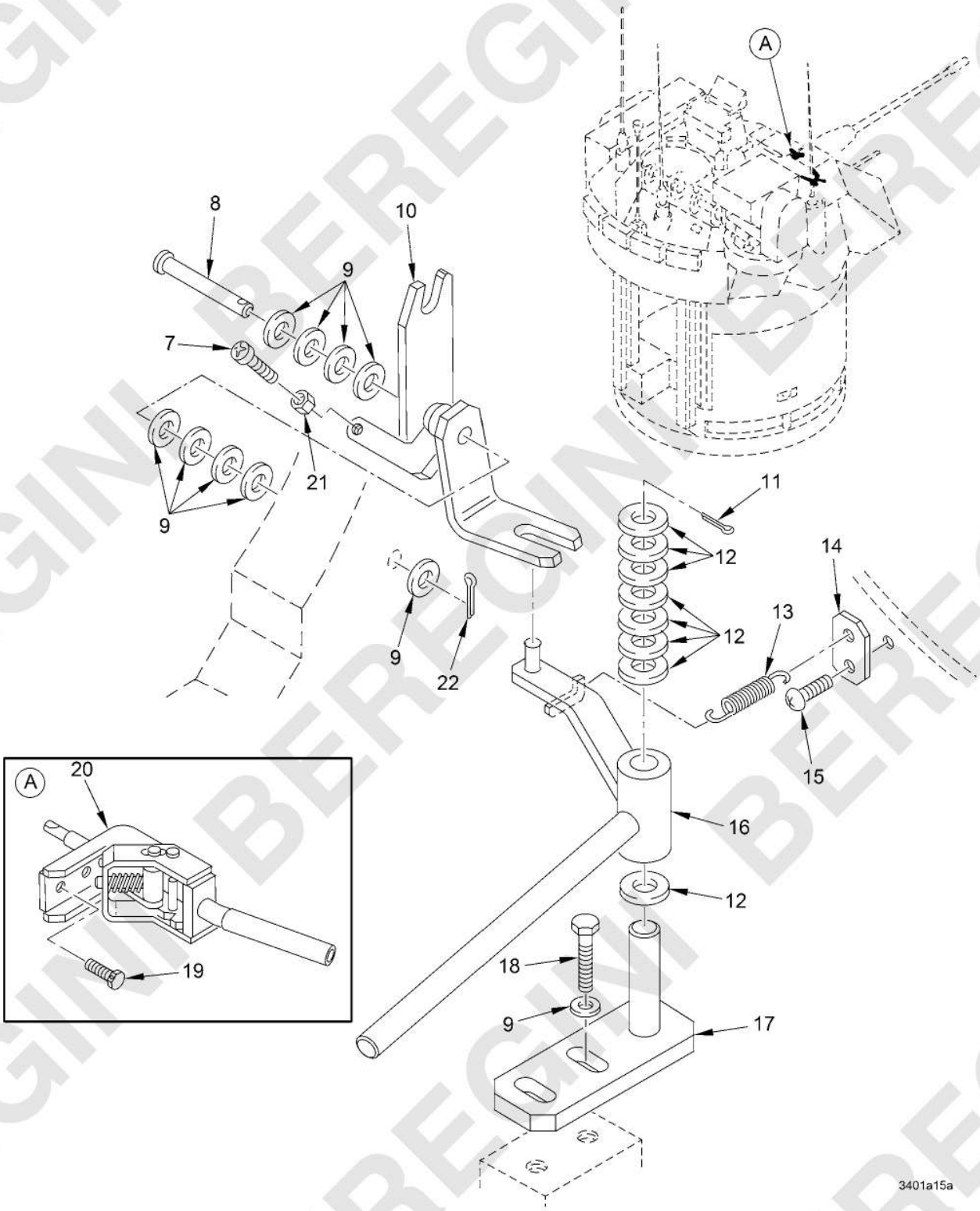

Figure 228. 25MM Weapon Rotor Instl (FTAV) - 12976621
(Sheet 2 of 2)

(1) ITEM NO.	(2) SMR CODE	(3) NSN	(4) CAGEC	(5) PART NUMBER	(6) DESCRIPTION AND USABLE ON CODE (UOC)	(7) QTY
					GROUP FTAV 25MM WEAPON ROTOR INSTL	
					FIGURE 228 25MM Weapon Rotor Instl (FTAV) - 12976621	
1	PAFZZ	1005-01-330-6583	19200	9380506	COVER,PROTECTIVE,DU	1
2	PAFZZ	5305-00-071-2506	05047	AES01C250500AW9A91	SCREW,CAP,HEXAGON H	25
3	PAFZZ	5310-00-809-4058	96906	MS27183-10	WASHER,FLAT	36
4	PAFZZ	5340-01-110-5552	19207	12294343	CLIP,SPRING TENSION	2
5	PAFZZ	1005-01-317-9147	19200	12295636-9	CHUTE,EJECTION	1
6	PAFZZ	1005-01-380-5865	19200	12933420	CHUTE,EJECTION	1
7	PAFZZ	5305-00-984-6212	80205	MS35206-265	SCREW,MACHINE	8
8	PAFZZ	5315-00-957-9417	96906	MS20392-5C97	PIN,STRAIGHT,HEADED	1
9	PAFZZ	5310-00-080-6004	96906	MS27183-14	WASHER,FLAT	15
10	PAFZZ	1005-01-191-8888	19207	12334223	ACTUATOR,BARREL REL	1
11	PAFZZ	5315-00-839-5822	80205	MS24665-353	PIN,COTTER	1
12	PAFZZ	5310-00-809-5998	96906	MS27183-18	WASHER,FLAT	8
13	PAFZZ	5360-01-066-0011	96906	MS24586-C184	SPRING,HELICAL,EXTE	1
14	PAFZZ	5340-01-192-4172	19207	12334221	CLIP,SPRING TENSION	1
15	PAFZZ	5305-00-988-1723	80205	MS35206-279	SCREW,MACHINE	1
16	PAFZZ	5340-01-192-9198	19207	12334224	HANDLE,MANUAL CONTR	1
17	PAFZZ	1005-01-192-1689	19207	12334222	MOUNTING BASE,HANDL	1
18	PAFZZ	5305-00-269-3236	80204	B1821BH038F100N	SCREW,CAP,HEXAGON H	2
19	PAFZZ	5306-00-852-4192	80205	MS51095-332	BOLT,MACHINE	2
20	PAFFF	1005-01-098-6912	19207	12295648	ANTI-ROTATION MECHA SEE FIG. 231 FOR BREAKDOWN	1
21	PAFZZ	5310-00-934-9765	80205	MS35650-304	NUT,PLAIN,HEXAGON	1
22	PAFZZ	5315-00-842-3044	80205	MS24665-283	PIN,COTTER	1
					END OF FIGURE	

MAINTAINER

EQUILIBRATOR, GUN (FTAVA) - 12294539

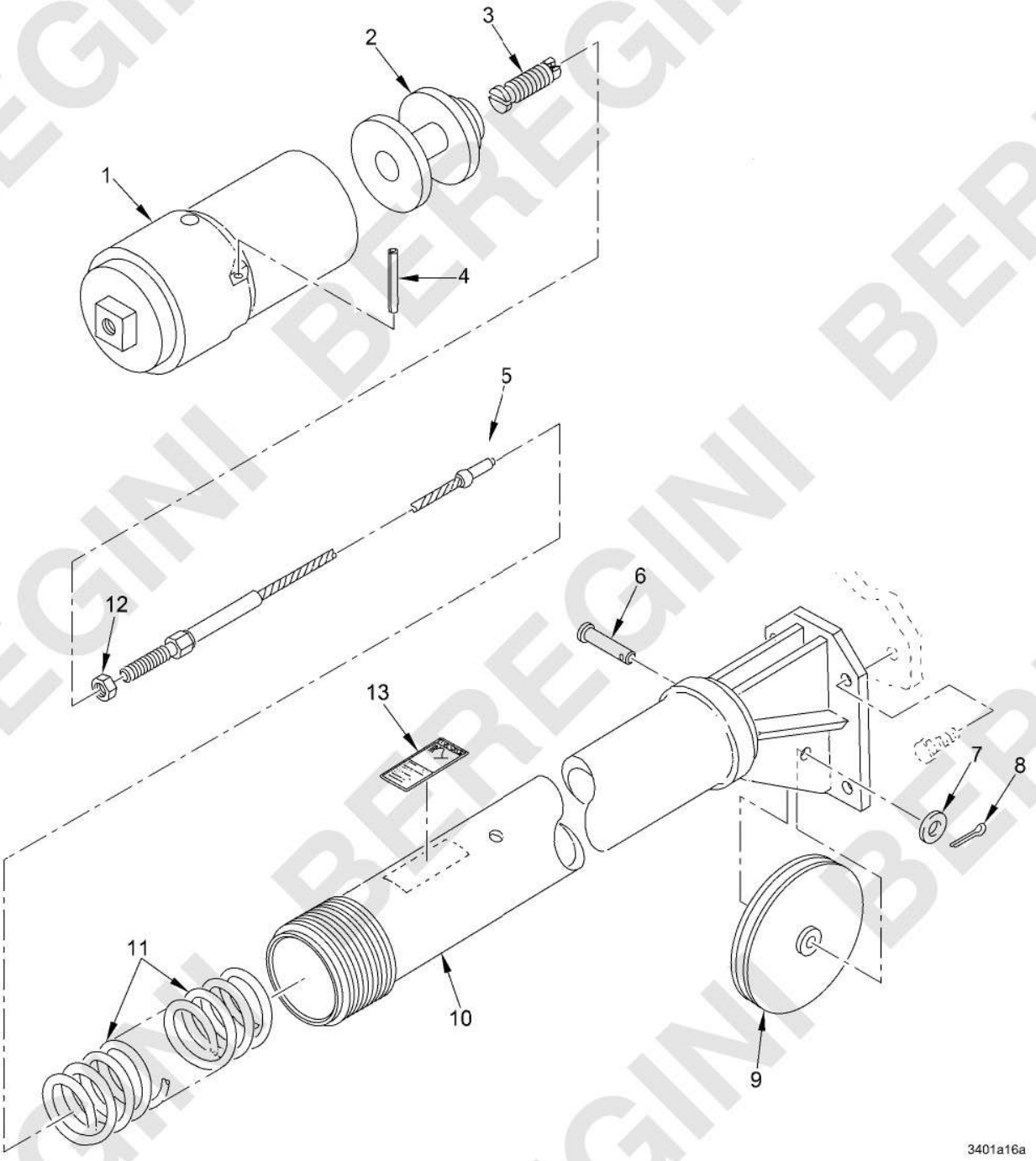

Figure 229. Equilibrator, Gun (FTAVA) - 12294539

(1) ITEM NO.	(2) SMR CODE	(3) NSN	(4) CAGEC	(5) PART NUMBER	(6) DESCRIPTION AND USABLE ON CODE (UOC)	(7) QTY
					GROUP FTAVA GUN EQUILIBRATOR	
					FIGURE 229 Equilibrator, Gun (FTAVA) - 12294539	
1	PAFZZ	1005-01-110-7632	19207	12294511	CAP,EQUILIBRATOR	1
2	PAFZZ	5340-01-112-8270	19207	12294510	RETAINER,HELICAL CO	1
3	PAFZZ	5325-01-111-4968	19207	12294521	INSERT,SCREW THREAD	1
4	PAFZZ	5315-00-836-9628	80205	MS16562-52	PIN,SPRING	1
5	PAFZZ	1640-01-119-5979	19207	12294516	WIRE ROPE ASSEMBLY,	1
6	PAFZZ	5315-00-058-1568	80205	MS20392-5C41	PIN,STRAIGHT,HEADED	1
7	PAFZZ	5310-00-080-6004	96906	MS27183-14	WASHER,FLAT	1
8	PAFZZ	5315-00-842-3044	80205	MS24665-283	PIN,COTTER	1
9	PAFZZ	1640-00-277-1126	96906	MS24566-5B	PULLEY,GROOVE	1
10	XAFZZ		19207	12294509	HOUSING,EQUIL	1
11	PAFZZ	5360-01-112-3982	19207	12295657	SPRING,HELICAL,COMP	1
12	PAFZZ	5310-00-208-6740	88827	NAS509-6	NUT,PLAIN,HEXAGON	1
13	PAFZZ	9905-01-217-7306	19200	9379621	PLATE,INSTRUCTION	1
					END OF FIGURE	

BEREGINI BEREGINI BEREGINI

MAINTAINER

GUN MOUNT, 25MM WEAPON (FTAVB) - 9380157

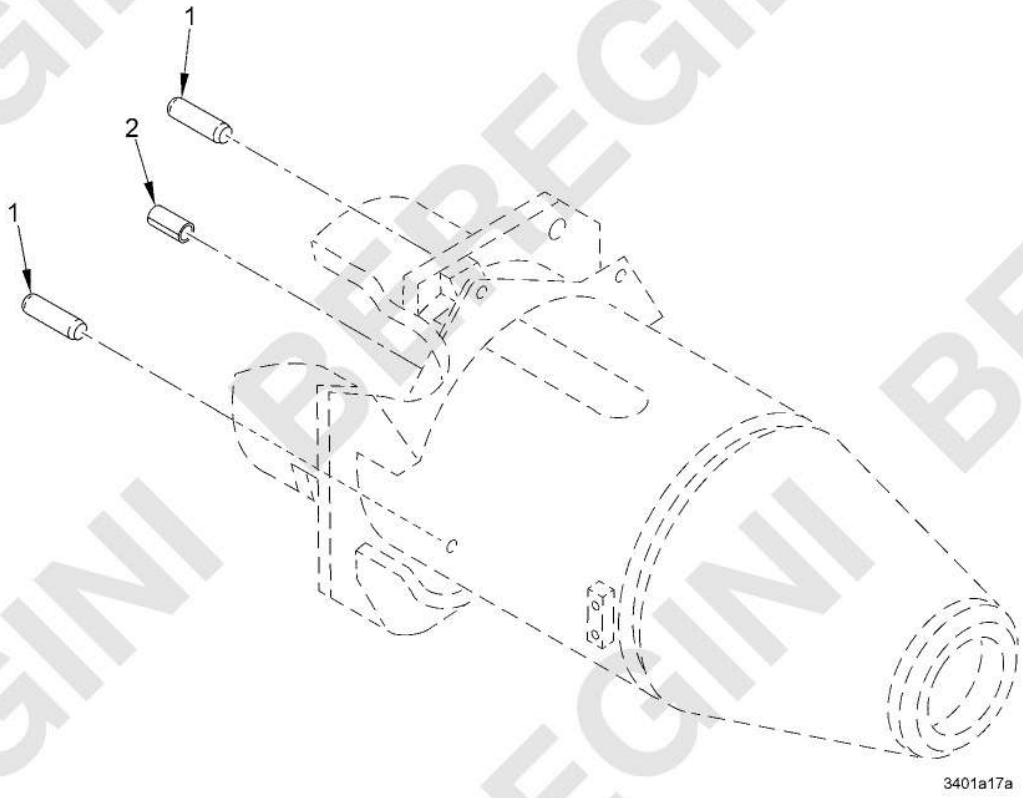

Figure 230. Gun Mount, 25MM Weapon (FTAVB) - 9380157

(1) ITEM NO.	(2) SMR CODE	(3) NSN	(4) CAGEC	(5) PART NUMBER	(6) DESCRIPTION AND USABLE ON CODE (UOC)	(7) QTY
					GROUP FTAVB 25MM WEAPON GUN MOUNT	
					FIGURE 230 Gun Mount, 25MM Weapon (FTAVB) - 9380157	
1	XAFZZ		80205	NAS607-6-8P	PIN,STRAIGHT,HEADLE	2
2	PAFZZ	5315-00-753-3895	80205	MS16562-256	PIN,SPRING	1
					END OF FIGURE	

BEREGINI BEREGINI BEREGINI

MAINTAINER

ANTI-ROTATION MECHANISM (FTAVC) - 12295648

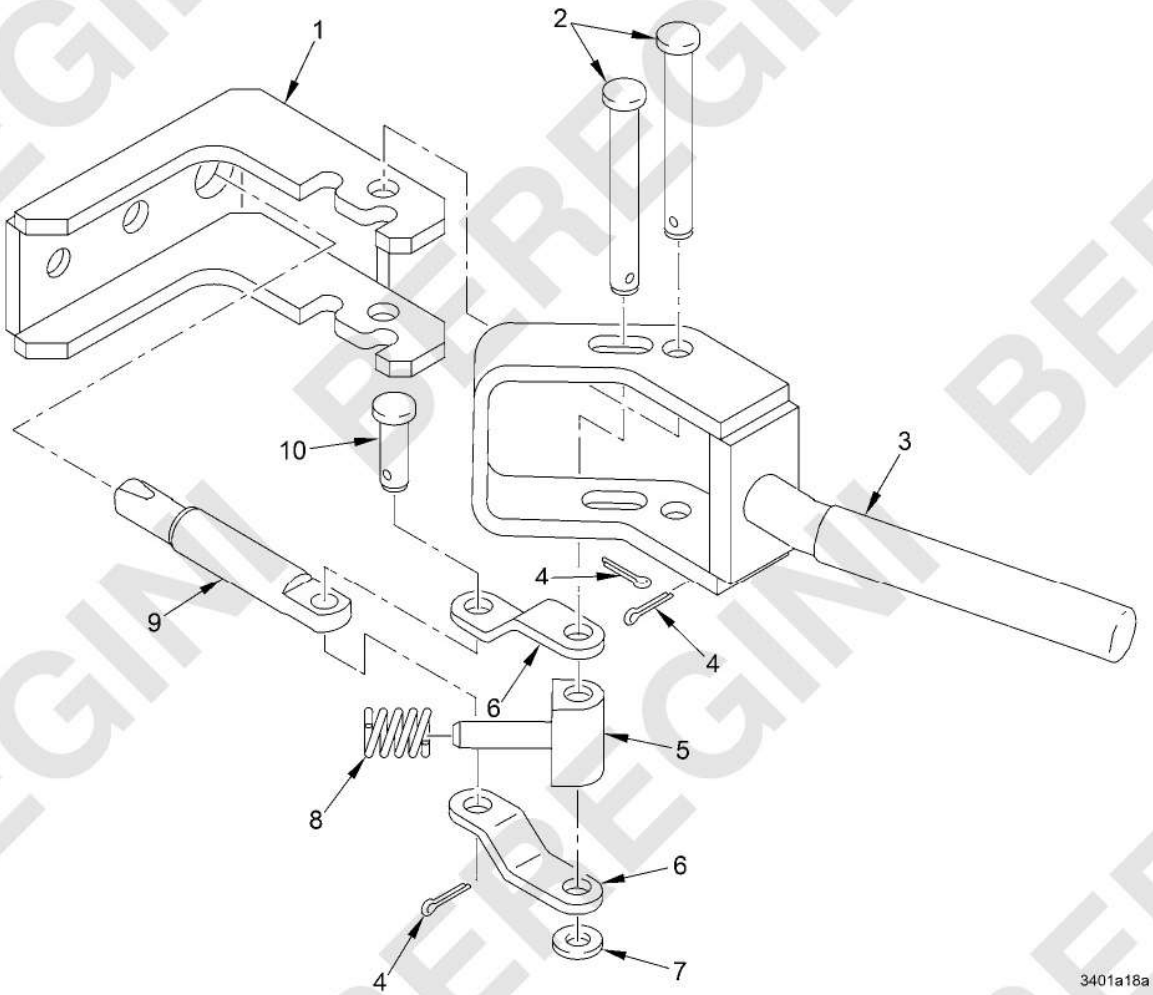

Figure 231. Anti-Rotation Mechanism (FTAVC) - 12295648

(1) ITEM NO.	(2) SMR CODE	(3) NSN	(4) CAGEC	(5) PART NUMBER	(6) DESCRIPTION AND USABLE ON CODE (UOC)	(7) QTY
					GROUP FTAVC ANTI-ROTATION MECHANISM	
					FIGURE 231 Anti-Rotation Mechanism (FTAVC) - 12295648	
1	PAFZZ	5340-01-109-8089	19207	12295643	BRACKET,ANGLE	1
2	PAFZZ	5315-00-081-7019	96906	MS20392-3C71	PIN,STRAIGHT,HEADED	2
3	PAFZZ	5340-01-099-0161	19207	12295644	LEVER,MANUAL CONTRO	1
4	PAFZZ	5315-00-839-2325	80205	MS24665-132	PIN,COTTER	3
5	PAFZZ	5340-01-098-6911	19207	12295647	RETAINER,HELICAL CO	1
6	PAFZZ	3040-01-112-1665	19207	12295646	CONNECTING LINK,RIG	2
7	PAFZZ	5310-00-141-1795	80205	NAS1149F0463P	WASHER,FLAT	2
8	PAFZZ	5360-00-168-4560	18876	10280888-2	SPRING,HELICAL,COMP	1
9	PAFZZ	5315-01-105-8975	19207	12295645	PIN,SHOULDER,HEADLE	1
10	PAFZZ	5315-00-857-2480	96906	MS20392-3C21	PIN,STRAIGHT,HEADED	1
					END OF FIGURE	

BEREGINI BEREGINI BEREGINI

MAINTAINER

TURRET DRIVE INSTL (FTAX) - 12956680

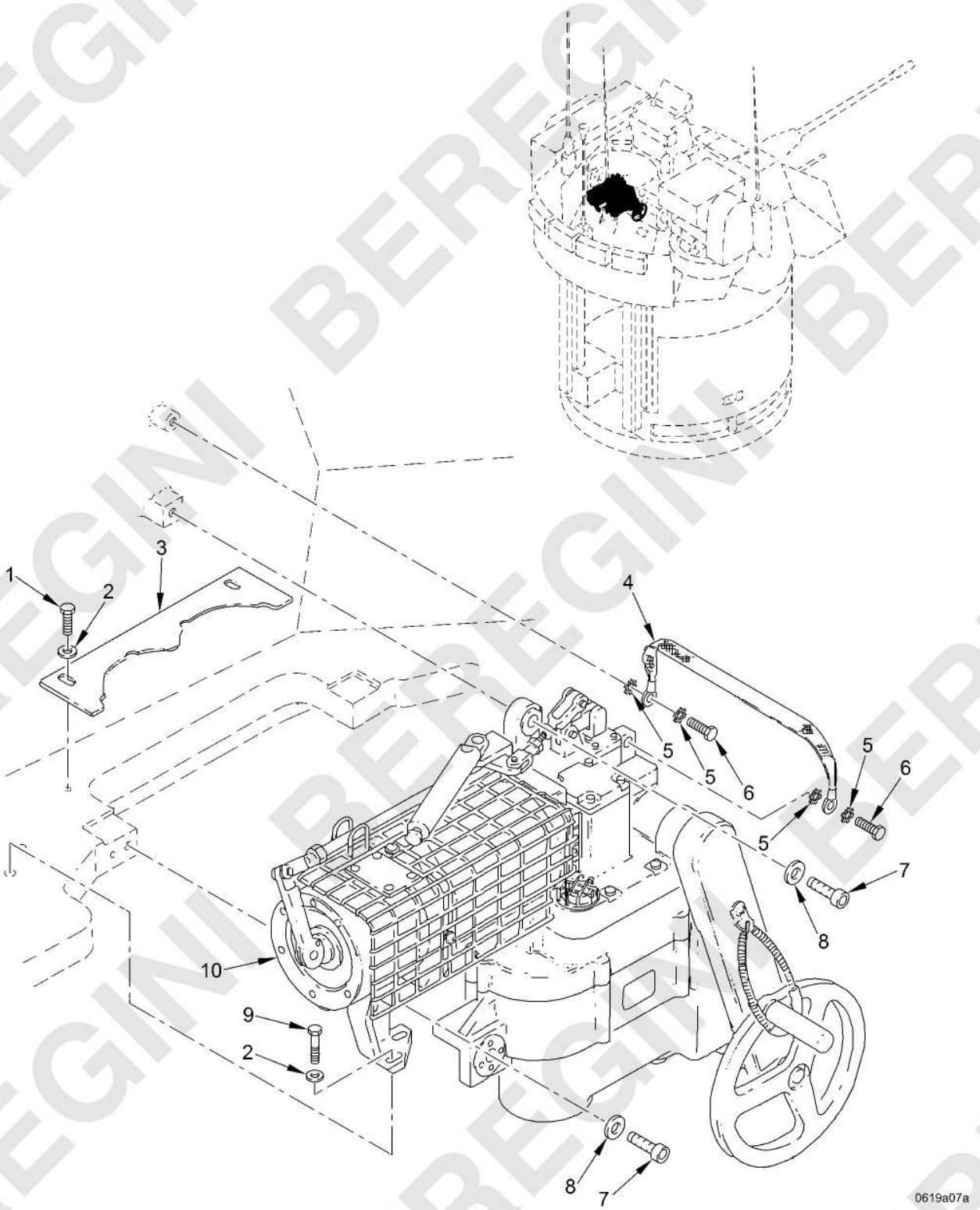

Figure 232. Turret Drive Instl (FTAX) - 12956680
(Sheet 1 of 3)

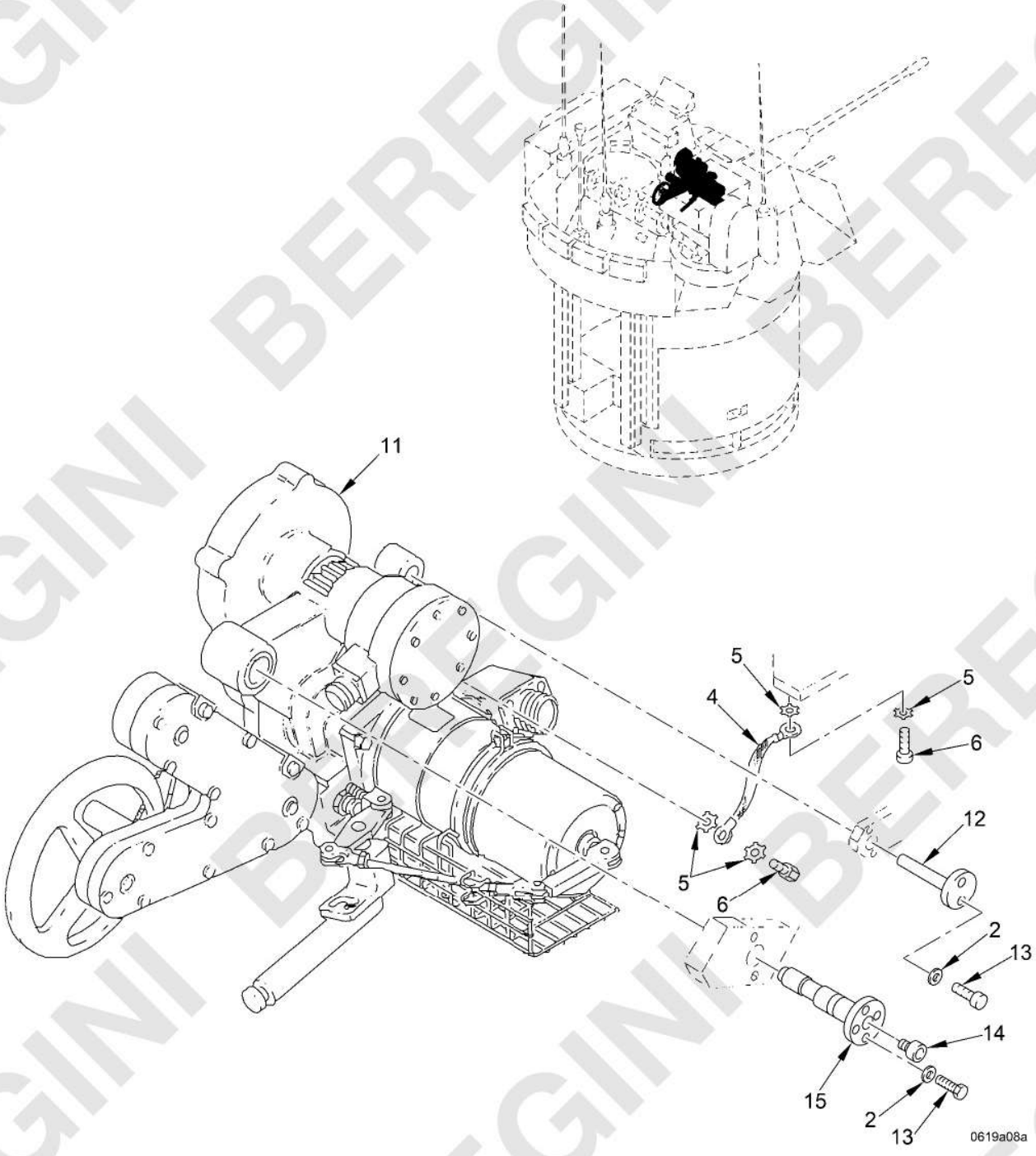

Figure 232. Turret Drive Instl (FTAX) - 12956680
(Sheet 2 of 3)

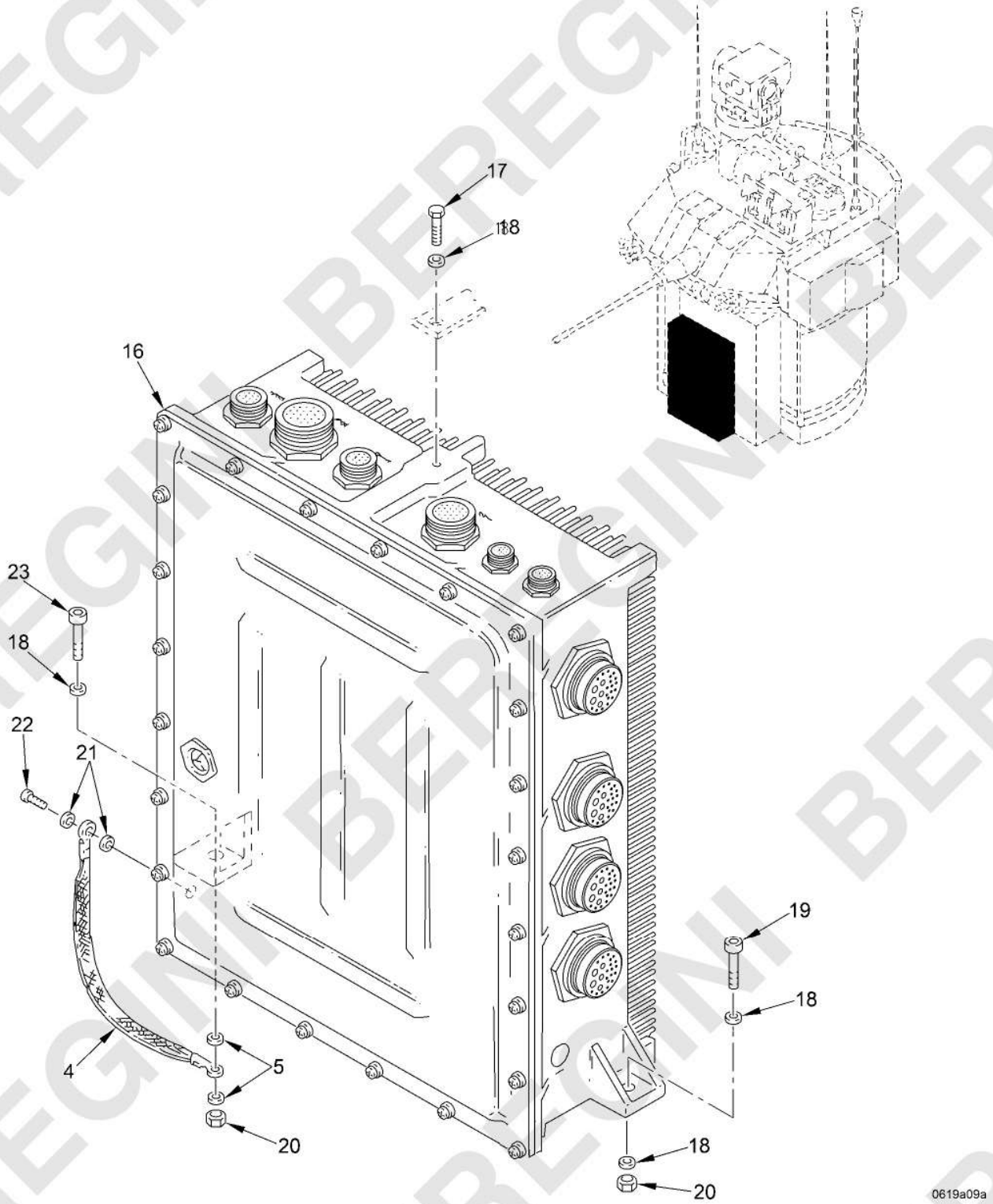

Figure 232. Turret Drive Instl (FTAX) - 12956680
(Sheet 3 of 3)

(1) ITEM NO.	(2) SMR CODE	(3) NSN	(4) CAGEC	(5) PART NUMBER	(6) DESCRIPTION AND USABLE ON CODE (UOC)	(7) QTY
					GROUP FTAX TURRET DRIVE INSTL	
					FIGURE 232 Turret Drive Instl (FTAX) - 12956680	
1	PAFZZ	5305-00-071-2506	05047	AES01C250500AW9A91	SCREW,CAP,HEXAGON H	2
2	PAFZZ	5310-00-809-4058	96906	MS27183-10	WASHER,FLAT	8
3	PAFZZ	1005-01-114-2299	19207	12297697	SHIELD,TRAVERSE MEC	1
4	PAFZZ	5940-01-115-3264	19207	12294837	TERMINAL STRIP,GROU	3
5	PAFZZ	5310-00-061-1258	96906	MS45904-76	WASHER,LOCK	10
6	PAFZZ	5305-00-721-5492	05047	AES01C375625AW9A91	SCREW,CAP,HEXAGON H	4
7	PAFZZ	5305-00-983-7466	96906	MS16997-148	SCREW,CAP,SOCKET HE	3
8	PAFZZ	5310-00-149-9116	80205	MS20002C8	WASHER,RECESSED	3
9	PAFZZ	5305-00-225-3843	80204	B1821BH025C100N	SCREW,CAP,HEXAGON H	2
10	AFFFF		19200	12976126	TRAVERSE DRIVE ASSE SEE FIG. 236 FOR BREAKDOWN	1
11	AFFFF		19207	12317196	ELEVATION DRIVE,GUN SEE FIG. 234 FOR BREAKDOWN	1
12	PAFZZ	5315-01-112-3915	19207	12307373	PIN,STRAIGHT,HEADED	1
13	PAFZZ	5305-00-068-0508	05047	AES01C250750AW9A91	SCREW,CAP,HEXAGON H	4
14	PAFZZ	4730-00-050-4203	81343	AS15001-1	FITTING,LUBRICATION	1
15	PAFZZ	5315-01-115-2061	19207	12307339	PIN,GROOVED,HEADED	1
16	PAFFF	1290-01-491-2653	19200	12976373-2	TURRET DRIVE CONTRO 2A200,TDCU,SEE TM 9-2350-406-23&P...	1
16	PAFFF	1290-01-561-5271	19200	13007370	TURRET DRIVE CONTRO SEE TM 9-2350-406-23&P	1
17	PAFZZ	5305-00-269-3236	80204	B1821BH038F100N	SCREW,CAP,HEXAGON H	1
18	PAFZZ	5310-00-080-6004	96906	MS27183-14	WASHER,FLAT	11
19	PAFZZ	5305-00-983-5334	96906	MS16997-102	SCREW,CAP,SOCKET HE	1
20	PAFZZ	5310-00-087-4652	81349	M45913/1-6CG5C	NUT,SELF-LOCKING,HE	2
21	PAFZZ	5310-00-889-2528	96906	MS45904-68	WASHER,LOCK	2
22	PAFZZ	5305-00-267-8952	80204	B1821BH025F050N	SCREW,CAP,HEXAGON H	1
23	PAFZZ	5305-00-978-9397	96906	MS16997-103	SCREW,CAP,SOCKET HE	1
					END OF FIGURE	

BEREGINI BEREGINI BEREGINI

MAINTAINER

TURRET DRIVE INSTL (FTAX) - 12956680

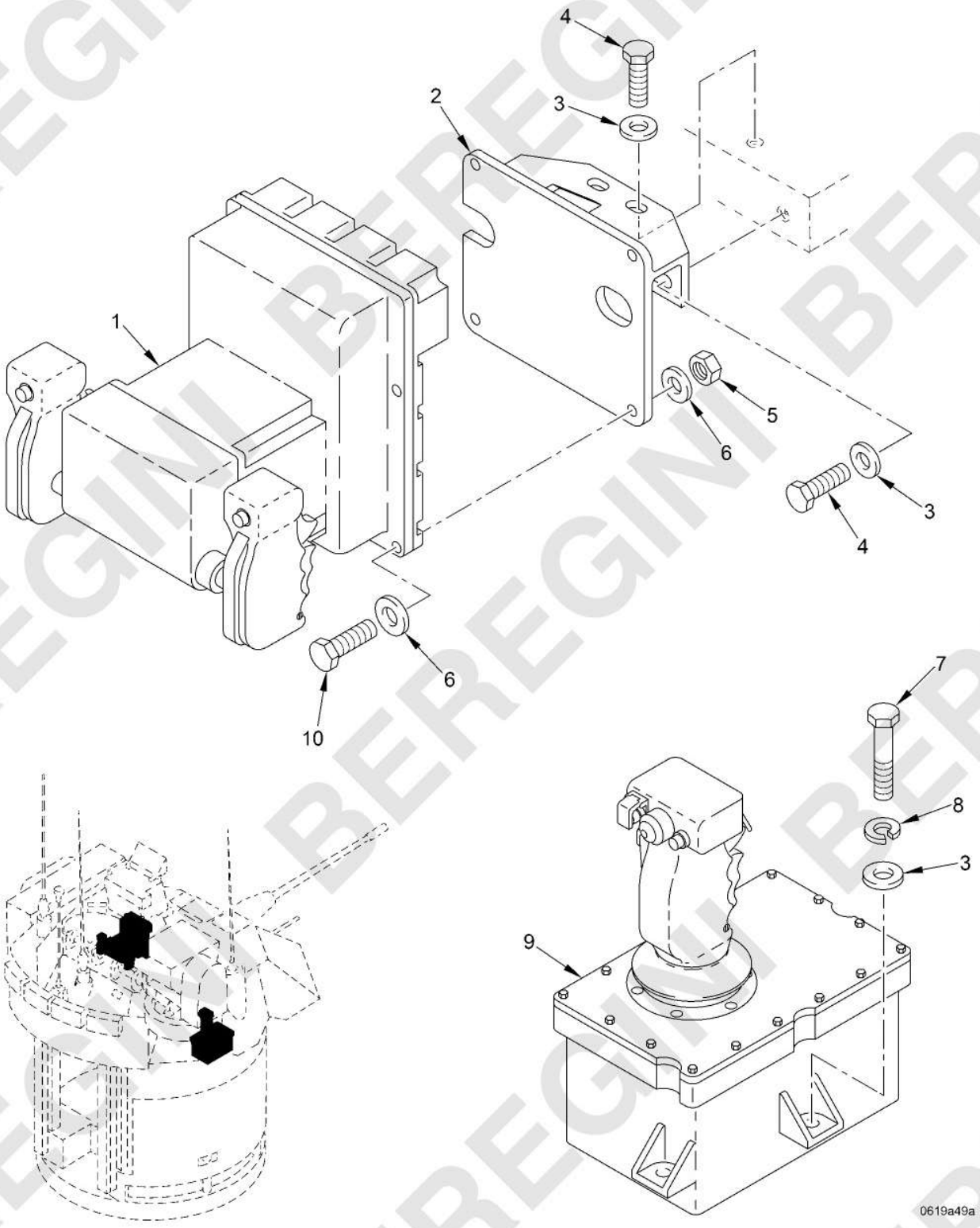

Figure 233. Turret Drive Instl (FTAX) - 12956680
(Sheet 1 of 2)

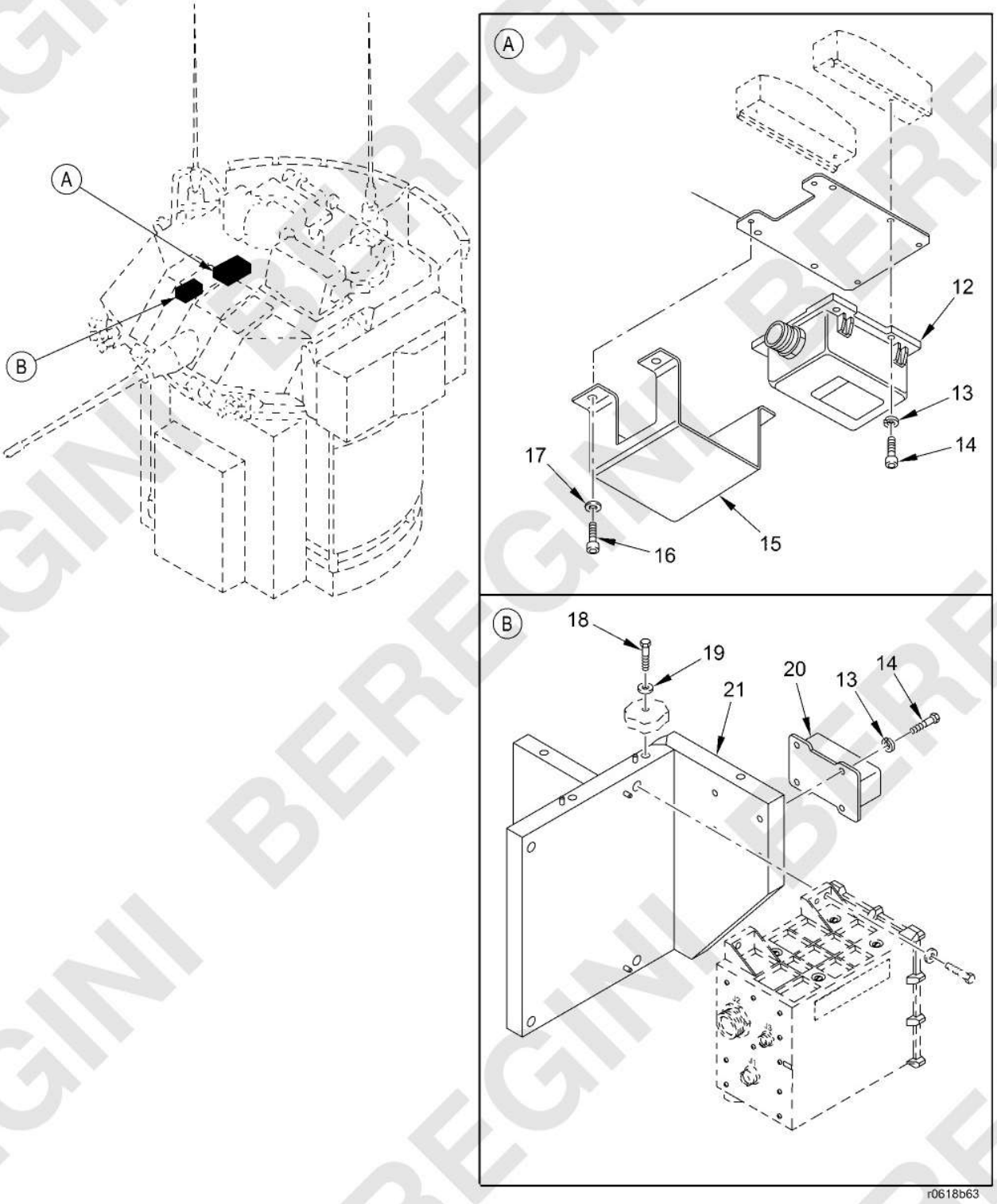

Figure 233. Turret Drive Instl (FTAX) - 12956680
(Sheet 2 of 2)

(1) ITEM NO.	(2) SMR CODE	(3) NSN	(4) CAGEC	(5) PART NUMBER	(6) DESCRIPTION AND USABLE ON CODE (UOC)	(7) QTY
					GROUP FTAX TURRET DRIVE INSTL	
					FIGURE 233 Turret Drive Instl (FTAX) - 12956680	
1	PAFFF	1290-01-465-8591	19200	12976176-20	HANDSTATION,GUNNERS 2A205,OPTIONAL W/12976176-21,SEE TM 9-2350-406-23&P	1
1	PAFFF	1290-01-574-3206	19200	12976176-21	HANDSTATION,GUNNERS 2A205,OPTIONAL W/12976176-20,SEE TM 9-2350-406-23&P	1
2	PAFZZ	5340-01-462-6444	19200	12976346	BRACKET,MOUNTING	1
3	PAFZZ	5310-00-080-6004	96906	MS27183-14	WASHER,FLAT	11
4	PAFZZ	5305-00-068-0510	80204	B1821BH038C100N	SCREW,CAP,HEXAGON H	4
5	PAFZZ	5310-00-984-3806	81349	M45913/1-5CG5C	NUT,SELF-LOCKING,HE	4
6	PAFZZ	5310-00-081-4219	96906	MS27183-12	WASHER,FLAT	8
7	PAFZZ	5305-00-543-2419	05047	AES01C375A12AW9A91	SCREW,CAP,HEXAGON H	3
8	PAFZZ	5310-00-004-5033	80205	MS35338-46	WASHER,LOCK	3
9	PAFHH	1290-01-465-8585	19200	12976221-20	HANDSTATION,COMMAND 2A206,SEE TM 9-2350-406-23&P	1
9	PAFFF	1290-01-574-4863	19200	12976221-21	HANDSTATION,COMMAND 2A206,SEE TM 9-2350-406-23&P	1
10	PAFZZ	5306-00-226-4829	05047	AEB02C312A25AW9A91	BOLT,MACHINE	4
11	PAFZZ	5340-01-141-3850	19207	12293130	PLATE,MOUNTING	1
12	PAFKK	1240-01-621-3930	19200	13020354	GYROSCOPE,RATE INTERCHANGEABLE W/ 12292348	1
12	PAFDD	1005-01-095-5205	19207	12292348	GYRO ASSEMBLY,GUN INTERCHANGEABLE W/ 13020354	1
13	PAFZZ	5310-00-582-5965	80205	MS35338-44	WASHER,LOCK	8
14	PAFZZ	5305-00-978-9380	96906	MS16997-61	SCREW,CAP,SOCKET HE	8
15	PAFZZ	5340-01-144-3235	19207	12293129	COVER,ACCESS USED WITH 12292348	1
16	PAFZZ	5305-00-978-9378	96906	MS16997-58	SCREW,CAP,SOCKET HE USED WITH 12292348	4
17	PAFZZ	5310-00-865-9513	19207	10910174-1	WASHER,FLAT USED WITH 12292348	4
18	PAFZZ	5305-00-782-9489	05047	AES01C375B00AW9A91	SCREW,CAP,HEXAGON H	4
19	PAFZZ	5310-00-728-9957	19207	10910174-22	WASHER,FLAT	4
20	PAFKK	1240-01-621-1641	19200	13020355	GYROSCOPE,RATE INTERCHANGEABLE W/ 12292349	1
20	PAFDD	6615-01-099-0164	19207	12292349	GYROSCOPE,RATE INTERCHANGEABLE W/ 13020355, SEE FIG. 240 FOR BREAKDOWN	1

(1) ITEM NO.	(2) SMR CODE	(3) NSN	(4) CAGEC	(5) PART NUMBER	(6) DESCRIPTION AND USABLE ON CODE (UOC)	(7) QTY
21	PAFZZ	5340-01-650-3356	19200	12986653-4	BRACKET,MOUNTING	1
					END OF FIGURE	

BEREGINI BEREGINI BEREGINI

MAINTAINER

ELEVATION DRIVE, GUN (FTAXA) - 12317196

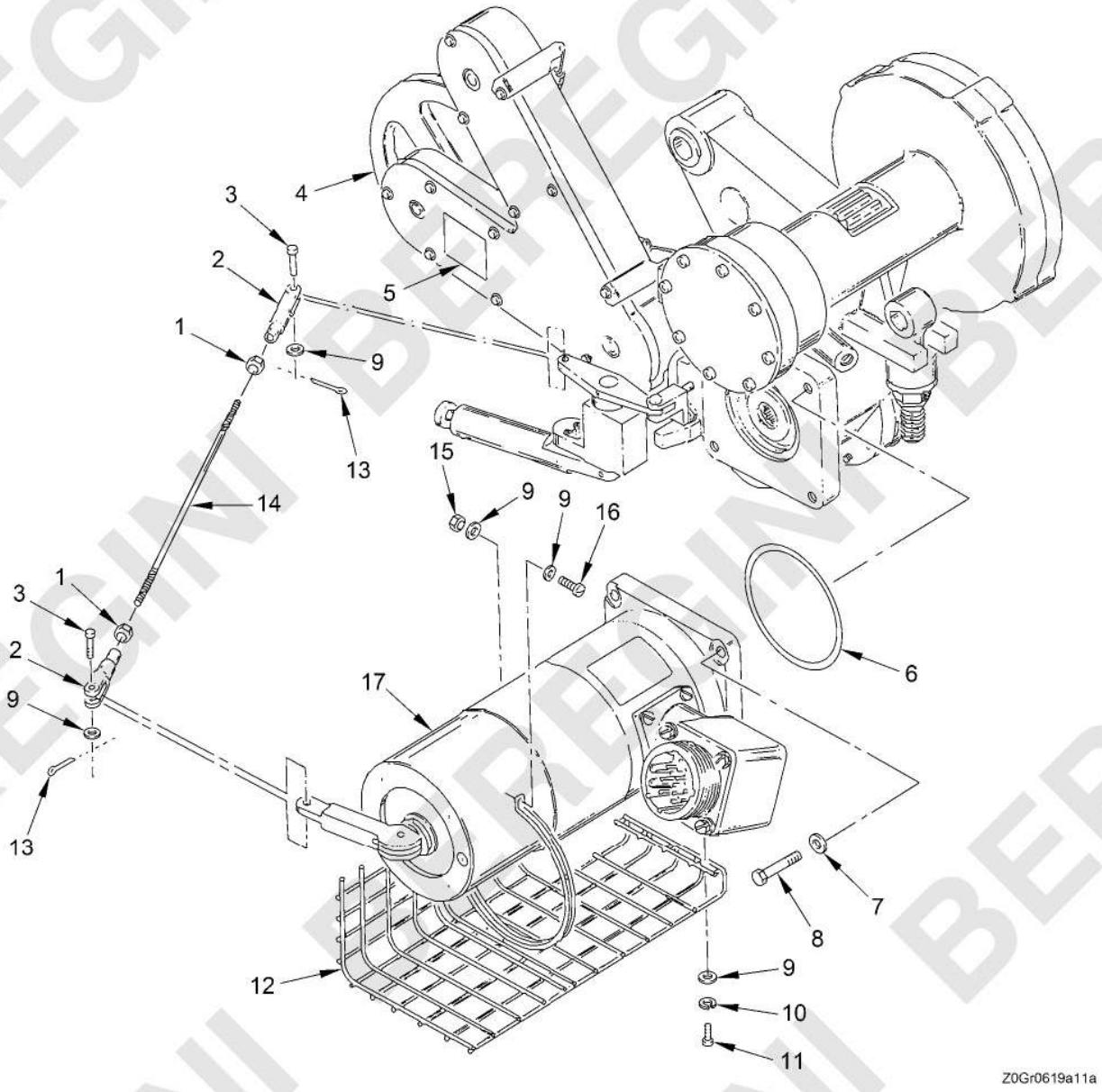

Figure 234. Elevation Drive, Gun (FTAXA) - 12317196

(1) ITEM NO.	(2) SMR CODE	(3) NSN	(4) CAGEC	(5) PART NUMBER	(6) DESCRIPTION AND USABLE ON CODE (UOC)	(7) QTY
					GROUP FTAXA GUN ELEVATION DRIVE	
					FIGURE 234 Elevation Drive, Gun (FTAXA) - 12317196	
1	PAFZZ	5310-00-768-0319	96906	MS51968-2	NUT,PLAIN,HEXAGON	2
2	PAFZZ	5340-00-257-3768	80205	MS27975-3	CLEVIS,ROD END	2
3	PAFZZ	5315-00-990-1338	80205	MS20392-2C19	PIN,STRAIGHT,HEADED	2
4	PAFHH	1005-01-192-7023	19207	12317197	GEARBOX ASSEMBLY,GU SEE FIG. 235 FOR BREAKDOWN	1
5	MDDZZ		19207	12317181-9	PLATE,IDENTIFICATIO MAKE FROM SHEET METAL P/N QQ-A-250/2-H14,0.032X48X144(14153)	1
6	PAFZZ	5331-00-420-7590	81343	MS28775-153	O-RING	1
7	PAFZZ	5310-00-773-7618	80205	MS15795-814	WASHER,FLAT	4
8	PAFZZ	5306-01-119-6763	05047	AEB02C375A50AW9A96	BOLT,MACHINE	4
9	PAFZZ	5310-00-619-1148	80205	MS15795-808	WASHER,FLAT	6
10	PAFZZ	5310-00-933-8120	80205	MS35338-138	WASHER,LOCK	2
11	PAFZZ	5305-00-050-9230	96906	MS51957-64	SCREW,MACHINE	2
12	PAFZZ	1005-01-112-6285	19207	12292543	GUARD,GUN ELEVATION	1
13	PAFZZ	5315-00-815-1405	80205	MS24665-151	PIN,COTTER	2
14	PAFZZ	5307-01-110-4384	19207	12292473	STUD,PLAIN	1
15	PAFZZ	5310-00-436-3290	80205	MS17830-010C	NUT,SELF-LOCKING,HE	1
16	PAFZZ	5305-00-050-9235	96906	MS51957-69	SCREW,MACHINE	1
17	XAFKK		19207	12292400-5	MOTOR,DIRECT CURREN ALTERNATE FOR 12292400-1	1
17	XAFKK		19207	12292400-1	MOTOR,DIRECT CURREN ALTERNATE FOR 12292400-5	1
17	PAFKK	6105-01-111-4892	19207	12292400	MOTOR,DIRECT CURREN	1
					END OF FIGURE	

BEREGINI BEREGINI BEREGINI

MAINTAINER

GEARBOX ASSEMBLY, GUN (FTAXAB) - 12317197

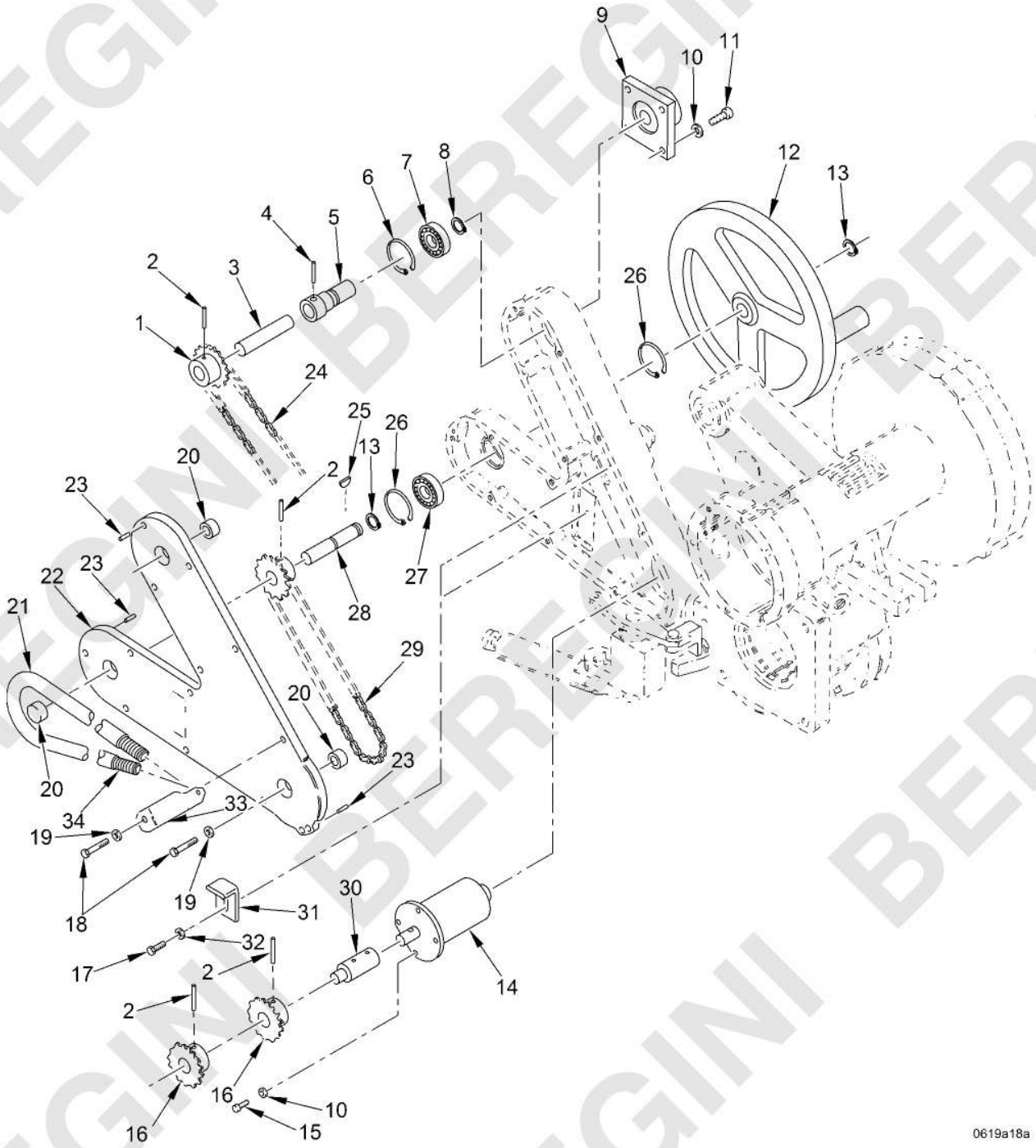

Figure 235. Gearbox Assembly, Gun (FTAXAB) - 12317197
(Sheet 1 of 3)

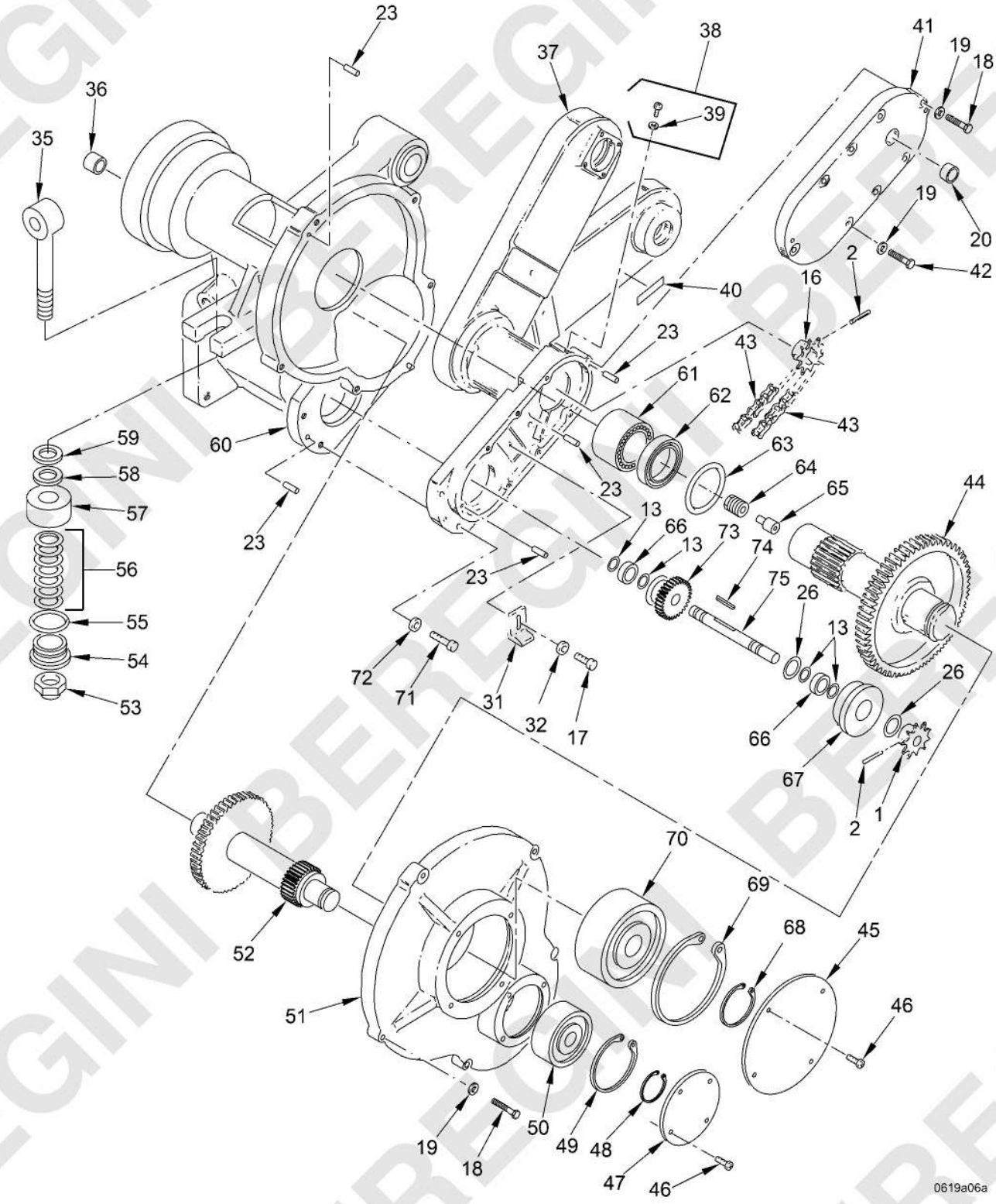

Figure 235. Gearbox Assembly, Gun (FTAXAB) - 12317197
(Sheet 2 of 3)

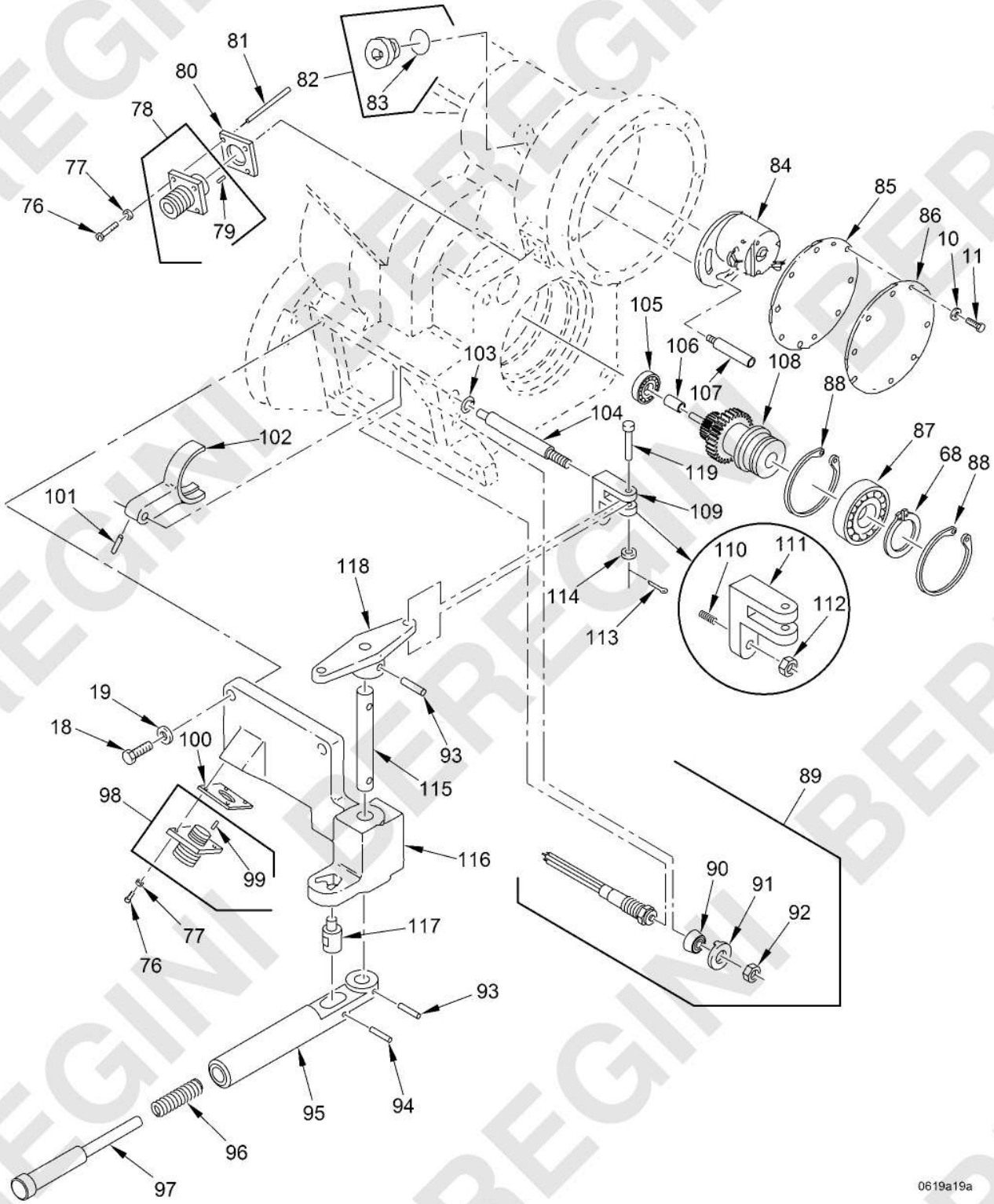

Figure 235. Gearbox Assembly, Gun (FTAXAB) - 12317197
(Sheet 3 of 3)

(1) ITEM NO.	(2) SMR CODE	(3) NSN	(4) CAGEC	(5) PART NUMBER	(6) DESCRIPTION AND USABLE ON CODE (UOC)	(7) QTY
					GROUP FTAXAB GUN GEARBOX ASSEMBLY	
					FIGURE 235 Gearbox Assembly, Gun (FTAXAB) - 12317197	
1	PAHZZ	3020-01-115-5597	19207	12292420-2	SPROCKET WHEEL	3
2	PAHZZ	5315-00-754-1854	80205	MS171595	PIN,SPRING	6
3	PAHZZ	3040-01-107-2360	19200	12292455	SHAFT,STRAIGHT	1
4	PAHZZ	5315-00-058-9782	80205	MS16562-236	PIN,SPRING	1
5	PAHZZ	3040-01-116-8156	19207	12292456	SHAFT,SHOULDERED	1
6	PAHZZ	5325-00-804-2274	79136	N5000-137H	RING,RETAINING	1
7	PAHZZ	3110-01-139-3312	19207	12292904-4	BEARING,BALL,ANNULA	1
8	PAHZZ	5325-00-634-7446	96906	MS16624-4066	RING,RETAINING	1
9	PAHZZ	3010-01-095-0329	19207	12292472	COUPLING,SHAFT,FLEX	1
10	PAFZZ	5310-00-880-5978	80205	MS15795-807	WASHER,FLAT	16
11	PAFZZ	5305-00-032-3697	80205	NAS1352-08LL10P	SCREW,CAP,SOCKET HE	12
12	PAHZZ	5340-01-116-8165	19207	12292616	HANDWHEEL	1
13	PAHZZ	5325-00-804-7645	96906	MS16624-4050	RING,RETAINING	6
14	PAHZZ	3010-01-098-7400	19207	12292783	CLUTCH ASSEMBLY,FRI	1
15	PAHZZ	5305-01-106-5225	80205	NAS1352-08LL8P	SCREW,CAP,SOCKET HE	4
16	PAHZZ	3020-01-108-4988	19200	12292420-1	SPROCKET WHEEL	3
17	PAFZZ	5305-00-050-9228	96906	MS51957-62	SCREW,MACHINE	3
18	PAFZZ	5306-01-119-9321	05047	AEB02C250A00AW9A96	BOLT,MACHINE	26
19	PAFZZ	5310-00-763-3925	96906	MS9321-10	WASHER,FLAT	30
20	PAHZZ	3110-01-147-2809	19207	12292876-3	BEARING,ROLLER,NEED	3
21	MFFZZ		80063	SM-A-680088-24	INSULATION SLEEVING MAKE FROM INSULATION P/N SM-A-680088-24(80063)	1
22	PAFZZ	1005-01-110-5551	19207	12292394	COVER,MANUAL DRIVE	1
23	PAHZZ	5315-00-822-0689	96906	MS16555-46	PIN,STRAIGHT,HEADLE	6
24	PAFZZ	3020-01-118-3681	19207	12292469-3	CHAIN,ROLLER	1
25	PAHZZ	5315-00-730-4451	80205	MS20066-97	KEY,MACHINE	1
26	PAHZZ	5325-00-598-1774	96906	MS16625-4112	RING,RETAINING	4
27	PAHZZ	3110-01-149-5931	19207	12292905-4	BEARING,BALL,ANNULA	1
28	PAHZZ	3040-01-101-3980	19207	12292458	SHAFT,STRAIGHT	1
29	PAFZZ	3020-01-130-3659	19207	12292469-2	CHAIN,ROLLER	1
30	PAHZZ	3040-01-106-5968	19207	12292481	SHAFT,SHOULDERED	1

(1) ITEM NO.	(2) SMR CODE	(3) NSN	(4) CAGEC	(5) PART NUMBER	(6) DESCRIPTION AND USABLE ON CODE (UOC)	(7) QTY
31	PAFZZ	1005-01-111-7789	19207	12292519	GUIDE,CHAIN	3
32	PAFZZ	5310-00-209-1239	96906	MS35335-60	WASHER,LOCK	3
33	PAFZZ	5340-01-124-2465	19207	12292536-1	BRACKET,ANGLE	1
34	PAFZZ	5360-01-096-5263	19207	12292533	SPRING,HELICAL,EXTE	1
35	PAHZZ	5306-01-115-1920	19207	12292836	BOLT,EYE	1
36	PAHZZ	3110-01-126-7823	19207	12292834-3	BEARING,ROLLER,NEED	1
37	PAHZZ	1005-01-113-1453	19207	12292393	HOUSING,MANUAL DRIV	1
38	PAFZZ	5305-00-068-0508	05047	AES01C250750AW9A91	SCREW,CAP,HEXAGON H	1
39	PAFZZ	5330-01-124-6384	19207	11629715	SEAL,PLAIN ENCASED	1
40	PADZZ	9905-01-560-4926	19207	12561105-5	PLATE,IDENTIFICATIO	1
41	PAFZZ	5340-01-612-7433	19207	12976388	COVER,ACCESS	1
42	PAFZZ	5306-01-118-2445	05047	AEB02C250B00AW9A96	BOLT,MACHINE	4
43	PAFZZ	3020-01-118-3682	19207	12292469-1	CHAIN,ROLLER	1
44	PAHZZ	3040-01-095-1021	19207	12292381	GEARSHAFT,SPUR	1
45	PAHZZ	5340-01-094-0904	19207	12292487-1	COVER,ACCESS	1
46	PAHZZ	5305-00-101-8601	96906	MS21090-0622	SCREW,CAP,SOCKET HE	8
47	PAHZZ	5340-01-109-6808	19207	12292487-2	COVER,ACCESS	1
48	PAHZZ	5325-00-807-8151	96906	MS16624-4098	RING,RETAINING	1
49	PAHZZ	5325-00-806-4638	96906	MS16625-4206	RING,RETAINING	1
50	PAHZZ	3110-01-149-5934	19207	12292906-4	BEARING,BALL,ANNULA	1
51	PAHZZ	1005-01-111-4002	19207	12292395	COVER,DRIVE ASSEMBL	1
52	PAHZZ	1005-01-145-9279	19207	12292923	SLIP CLUTCH ASSEMBL	1
53	PAFZZ	5310-00-245-3419	80205	MS17829-10C	NUT,SELF-LOCKING,HE	1
54	PAFZZ	5340-01-112-8613	19207	12292555	RETAINER,HELICAL CO	1
55	PCFZZ	5331-00-702-1048	81343	MS28775-126	O-RING	1
56	PAFZZ	5310-01-126-7829	19207	12292599-1	WASHER,SPRING TENSI	7
57	PAFZZ	5340-01-112-8614	19207	12292556	RETAINER,HELICAL CO	1
58	PCFZZ	5330-01-143-9215	80205	NAS1523C10E	PACKING WITH RETAIN	1
59	PAFZZ	5310-00-585-3243	81343	MS9320-16	WASHER,FLAT	1
60	XAHZZ		19207	12292908	HSG ASSY,ELEV DR	1
61	PAHZZ	3110-01-110-9814	19207	12292833-2	BEARING,ROLLER,NEED	1
62	PAHZZ	5330-01-110-5409	19207	12292835-1	SEAL,PLAIN ENCASED	1
63	PAHZZ	5331-00-297-9986	81343	MS28775-329	O-RING	1
64	PAHZZ	3010-01-144-8061	19207	12292801-1	COUPLING,SHAFT,FLEX	1

(1) ITEM NO.	(2) SMR CODE	(3) NSN	(4) CAGEC	(5) PART NUMBER	(6) DESCRIPTION AND USABLE ON CODE (UOC)	(7) QTY
65	PAHZZ	3040-01-110-9873	19207	12292471	SHAFT,SHOULDERED	1
66	PAHZZ	3110-01-152-5441	19207	12292905-3	BEARING,BALL,ANNULA	2
67	PAHZZ	1005-01-112-6269	19207	12292453	ADAPTER,GUN ELEVATI	1
68	PAHZZ	5325-00-720-9232	96906	MS16624-4156	RING,RETAINING	2
69	PAHZZ	5325-00-465-8927	96906	MS16625-4315	RING,RETAINING	1
70	PAHZZ	3110-01-149-5935	19207	12292906-7	BEARING,BALL,ANNULA	1
71	PAHZZ	5306-01-114-0963	05047	AEB02C375A00AW9A96	BOLT,MACHINE	3
72	PAHZZ	5310-00-167-0804	80205	NAS1149C0663R	WASHER,FLAT	3
73	PAHZZ	3020-01-101-1816	19207	12292385	GEAR,SPUR	1
74	PAHZZ	5315-00-730-4455	80205	MS20066-102	KEY,MACHINE	1
75	PAHZZ	3040-01-098-7995	19207	12292609	SHAFT,STRAIGHT	1
76	PAHZZ	5305-00-726-1241	96906	MS21090-0412	SCREW,CAP,SOCKET HE	8
77	PAHZZ	5310-00-595-6211	80205	MS15795-803	WASHER,FLAT	8
78	PAHZZ	5935-01-117-0029	19207	12292860-26	CONNECTOR,RECEPTACL	1
79	PAHZZ	5999-00-243-6500	81343	AS39029/58-363	CONTACT,ELECTRICAL	7
80	PAHZZ	5999-01-115-3255	19207	12292796-1	SHIELDING GASKET,EL	1
81	MFFZZ		81343	M22759/11-24-9	WIRE,ELECTRICAL MAKE FROM WIRE P/N M22759/11-24-9 (81349)	1
82	PAHZZ	5365-01-117-5208	19207	11627748-6	PLUG,MACHINE THREAD	1
83	PCHZZ	5331-00-808-0794	81343	MS28778-8	O-RING	1
84	PAHZZ	5905-01-206-0810	19207	12292899	RESISTOR,VARIABLE,N	1
85	PAFZZ	5330-01-115-5390	19207	12292486	GASKET	1
86	PAFZZ	5340-01-110-4385	19207	12292484	COVER,ACCESS	1
87	PAHZZ	3110-01-139-3311	19207	12292904-7	BEARING,BALL,ANNULA	1
88	PAHZZ	5325-00-853-9137	96906	MS16625-4268	RING,RETAINING	1
89	PAHZZ	5930-01-113-1347	19207	12292794-3	SWITCH,SENSITIVE	1
90	PAHZZ	5930-01-141-5368	81349	M5423/16-01	BOOT,DUST AND MOIST	1
91	PAHZZ	5310-01-300-0896	19200	9379434	.WASHER,KEY	1
92	PAHZZ	5310-01-139-1427	96906	MS21340-04	NUT,PLAIN,HEXAGON	1
93	PAFZZ	5315-00-058-9767	80205	MS16562-231	PIN,SPRING	2
94	PAHZZ	5315-00-614-3586	80205	MS16562-212	PIN,SPRING	1
95	PAHZZ	5340-01-097-4871	19207	12292411	LEVER,MANUAL CONTRO	1
96	PAHZZ	5360-01-110-5687	10001	3203133P16	SPRING,HELICAL,COMP	1
97	PAHZZ	5315-01-118-2598	19200	12292493	PIN,SHOULDER,HEADED	1

(1) ITEM NO.	(2) SMR CODE	(3) NSN	(4) CAGEC	(5) PART NUMBER	(6) DESCRIPTION AND USABLE ON CODE (UOC)	(7) QTY
98	PAHZZ	5935-01-370-0913	81349	D38999/20WA98PA	CONNECTOR,RECEPTACL	1
99	PAHZZ	5999-00-243-6500	81343	AS39029/58-363	CONTACT,ELECTRICAL	7
100	PAHZZ	5999-01-113-1506	19207	12292796-2	SHIELDING GASKET,EL	1
101	PAHZZ	5315-00-826-3251	80205	MS16562-223	PIN,SPRING	1
102	PAHZZ	2520-01-101-1845	19207	12292419-2	SHIFTER FORK	1
103	PCHZZ	5331-00-584-0265	81343	MS28775-012	O-RING	1
104	PAHZZ	5315-01-105-8974	19207	12292454	PIN,SHOULDER,HEADLE	1
105	PAHZZ	3110-01-118-8604	19207	12292834-1	BEARING,ROLLER,NEED	1
106	PAHZZ	3110-00-252-9620	96906	MS17130-62	RING,BEARING,INNER	1
107	PAHZZ	5340-01-149-8388	19207	12292902	POST,ELECTRICAL-MEC	2
108	PAHZZ	3040-01-110-5590	19207	12292384	GEARSHAFT,SPUR	1
109	PAFZZ	5330-01-109-1926	19207	11629619	GASKET	1
110	PAFZZ	5305-00-058-4106	80205	NAS1081-4A10L	SETSCREW	1
111	XAHZZ		19207	12292672	.CLEVIS	1
112	PAFZZ	5310-00-971-7989	96906	MS35691-5	NUT,PLAIN,HEXAGON	1
113	PAFZZ	5315-00-815-1405	80205	MS24665-151	PIN,COTTER	1
114	PAFZZ	5310-00-619-1148	80205	MS15795-808	WASHER,FLAT	1
115	PAHZZ	3040-01-095-9017	19207	12292470	SHAFT,STRAIGHT	1
116	PAFZZ	1005-01-115-0926	19207	12292415	SUPPORT,MANUAL	1
117	PAFZZ	5340-01-109-2070	19207	11628246	COVER,ACCESS	1
118	PAHZZ	3040-01-102-1657	19207	12292424	LEVER,REMOTE CONTRO	1
119	PAFZZ	5315-00-990-1338	80205	MS20392-2C19	PIN,STRAIGHT,HEADED	1
					END OF FIGURE	

MAINTAINER

TRAVERSE DRIVE ASSEMBLY (FTAXB) - 12976126

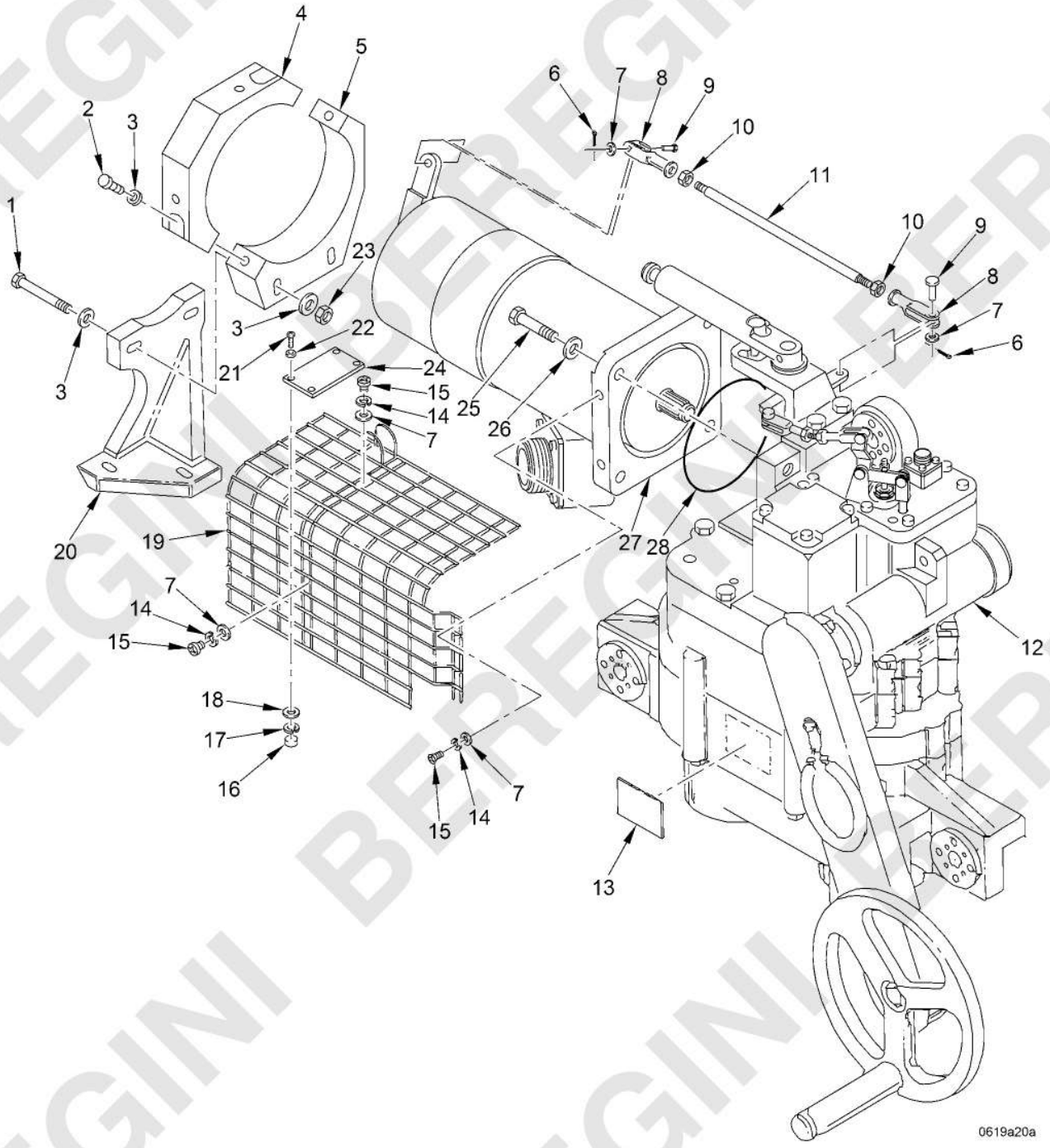

Figure 236. Traverse Drive Assembly (FTAXB) - 12976126

(1) ITEM NO.	(2) SMR CODE	(3) NSN	(4) CAGEC	(5) PART NUMBER	(6) DESCRIPTION AND USABLE ON CODE (UOC)	(7) QTY
					GROUP FTAXB TRAVERSE DRIVE ASSEMBLY	
					FIGURE 236 Traverse Drive Assembly (FTAXB) - 12976126	
1	PAFZZ	5305-00-071-2512	80204	B1821BH025C225N	SCREW,CAP,HEXAGON H	2
2	PAFZZ	5306-01-118-3133	05047	AEB02C250A25AW9A96	BOLT,MACHINE	2
3	PAFZZ	5310-00-582-5677	80205	MS15795-810	WASHER,FLAT	4
4	PAFZZ	5340-01-114-0207	19207	12292440	STRAP,RETAINING	1
5	PAFZZ	5340-01-116-8188	19207	12292441	CLAMP,LOOP	1
6	PAFZZ	5315-00-815-1405	80205	MS24665-151	PIN,COTTER	2
7	PAFZZ	5310-00-619-1148	80205	MS15795-808	WASHER,FLAT	6
8	PAFZZ	5340-00-257-3768	80205	MS27975-3	CLEVIS,ROD END	2
9	PAFZZ	5315-00-990-1338	80205	MS20392-2C19	PIN,STRAIGHT,HEADED	2
10	PAFZZ	5310-00-840-5785	96906	MS35691-7	NUT,PLAIN,HEXAGON	2
11	PAFZZ	5307-01-094-1587	19207	12292459	STUD,PLAIN	1
12	PAFHH	1005-01-113-1450	19207	12292588	GEAR BOX,TRAVERSE D	1
13	PADZZ	9905-01-569-9900	19207	12561104-17	PLATE,IDENTIFICATIO	1
14	PAFZZ	5310-00-933-8120	80205	MS35338-138	WASHER,LOCK	4
15	PAFZZ	5305-00-050-9229	96906	MS51957-63	SCREW,MACHINE	4
16	PAFZZ	5310-00-934-9748	80205	MS35649-244	NUT,PLAIN,HEXAGON	4
17	PAFZZ	5310-00-933-8118	80205	MS35338-135	WASHER,LOCK	4
18	PAFZZ	5340-01-113-1529	19207	12292863	STRAP,RETAINING	4
19	PAFZZ	1005-01-112-8559	19207	12292544	GUARD,TRAVERSE DRIV	1
20	PAFZZ	1005-01-112-3949	19207	12292439	SUPPORT,MOTOR	1
21	PAFZZ	5305-00-054-5647	96906	MS51957-13	SCREW,MACHINE	4
22	PAFZZ	5310-00-595-6211	80205	MS15795-803	WASHER,FLAT	4
23	PAFZZ	5310-00-241-6604	96906	MS17830-4C	NUT,SELF-LOCKING,HE	2
24	PAFZZ	9905-01-112-6249	19207	12292542	PLATE,INSTRUCTION	1
25	PAFZZ	5306-01-119-6763	05047	AEB02C375A50AW9A96	BOLT,MACHINE	4
26	PAFZZ	5310-00-773-7618	80205	MS15795-814	WASHER,FLAT	4
27	PAFKK	6105-01-462-7177	19200	12900597	MOTOR,DIRECT CURREN	1
28	PAFZZ	5331-00-420-7590	81343	MS28775-153	O-RING	1
					END OF FIGURE	

BEREGINI BEREGINI BEREGINI

MAINTAINER

GEARBOX, TRAVERSE DRIVE (FTAXBB) - 12292588

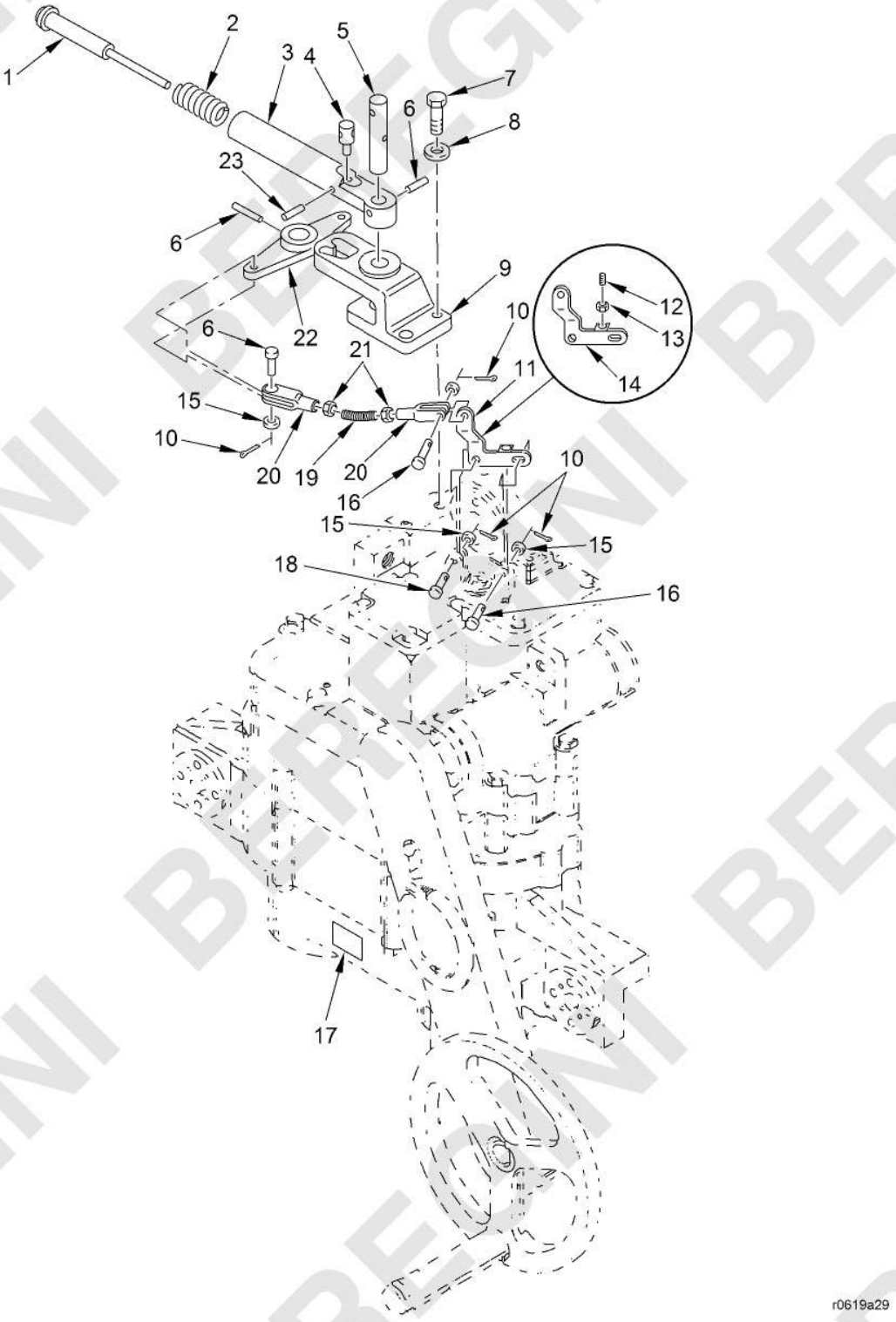

Figure 237. Gearbox, Traverse Drive (FTAXBB) - 12292588
(Sheet 1 of 2)

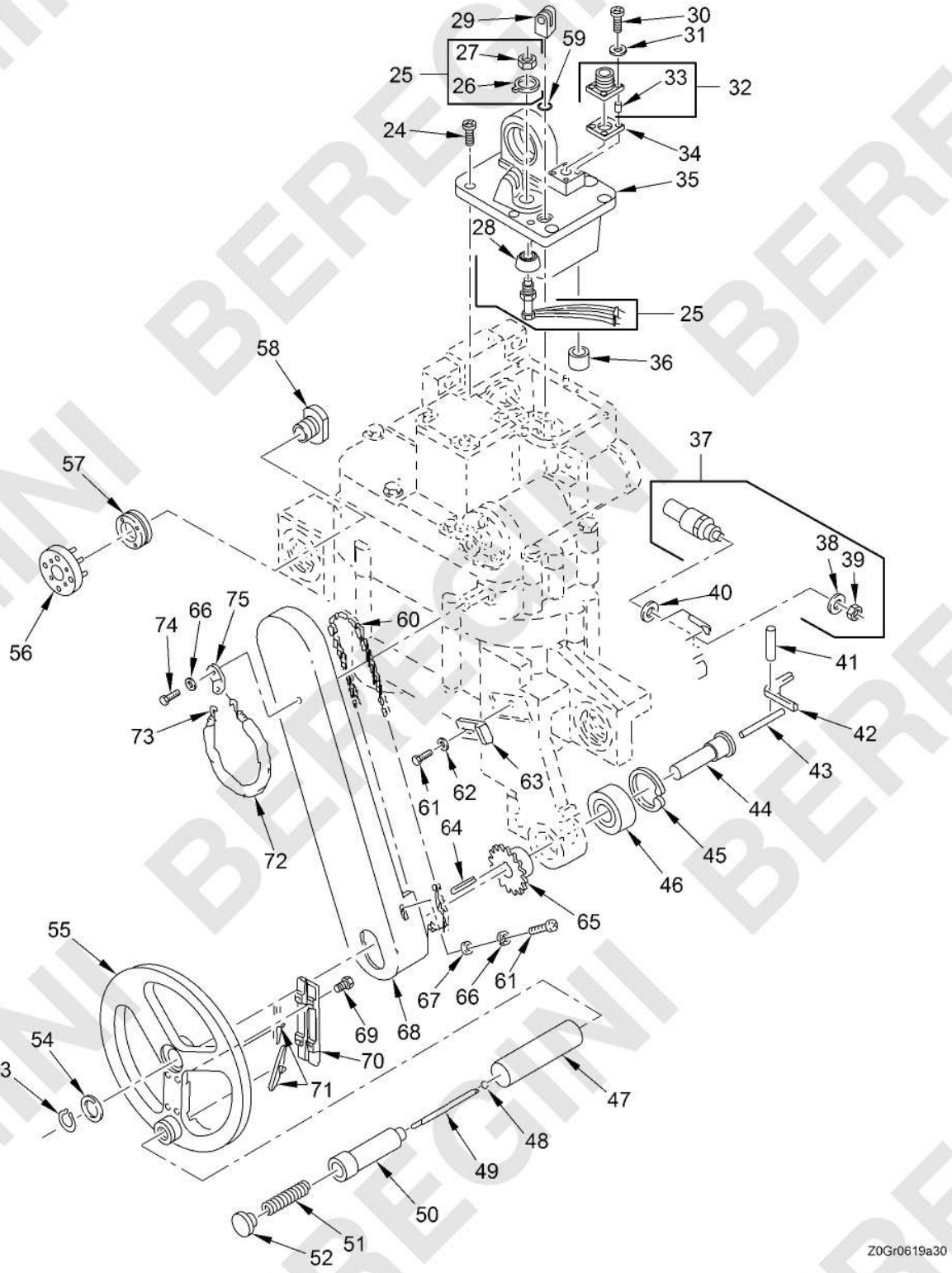

Figure 237. Gearbox, Traverse Drive (FTAXBB) - 12292588
(Sheet 2 of 2)

(1) ITEM NO.	(2) SMR CODE	(3) NSN	(4) CAGEC	(5) PART NUMBER	(6) DESCRIPTION AND USABLE ON CODE (UOC)	(7) QTY
					GROUP FTAXBB TRAVERSE DRIVE GEARBOX	
					FIGURE 237 Gearbox, Traverse Drive (FTAXBB) - 12292588	
1	PAHZZ	5315-01-118-2598	19200	12292493	PIN,SHOULDER,HEADED	1
2	PAHZZ	5360-01-110-5687	10001	3203133P16	SPRING,HELICAL,COMP	1
3	PAHZZ	5340-01-097-4871	19207	12292411	LEVER,MANUAL CONTRO	1
4	PAHZZ	5315-01-101-1761	19207	12292502	PIN,SHOULDER,HEADLE	1
5	PAHZZ	5315-01-112-3916	19207	12292501	PIN,STRAIGHT,HEADLE	1
6	PAHZZ	5315-00-058-9767	80205	MS16562-231	PIN,SPRING	2
7	PAHZZ	5306-01-119-9321	05047	AEB02C250A00AW9A96	BOLT,MACHINE	3
8	PAHZZ	5310-00-763-3925	96906	MS9321-10	WASHER,FLAT	2
9	PAHZZ	1005-01-111-5726	19207	12292417	SUPPORT,MANUAL INTE	1
10	PAFZZ	5315-00-815-1405	80205	MS24665-151	PIN,COTTER	5
11	PAFHH	3040-01-112-8254	19207	12292377	LEVER,REMOTE CONTRO	1
12	PAFZZ	5305-01-213-4005	80205	MS51966-131	SETSCREW	1
13	PAFZZ	5310-00-971-7989	96906	MS35691-5	NUT,PLAIN,HEXAGON	1
14	XAFZZ		19207	12292673	BELL CRANK	1
15	PAFZZ	5310-00-619-1148	80205	MS15795-808	WASHER,FLAT	9
16	PAFZZ	5315-00-990-1338	80205	MS20392-2C19	PIN,STRAIGHT,HEADED	3
17	PADZZ	9905-01-559-6194	19207	12561105-2	PLATE,IDENTIFICATIO	1
18	PAFZZ	5315-00-080-1941	96906	MS20392-2C27	PIN,STRAIGHT,HEADED	2
19	PAHZZ	5307-01-112-1598	19207	12292500	STUD,CONTINUOUS THR	1
20	PAFZZ	5340-00-257-3768	80205	MS27975-3	CLEVIS,ROD END	2
21	PAHZZ	5310-00-840-5785	96906	MS35691-7	NUT,PLAIN,HEXAGON	2
22	PAHZZ	3040-01-108-4981	19207	12292435	LEVER,REMOTE CONTRO	1
23	PAHZZ	5315-00-614-3586	80205	MS16562-212	PIN,SPRING	1
24	PAFZZ	5305-01-136-1724	80205	NAS1352-4LL14P	SCREW,CAP,SOCKET HE	6
25	PAHZZ	5930-01-117-9780	19207	12292794-2	SWITCH,SENSITIVE S1	1
26	PAHZZ	5310-01-300-0896	19200	9379434	.WASHER,KEY	1
27	PAHZZ	5310-01-139-1427	96906	MS21340-04	NUT,PLAIN,HEXAGON	2
28	PAHZZ	5930-01-141-5368	81349	M5423/16-01	BOOT,DUST AND MOIST	1
29	PAHZZ	5340-01-112-8198	19207	12292421	CLEVIS,ROD END	1
30	PAHZZ	5305-00-726-1241	96906	MS21090-0412	SCREW,CAP,SOCKET HE	4

(1) ITEM NO.	(2) SMR CODE	(3) NSN	(4) CAGEC	(5) PART NUMBER	(6) DESCRIPTION AND USABLE ON CODE (UOC)	(7) QTY
31	PAHZZ	5310-00-595-6211	80205	MS15795-803	WASHER,FLAT	4
32	PAHZZ	5935-01-116-4448	19207	12292860-1	CONNECTOR,RECEPTACL	1
33	PAHZZ	5999-00-243-6500	81343	AS39029/58-363	CONTACT,ELECTRICAL	3
34	PAHZZ	5999-01-113-1506	19207	12292796-2	SHIELDING GASKET,EL	1
35	PAHZZ	1005-01-111-5725	19207	12292410	COVER,TRAVERSING DR	1
36	PADZZ	3110-00-227-4710	81346	MS17131-11	BEARING,ROLLER,NEED	1
37	PAFZZ	1005-01-095-5203	19200	12292794-1	SWITCH 2A201FS	1
38	PAFZZ	5310-01-078-9699	80205	MS35333-136	WASHER,LOCK	1
39	PAFZZ	5310-01-139-1427	96906	MS21340-04	NUT,PLAIN,HEXAGON	1
40	PAFZZ	5365-01-192-1517	19207	12317187	SPACER,SLEEVE	1
41	PAHZZ	5315-00-958-8274	80205	NASM16555-45	PIN,STRAIGHT,HEADLE	1
42	PAHZZ	1005-01-111-5728	19207	12292438	LEVER,SWITCH	1
43	PAFZZ	5315-01-118-1575	19207	12292464-1	PIN,STRAIGHT,HEADLE	1
44	PAHZZ	3040-01-194-7959	19207	12292467-1	SHAFT,SHOULDERED	1
45	PAHZZ	5325-00-806-0204	96906	MS16625-4156	RING,RETAINING	2
46	PAHZZ	3110-01-149-5937	19207	12292906-2	BEARING,BALL,ANNULA	2
47	PAHZZ	5365-01-113-2540	19207	12292494	SPACER,SLEEVE	1
48	PAHZZ	5325-00-432-3584	80205	NAS51-18	RING,RETAINING	1
49	PAHZZ	5315-01-194-5607	19207	12292490-1	PIN,SHOULDER,HEADLE	1
50	PAHZZ	1005-01-095-0330	19200	12292492	HANDLE	1
51	PAHZZ	5360-01-110-5686	10001	3203133P13	SPRING,HELICAL,COMP	1
52	PAHZZ	5930-01-095-5202	19207	12292491	PUSH BUTTON	1
53	PAFZZ	5325-00-804-7646	96906	MS16624-4056	RING,RETAINING	1
54	PAFZZ	5310-01-108-7548	19207	12292466	WASHER,FLAT	1
55	PAHZZ	5340-01-218-6174	19207	12317195	HANDWHEEL	1
56	PAFZZ	1005-01-112-6281	19207	12317179	WASHER,ASSEMBLY	3
57	PAFZZ	5365-01-114-9505	19207	12292558	RING,EXTERNALLY THR	3
58	PAFZZ	3120-01-112-8488	19207	12292559	BUSHING,SLEEVE	3
59	PCFZZ	5331-00-584-0265	81343	MS28775-012	O-RING	1
60	PAFZZ	3020-01-118-3680	19207	12292469-4	CHAIN,ROLLER	1
61	PAFZZ	5305-00-050-9229	96906	MS51957-63	SCREW,MACHINE	3
62	PAFZZ	5310-00-209-1239	96906	MS35335-60	WASHER,LOCK	1
63	PAFZZ	1005-01-111-7789	19207	12292519	GUIDE,CHAIN	1
64	PAHZZ	5315-00-855-7331	80205	MS20066-105	KEY,MACHINE	2

(1) ITEM NO.	(2) SMR CODE	(3) NSN	(4) CAGEC	(5) PART NUMBER	(6) DESCRIPTION AND USABLE ON CODE (UOC)	(7) QTY
65	PAHZZ	3020-01-204-5879	19207	12292420-4	SPROCKET WHEEL	1
66	PAFZZ	5310-00-933-8120	80205	MS35338-138	WASHER,LOCK	4
67	PAFZZ	5310-01-273-4535	80205	MS15795-848	WASHER,FLAT	1
68	PAFZZ	1005-01-112-8553	19207	12292489	GUARD,TRAVERSE DRIV	1
69	PAHZZ	5305-01-061-1413	80205	NAS1352-06LL6P	SCREW,CAP,SOCKET HE	4
70	PAHZZ	5340-01-112-1601	19207	12292495	COVER,ACCESS	1
71	PAHZZ	5340-01-201-0757	19207	12292437-1	LEVER,MANUAL CONTRO	2
72	MFFZZ		80063	SM-A-680088-24	INSULATION SLEEVING MAKE FROM INSULATION P/N SM-A-680088-24(80063)	1
73	PAFZZ	5360-01-096-5263	19207	12292533	SPRING,HELICAL,EXTE	1
74	PAFZZ	5305-00-050-9230	96906	MS51957-64	SCREW,MACHINE	1
75	PAFZZ	5340-01-117-9773	19207	12292462	BRACKET,ANGLE	1
					END OF FIGURE	

MAINTAINER

GEARBOX, TRAVERSE DRIVE (FTAXBB) - 12292588

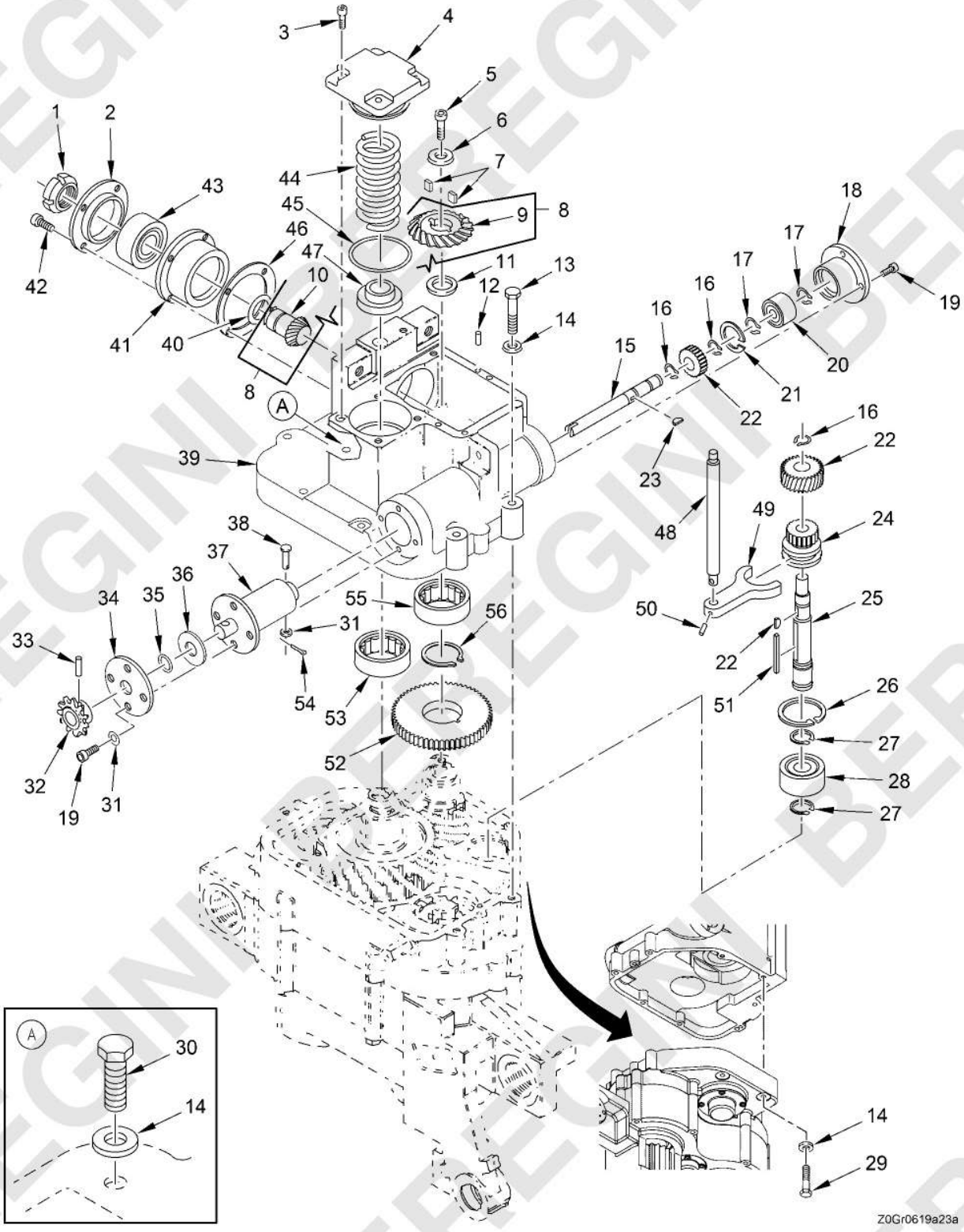

Figure 238. Gearbox, Traverse Drive (FTAXBB) - 12292588
(Sheet 1 of 2)

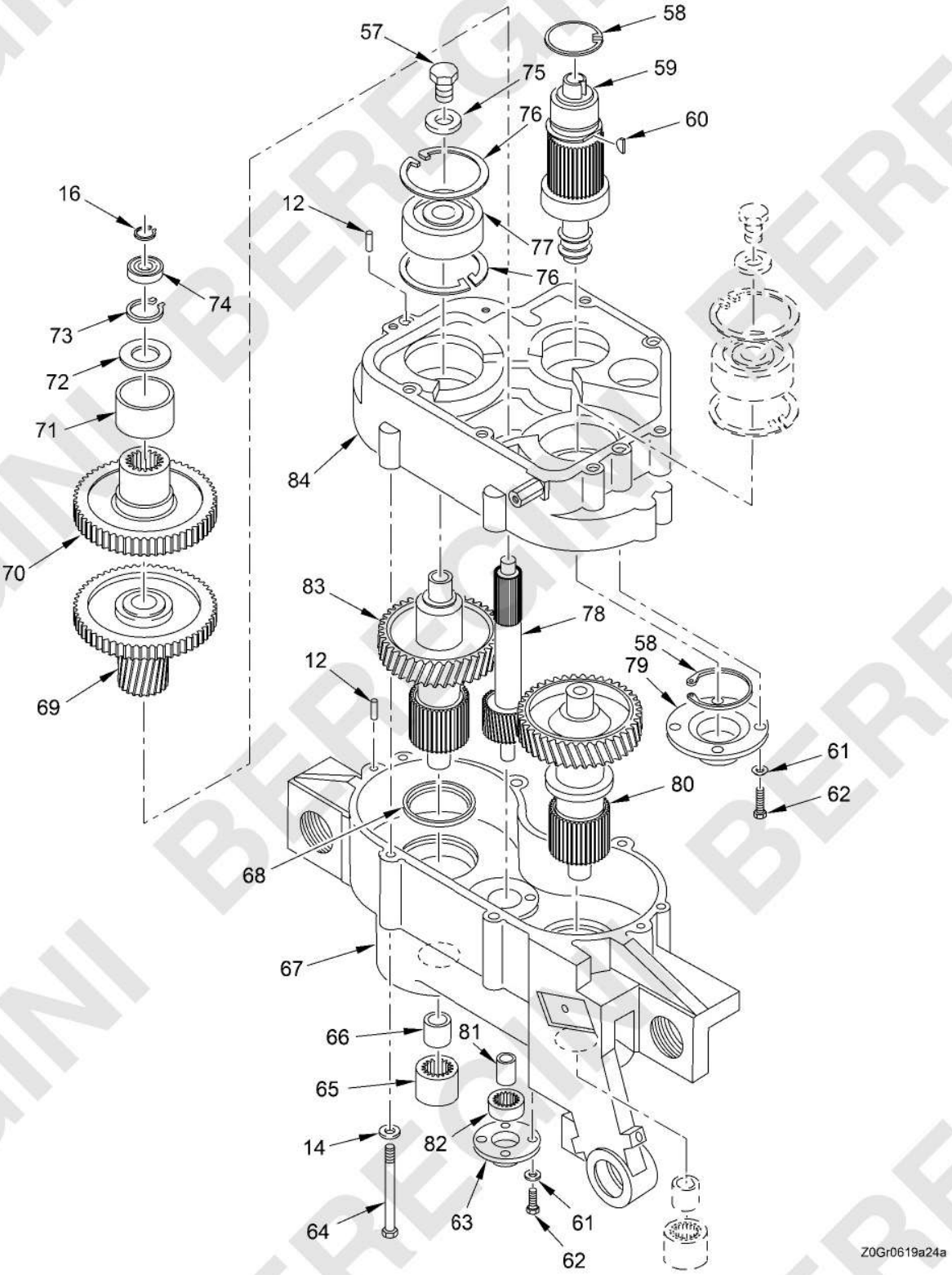

Figure 238. Gearbox, Traverse Drive (FTAXBB) - 12292588
(Sheet 2 of 2)

(1) ITEM NO.	(2) SMR CODE	(3) NSN	(4) CAGEC	(5) PART NUMBER	(6) DESCRIPTION AND USABLE ON CODE (UOC)	(7) QTY
					GROUP FTAXBB TRAVERSE DRIVE GEARBOX	
					FIGURE 238 Gearbox, Traverse Drive (FTAXBB) - 12292588	
1	PAHZZ	5310-01-206-0792	19207	12292784-4	NUT,SELF-LOCKING,RO	1
2	PAHZZ	3110-01-112-8008	19207	12292433	RETAINER,BALL,BEARI	1
3	PAFZZ	5305-00-932-1658	80205	NAS1352-4LE20P	SCREW,CAP,SOCKET HE	4
4	PAHZZ	5340-01-113-3829	19207	12292431	RETAINER,HELICAL CO	1
5	PAHZZ	5306-01-111-3518	80205	MS35764-1202	BOLT,SELF-LOCKING	1
6	PAHZZ	5310-01-117-9450	19207	12292460-3	WASHER,FLAT	1
7	PAHZZ	5315-00-730-4609	80205	MS20066-159	KEY,MACHINE	2
8	PAHZZ	3020-01-100-8586	19207	12292444	GEAR SET,BEVEL,MATC	1
9	XAHZZ		19200	12292363	.GEAR,BEVEL	1
10	XAHZZ		19207	12292364	.GEAR,BEVEL	1
11	PAHZZ	5365-01-092-9563	19207	12292461	SPACER,RING	1
12	PAHZZ	5315-00-822-0689	96906	MS16555-46	PIN,STRAIGHT,HEADLE	6
13	PAHZZ	5306-01-118-2445	05047	AEB02C250B00AW9A96	BOLT,MACHINE	5
14	PAHZZ	5310-00-582-5677	80205	MS15795-810	WASHER,FLAT	13
15	PAHZZ	5306-01-117-9415	05047	AEB02C250B25AW9A96	BOLT,MACHINE	2
16	PAHZZ	3040-01-109-1452	19207	12292670	SHAFT,SHOULDERED	1
17	PAHZZ	5325-00-804-7645	96906	MS16624-4050	RING,RETAINING	5
18	PAHZZ	5325-00-263-5907	96906	MS16624-4046	RING,RETAINING	2
19	PAHZZ	5340-01-108-4889	19207	12292434	COVER,ACCESS	1
20	PAHZZ	5305-00-781-1100	80205	NAS1352-3LL8P	SCREW,CAP,SOCKET HE	4
21	PAHZZ	3110-01-149-5936	19207	12292906-1	BEARING,BALL,ANNULA	1
22	PAHZZ	5325-00-804-2275	96906	MS16625-4125	RING,RETAINING	1
23	PAHZZ	3020-01-093-8786	19207	12292811	GEAR,HELICAL	2
24	PAHZZ	5315-00-616-5514	80205	MS35756-6	KEY,WOODRUFF	2
25	PAHZZ	3020-01-133-8835	19207	12292365	GEAR,SPUR	1
26	PAHZZ	3040-01-108-4911	19207	12292671	SHAFT,SHOULDERED	1
27	PAHZZ	5325-00-806-0204	96906	MS16625-4156	RING,RETAINING	2
28	PAHZZ	5325-00-634-7446	96906	MS16624-4066	RING,RETAINING	2
29	PAHZZ	3110-01-149-5937	19207	12292906-2	BEARING,BALL,ANNULA	2
30	PAHZZ	5306-01-119-9321	05047	AEB02C250A00AW9A96	BOLT,MACHINE	3

(1) ITEM NO.	(2) SMR CODE	(3) NSN	(4) CAGEC	(5) PART NUMBER	(6) DESCRIPTION AND USABLE ON CODE (UOC)	(7) QTY
31	PAFZZ	5310-00-619-1148	80205	MS15795-808	WASHER,FLAT	9
32	PAHZZ	3020-01-279-1675	19207	12292420-5	SPROCKET WHEEL	1
33	PAHZZ	5315-00-754-1854	80205	MS171595	PIN,SPRING	1
34	PAHZZ	3040-01-281-1426	19200	9379389	PLATE,RETAINING,SHA	1
35	PAHZZ	5330-01-281-1338	19200	9379390	SEAL,PLAIN	1
36	PAHZZ	5331-00-618-1665	81343	MS29561-130	O-RING	1
37	PAHZZ	3010-01-098-7400	19207	12292783	CLUTCH ASSEMBLY,FRI	1
38	PAFZZ	5315-00-080-1941	96906	MS20392-2C27	PIN,STRAIGHT,HEADED	2
39	XAHZZ		19207	12292354	HOUSING,MECHANICAL	1
40	PAHZZ	5325-00-421-4945	96906	MS16626-4100	RING,RETAINING	1
41	PAHZZ	3110-01-111-5583	19207	12292432	RETAINER,BALL,BEARI	1
42	PAHZZ	5305-00-528-5147	80205	NAS1352-08LL12P	SCREW,CAP,SOCKET HE	4
43	PAHZZ	3110-01-151-6534	19207	12292906-3	BEARING,BALL,ANNULA	1
44	PAHZZ	5360-01-118-1735	10001	3203133P14	SPRING,HELICAL,COMP	1
45	PCHZZ	5331-01-183-0972	81343	M83461/1-226	O-RING	1
46	PAHZZ	5365-01-091-5750	19207	12292477	SPACER,RING	1
47	PAHZZ	5340-01-108-7912	19207	12292442	RETAINER,HELICAL CO	1
48	PAHZZ	3040-01-095-2312	19207	12292463	SHAFT,SHOULDERED	1
49	PAHZZ	2520-01-114-9499	19207	12292419-1	SHIFTER FORK	1
50	PAHZZ	5315-00-826-3251	80205	MS16562-223	PIN,SPRING	1
51	PAHZZ	5315-00-855-7331	80205	MS20066-105	KEY,MACHINE	2
52	PAHZZ	3020-01-094-6994	19207	12292367	GEAR,SPUR	1
53	PAHZZ	3110-01-621-2113	19207	12900737-46	BEARING,ROLLER,NEED	1
54	PAFZZ	5315-00-815-1405	80205	MS24665-151	PIN,COTTER	5
55	PAHZZ	3110-01-623-1254	19207	12900737-38	BEARING,ROLLER,NEED	1
56	PAHZZ	5325-00-241-0447	96906	MS16624-4131	RING,RETAINING	1
57	PAHZZ	5306-01-113-9748	05047	AEB02F500750AW9A96	BOLT,MACHINE	2
58	PAHZZ	5325-00-806-4638	96906	MS16625-4206	RING,RETAINING	2
59	PAHZZ	1005-01-145-9281	19207	12292576	SLIP CLUTCH ASSEMBL	1
60	PAHZZ	5315-00-687-5218	80205	MS35756-3	KEY,WOODRUFF	1
61	PAHZZ	5310-00-880-5978	80205	MS15795-807	WASHER,FLAT	8
62	PAHZZ	5305-00-078-0244	96906	MS21090-0838	SCREW,CAP,SOCKET HE	8
63	PAHZZ	5340-01-095-0806	19207	12292427	COVER,ACCESS	1
64	PAHZZ	5306-01-117-9416	05047	AEB02C250C25AW9A96	BOLT,MACHINE	6

(1) ITEM NO.	(2) SMR CODE	(3) NSN	(4) CAGEC	(5) PART NUMBER	(6) DESCRIPTION AND USABLE ON CODE (UOC)	(7) QTY
65	PAHZZ	3110-01-114-3849	19207	12292832-1	BEARING,ROLLER,NEED	2
66	PAHZZ	3110-01-117-2439	96906	MS17130-8	RING,BEARING,INNER	2
67	XAHZZ		19207	12292330	HSG,LOWER TRAV DR	1
68	PAHZZ	5330-01-111-4510	19207	12292835-2	SEAL,PLAIN ENCASED	2
69	PAHZZ	3040-01-098-2315	19207	12292366	GEARSHAFT,MULTIPLE	1
70	PAHZZ	3020-01-105-5542	19207	12292333	GEAR,SPUR	1
71	PAHZZ	3110-01-117-2437	96906	MS17130-21	RING,BEARING,INNER	1
72	PAHZZ	5310-01-102-9869	19207	12292465	WASHER,FLAT	1
73	PAHZZ	5325-00-598-1785	96906	MS16624-4100	RING,RETAINING	1
74	PAHZZ	3110-01-198-3895	19207	12292905-2	BEARING,BALL,AIRFRA	1
75	PAHZZ	5310-01-111-3981	19207	12292460-1	WASHER,FLAT	2
76	PAHZZ	5325-00-806-0202	96906	MS16625-4244	RING,RETAINING	4
77	PAHZZ	3110-01-149-5938	19207	12292906-5	BEARING,BALL,ANNULA	1
78	PAHZZ	3040-01-099-8473	19207	12292362	GEARSHAFT,HELICAL	1
79	PAHZZ	5340-01-094-0903	19207	12292426	COVER,ACCESS	1
80	PAHZZ	3040-01-099-8474	19207	12292360	GEARSHAFT,MULTIPLE	1
81	PAHZZ	3110-01-117-2438	96906	MS17130-67	RING,BEARING,INNER	1
82	PAHZZ	3110-01-621-2830	19207	12900737-71	BEARING,ROLLER,NEED	1
83	PAFHH	2815-01-108-5386	15434	3004152	FLYWHEEL,ENGINE	1
84	XAHZZ		19207	12292327	HOUSING,MECHANICAL	1
					END OF FIGURE	

MAINTAINER

GYRO ASSEMBLY, GUN, 2A208 (FTAXD) - 12292348

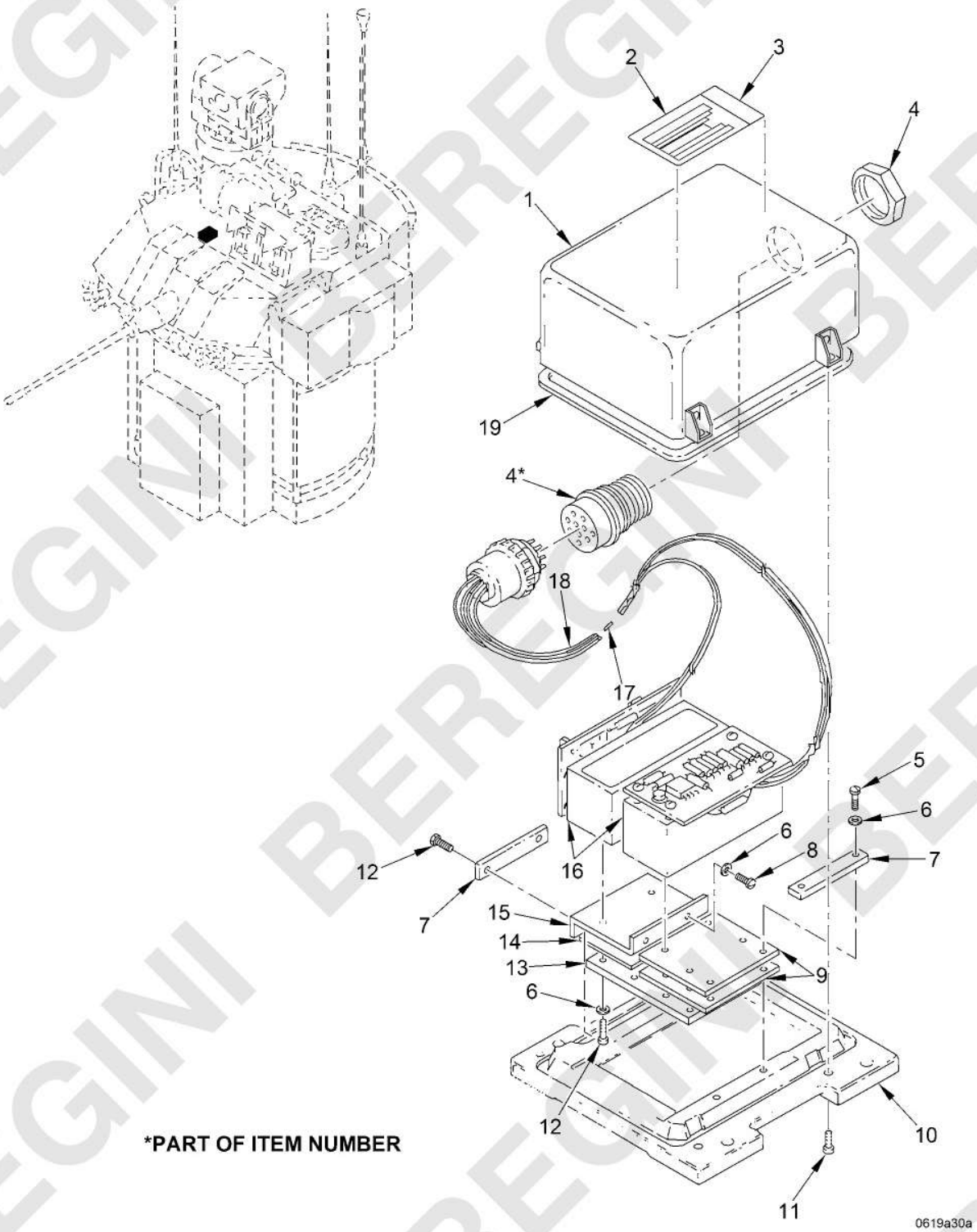

Figure 239. Gyro Assembly, Gun, 2A208 (FTAXD) - 12292348

(1) ITEM NO.	(2) SMR CODE	(3) NSN	(4) CAGEC	(5) PART NUMBER	(6) DESCRIPTION AND USABLE ON CODE (UOC)	(7) QTY
					GROUP FTAXD 2A208 GUN GYRO ASSEMBLY	
					FIGURE 239 Gyro Assembly, Gun, 2A208 (FTAXD) - 12292348	
1	XADZZ		19207	12292413	COVER,ACCESS	1
2	PADZZ	9905-01-559-6193	19207	12561104-3	PLATE,IDENTIFICATIO	1
3	MDDZZ		19207	12292729	PLATE,INSTRUCTION MAKE FROM SHEET METAL P/N QQ-A-250/2-H14,0.032X48X144(14153)	1
4	PADZZ	5935-01-116-4447	19207	12292860-23	CONNECTOR,RECEPTACL	1
5	PAFZZ	4330-01-460-9939	19207	12386442	BRACKET,FILTER MOUN	2
6	PADZZ	5310-00-595-6211	80205	MS15795-803	WASHER,FLAT	12
7	PADZZ	1005-01-112-8560	19207	12292552-1	BLOCK,CLAMP	2
8	PADZZ	5305-00-054-5646	96906	MS51957-12	SCREW,MACHINE	2
9	PADZZ	1005-01-112-6280	19207	12292549	SUPPORT,GYRO	2
10	PADZZ	1005-01-111-5722	19207	12292376	BASE,GYRO BLOCK	1
11	PADZZ	5305-00-054-6653	96906	MS51957-29	SCREW,MACHINE	4
12	PAFZZ	5310-00-877-5796	80205	MS21044N4	NUT,SELF-LOCKING,HE	10
13	PADZZ	1005-01-112-6278	19207	12292547	PLATE,STIFFENER	1
14	PADZZ	1005-01-112-6282	19207	12292569	SUPPORT,GYRO	1
15	PADZZ	1005-01-112-6279	19207	12292548	SUPPORT,GYRO	1
16	XADZZ		19207	12292197	GYRO RATE AND DEMOD	2
17	PADZZ	5940-01-135-7091	81349	M83519/2-13	SPLICE,CONDUCTOR	4
18	MDDZZ		81343	M22759/11-22-8	WIRE,ELECTRICAL MAKE FROM WIRE P/N M22759/11-22-8 (81343)	1
19	PADZZ	5330-01-188-7645	19207	12317202	GASKET	1
					END OF FIGURE	

BEREGINI BEREGINI BEREGINI

MAINTAINER

RATE GYROSCOPE, 2A207 - 12292349

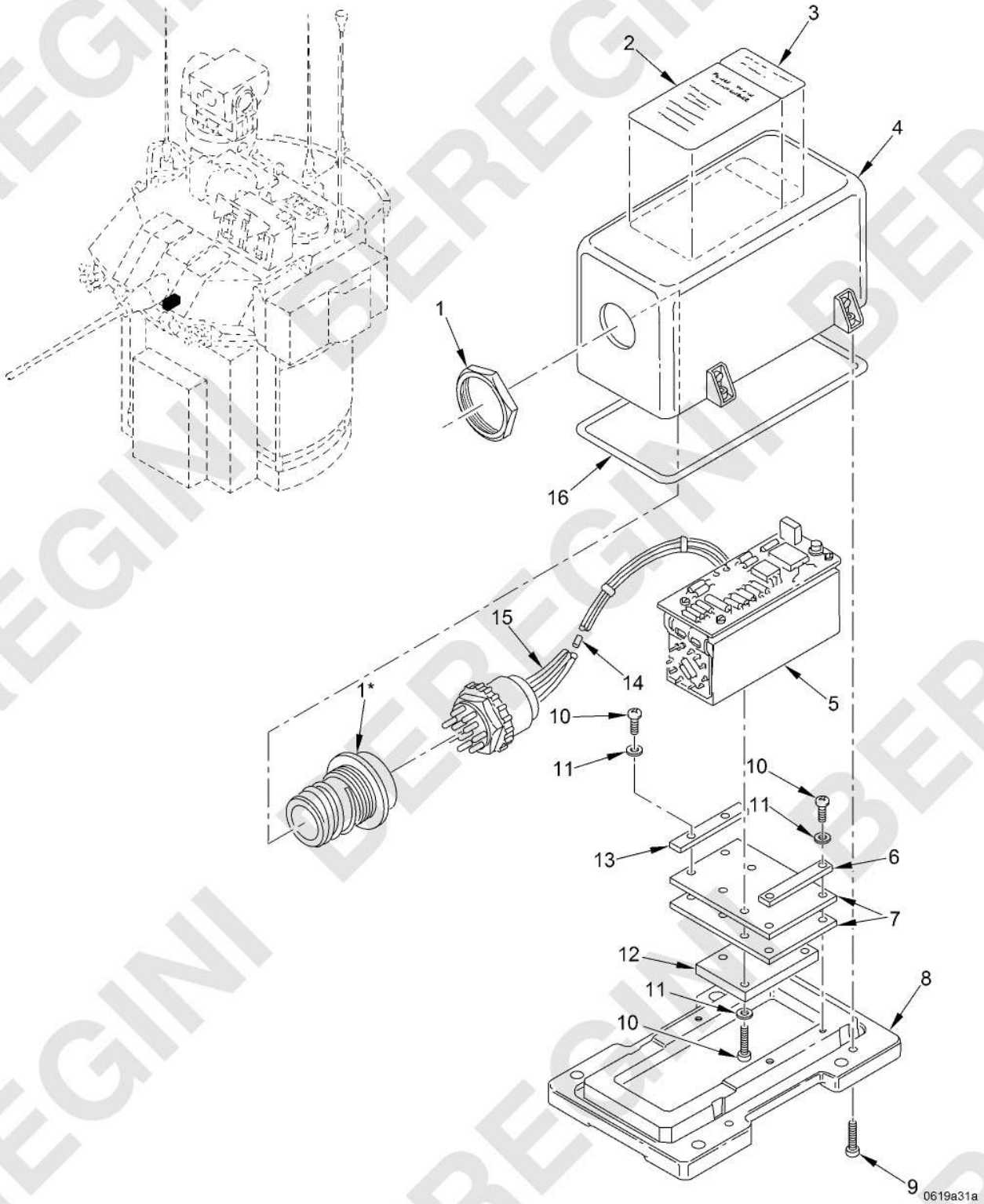

Figure 240. Rate Gyroscope, 2A207 - 12292349

(1) ITEM NO.	(2) SMR CODE	(3) NSN	(4) CAGEC	(5) PART NUMBER	(6) DESCRIPTION AND USABLE ON CODE (UOC)	(7) QTY
					GROUP FTAXE 2A207 RATE GYROSCOPE	
					FIGURE 240 Rate Gyroscope, 2A207 - 12292349	
1	PADZZ	5935-01-114-3834	19207	12292860-6	CONNECTOR,RECEPTACL J1	1
2	PADZZ	9905-01-559-6199	19207	12561104-4	PLATE,IDENTIFICATIO	1
3	MDDZZ		19207	12292729	PLATE,INSTRUCTION MAKE FROM SHEET METAL P/N QQ-A-250/2-H14,0.032X48X144(14153)	1
4	PADZZ	5340-01-111-5605	19200	12292414	COVER,ACCESS	1
5	XADZZ		19207	12292197	GYRO RATE AND DEMOD	1
6	PADZZ	1005-01-112-8560	19207	12292552-1	BLOCK,CLAMP	1
7	MDDZZ		19207	12292550	SUPPORT,GYRO MAKE FROM SHEET METAL P/N QQ-A-250/12-T6,0.032X48X12(14153)	2
8	XADZZ		19207	12292379	BASE,GYRO BLOCK	1
9	PADZZ	5305-00-054-6653	96906	MS51957-29	SCREW,MACHINE	4
10	PADZZ	5305-00-079-7370	80205	NAS1190C04P5L	SCREW,CAP,SOCKET HE	8
11	PADZZ	5310-00-595-6211	80205	MS15795-803	WASHER,FLAT	8
12	PADZZ	5365-01-458-4365	19207	12292551	SPACER,PLATE	1
13	XDDZZ		19207	12292552-2	BLOCK,CLAMP	1
14	PADZZ	5940-01-135-7091	81349	M83519/2-13	SPLICE,CONDUCTOR	2
15	MDDZZ		81343	M22759/11-22-8	WIRE,ELECTRICAL MAKE FROM WIRE P/N M22759/11-22-8 (81343)	1
16	PADZZ	5330-01-190-5814	19207	12317203	GASKET	1
					END OF FIGURE	

0241-3/4 blank

BEREGINI BEREGINI BEREGINI

MAINTAINER

GRIP AND GIMBAL ASSEMBLY (FTAXFA) - 12976231

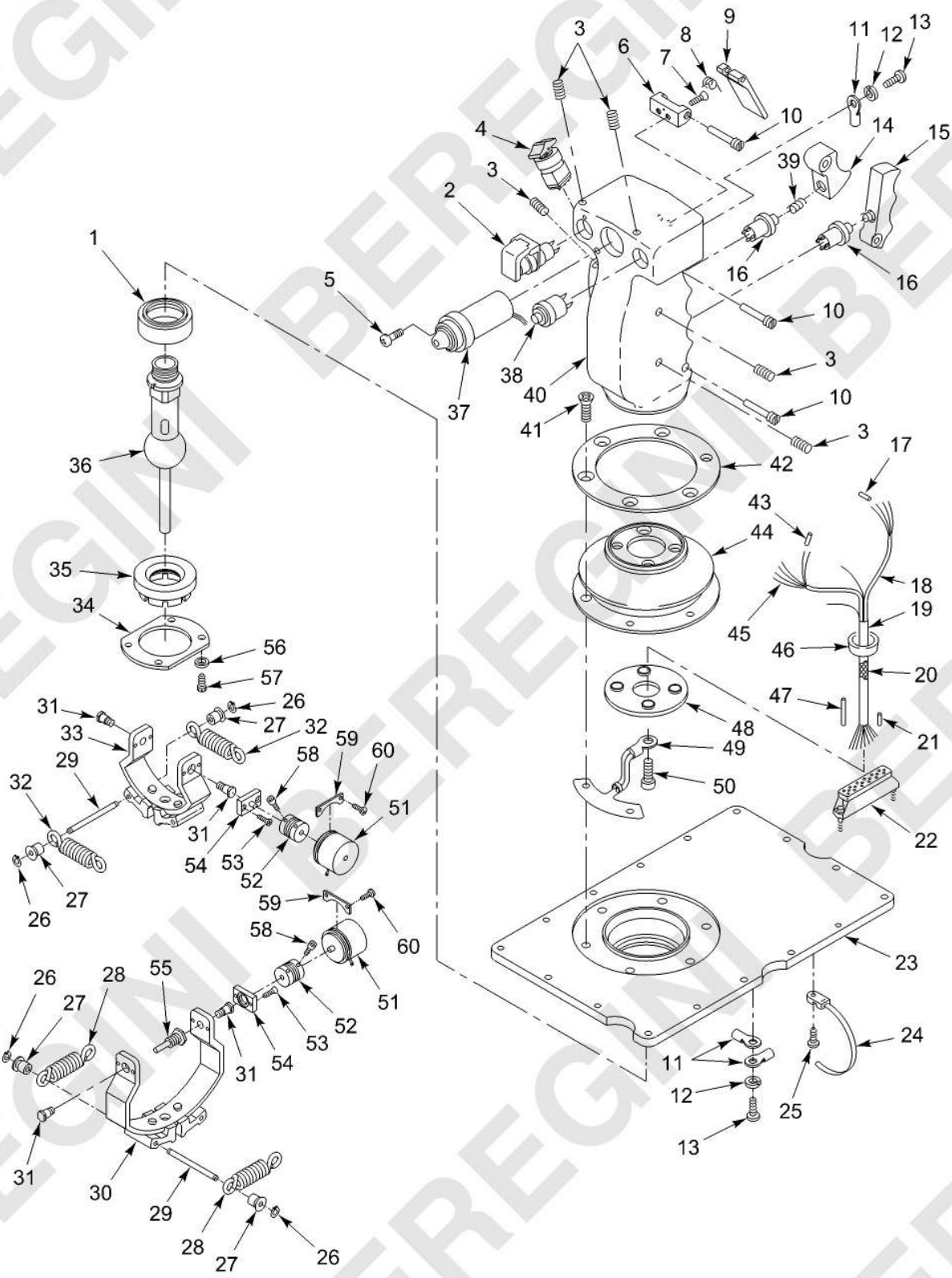

Figure 241. Grip and Gimbal Assembly (FTAXFA) - 12976231

(1) ITEM NO.	(2) SMR CODE	(3) NSN	(4) CAGEC	(5) PART NUMBER	(6) DESCRIPTION AND USABLE ON CODE (UOC)	(7) QTY
					GROUP FTAXFA GRIP AND GIMBAL ASSEMBLY	
					FIGURE 241 Grip and Gimbal Assembly (FTAXFA) - 12976231	
1	XAFZZ		81579	999-284-3	BEARING,BALL,ANNULA	1
2	PAFZZ	5930-01-468-4514	81579	715-039-1	SWITCH,PUSH	1
3	PAFZZ	5305-00-297-4005	88044	AN565DC4H3	SETSCREW	5
4	PAFZZ	5930-01-468-3384	81579	973-0060	SWITCH,TOGGLE	1
5	PAFZZ	5305-00-242-7275	96906	MS51957-15B	SCREW,MACHINE	1
6	PAHZZ	5340-01-467-7565	19200	12976305	BRACKET,MOUNTING	1
7	PAHZZ	5305-00-993-9189	80205	MS24693-C2	SCREW,MACHINE	2
8	PAFZZ	5360-01-468-4267	19200	12976306	SPRING,HELICAL,TORS	1
9	PAFZZ	5930-01-467-6321	81579	501-216-1	GUARD,SWITCH	1
10	PAFZZ	5305-01-240-5955	81579	715-244-1	SETSCREW	3
11	XAHZZ		81349	M7928/4-148	TERMINAL,LUG	3
12	XAHZZ		80205	MS35338-135	WASHER,LOCK	1
13	XAHZZ		96906	MS51957-11	SCREW,MACHINE	2
14	PAFZZ	1005-01-469-0646	81579	715-223-2	TRIGGER ASSEMBLY	1
15	PAFZZ	3040-01-468-5405	81579	715-071-1	LEVER,MANUAL CONTRO	1
16	PAFZZ	5930-01-186-8300	28986	NX307AB1B-00	SWITCH,PUSH	2
17	XAFZZ		81343	M23053/5-103-4	INSULATION SLEEVING	1
18	XAFZZ		81349	M27500-24RC3T09-908	CABLE,SPECIAL PURPO	1
19	XAFZZ		19476	12976270	CABLE ASSEMBLY,POWE	1
20	XAFZZ		58536	AA59569R36T0500	BRAID,WIRE	1
21	XAFZZ		81343	M23053/5-106-4	INSULATION SLEEVING	2
22	XAFZZ		19200	12976275	CONNECTOR,PLUG,ELEC	1
23	XAFZZ		81579	501-021-4	PLATE ASSEMBLY	1
24	PAHZZ	5935-01-332-6726	28520	3550(MNT90)	STRAP,TIEDOWN	3
25	PAFZZ	5305-00-054-5647	96906	MS51957-13	SCREW,MACHINE	3
26	KFFZZ		96906	MS16624-5012	RING,RETAINING PART OF KIT P/N 12976323	8
27	KFFZZ		19200	12976322	BUSHING,SPRING PART OF KIT P/N 12976323	8
28	XAFZZ		19200	12976278	SPRING,HELICAL,EXTE	2
29	XAFZZ		19200	12976310	SHAFT,STRAIGHT	4

(1) ITEM NO.	(2) SMR CODE	(3) NSN	(4) CAGEC	(5) PART NUMBER	(6) DESCRIPTION AND USABLE ON CODE (UOC)	(7) QTY
30	XAFZZ		81579	999-038-3	YOKE ASSEMBLY OUTSI	1
31	XAFZZ		81579	501-277-2	SCREW,SHOULDER	4
32	KFFZZ		19200	12976321	SPRING,HELICAL,EXTE PART OF KIT P/N 12976323	2
33	XAFZZ		81579	999-038-4	YOKE ASSEMBLY,INSID	1
34	XAFZZ		81579	999-247-3	SPACER,PLATE	1
35	XAFZZ		81579	999-284-2	COUPLING,BEARING	1
36	XAFZZ		81579	501-209-5	SHAFT,GIMBAL	1
37	PAFZZ	6695-01-468-4951	19200	12976269	TRANSDUCER,MOTIONAL	1
38	PAFZZ	5930-00-630-2202	96906	MS25089-1A	SWITCH,PUSH	1
39	PAFZZ	5360-01-467-6702	81579	STD405-64	SPRING,HELICAL,COMP	1
40	XAFZZ		81579	715-040-3	GRIP ASSEMBLY,CONTR	1
41	XAFZZ		96906	MS51959-44B	SCREW,MACHINE	6
42	XAFZZ		81579	999-247-2	SPACER,PLATE	1
43	XAFZZ		81343	M23053/5-102-4	INSULATION SLEEVING	12
44	XAFZZ		19200	12976273	BOOT,VEHICULAR COMP	1
45	XAFZZ		81349	M27500-24RC3T09-931	CABLE,SPECIAL PURPO	1
46	XAFZZ		19200	12976276	NUT,PLAIN,ROUND	1
47	XAFZZ		81343	M23053/5-108-4	INSULATION SLEEVING	1
48	XAFZZ		81579	501-021-5	PLATE ASY,GRIP MOUN	1
49	XAFZZ		19200	12976316	TERMINAL STRIP,GROU	1
50	XAFZZ		80205	MS16995-26	SCREW,CAP,SOCKET HE	4
51	PAFZZ	5905-01-467-8650	19200	12976301	RESISTOR,VARIABLE,N	2
52	PAFZZ	3010-01-468-0310	81579	STD835-2	COUPLING,SHAFT,FLEX	2
53	XAFZZ		96906	MS51959-3B	SCREW,MACHINE	4
54	XAFZZ		81579	501-261-1	ADAPTER,BRAKE DRUM	2
55	XAFZZ		81579	501-244-1	PIN,SHOULDER,HEADED	1
56	XAFZZ		96906	MS9321-07	WASHER,FLAT	4
57	XAFZZ		96906	MS24674-2	SCREW,CAP,SOCKET HE	4
58	PAFZZ	5305-01-467-4650	19200	12976315	SCREW,CAP,SOCKET HE	8
59	PAFZZ	5340-01-467-6641	81579	STD902-1	BRACKET,MOUNTING	2
60	PAFZZ	5305-00-494-7334	96906	MS51957-2B	SCREW,MACHINE	4
					END OF FIGURE	

MAINTAINER

INCLINOMETER INSTL (FTAZ) - 9380234

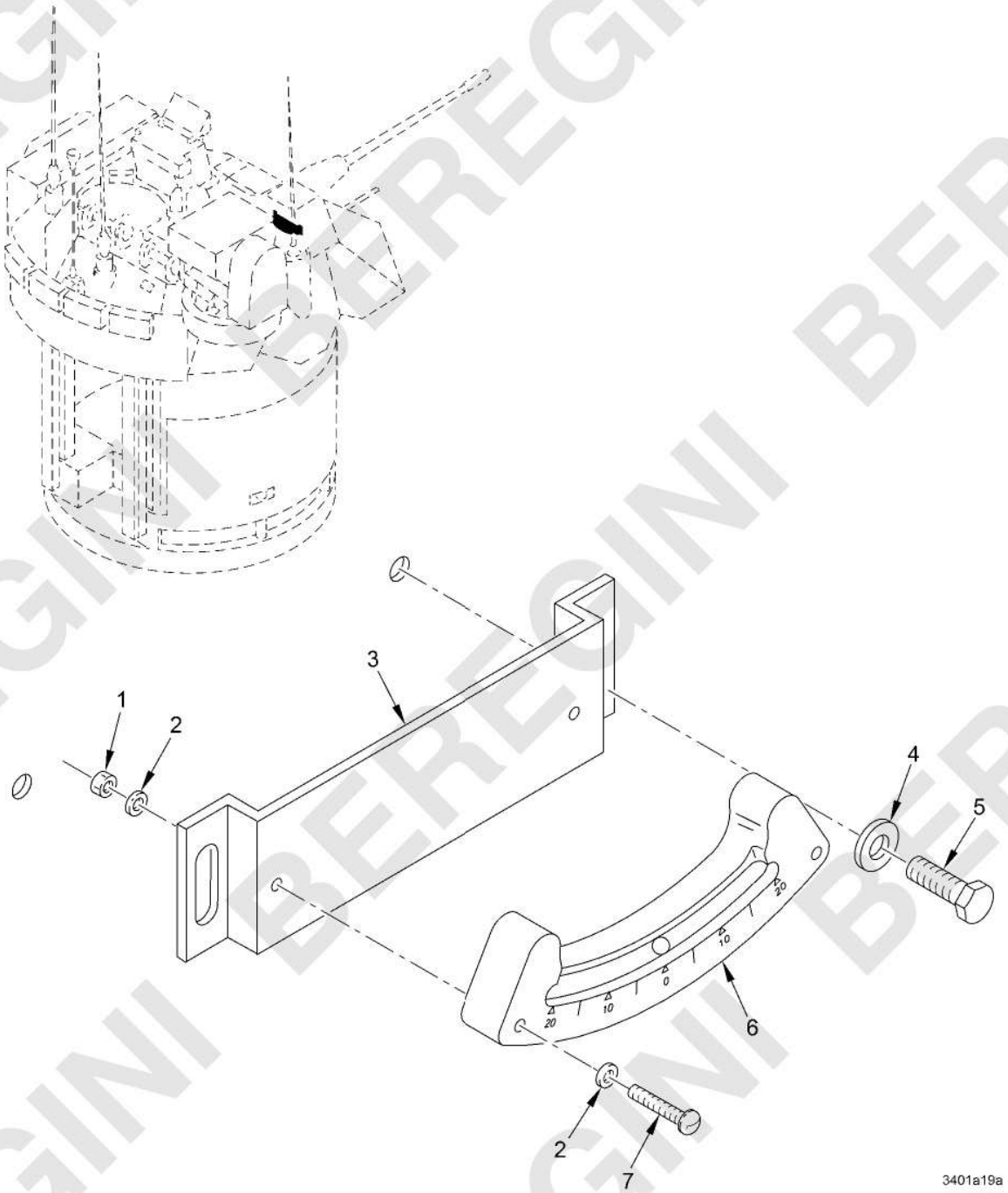

Figure 242. Inclinometer Instl (FTAZ) - 9380234

(1) ITEM NO.	(2) SMR CODE	(3) NSN	(4) CAGEC	(5) PART NUMBER	(6) DESCRIPTION AND USABLE ON CODE (UOC)	(7) QTY
					GROUP FTAZ INCLINOMETER INSTL	
					FIGURE 242 Inclinometer Instl (FTAZ) - 9380234	
1	PAFZZ	5310-00-941-6019	80205	MS21083N08	NUT,SELF-LOCKING,HE	2
2	PAFZZ	5310-01-253-1618	96906	MS51412-18	WASHER,FLAT	4
3	PAFZZ	5340-01-341-4791	19200	9379914	BRACKET,MULTIPLE AN	1
4	PAFZZ	5310-00-209-0027	96906	MS20002-4	WASHER,FLAT	2
5	PAFZZ	5305-00-071-2506	05047	AES01C250500AW9A91	SCREW,CAP,HEXAGON H	2
6	PAFZZ	2590-01-076-4160	19207	12265593	INDICATOR,DRIVERS L	1
7	PAFZZ	5305-00-984-6198	80205	MS35206-250	SCREW,MACHINE	2
					END OF FIGURE	

BEREGINI BEREGINI BEREGINI

MAINTAINER

BACKUP SIGHT INSTL (FTBA) - 12976099

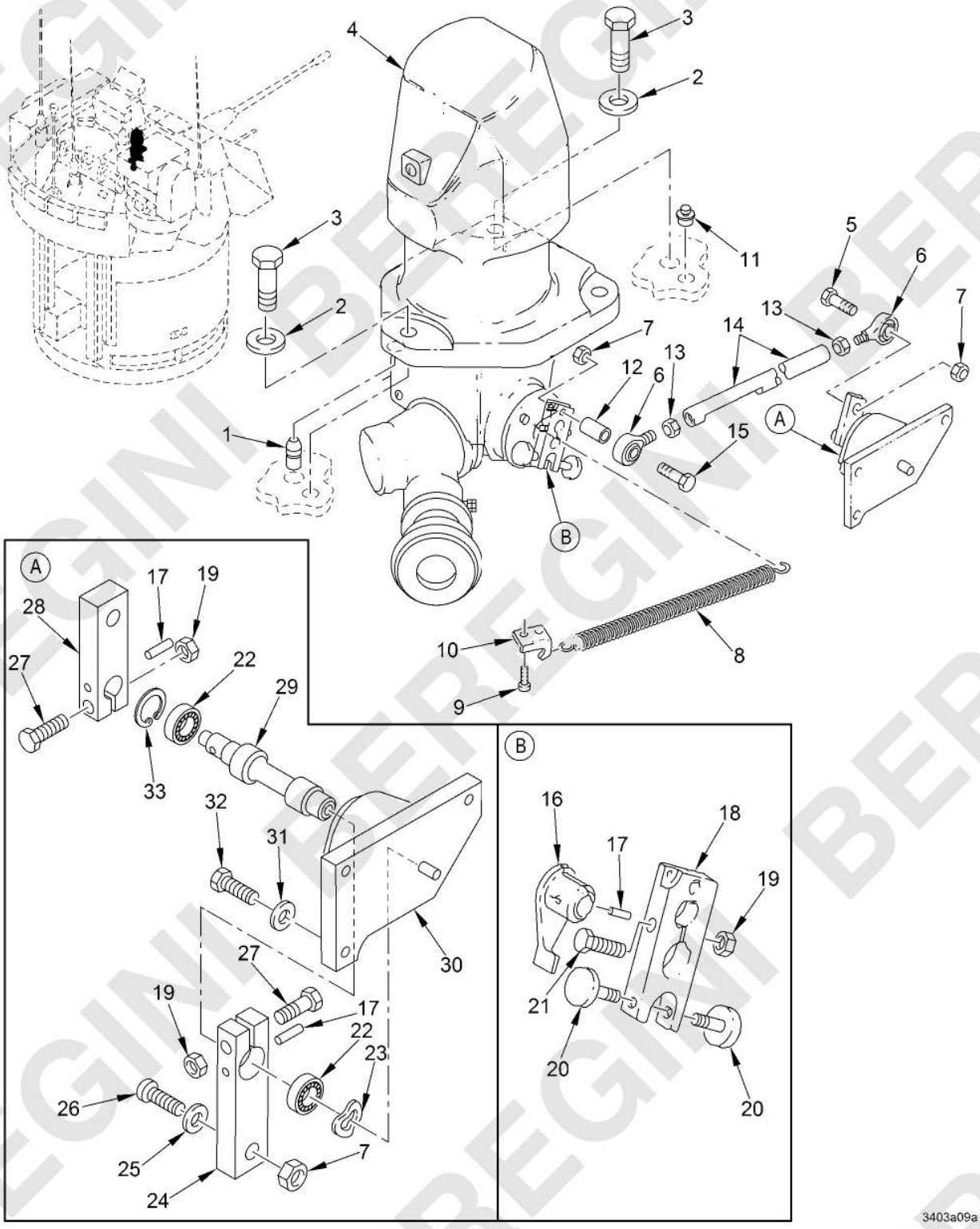

Figure 243. Backup Sight Instl (FTBA) - 12976099

(1) ITEM NO.	(2) SMR CODE	(3) NSN	(4) CAGEC	(5) PART NUMBER	(6) DESCRIPTION AND USABLE ON CODE (UOC)	(7) QTY
					GROUP FTBA BACKUP SIGHT INSTL	
					FIGURE 243 Backup Sight Instl (FTBA) - 12976099	
1	XBDZZ		19200	9380446	PIN,STRAIGHT,HEADLE	1
2	PAFZZ	5310-00-877-5972	19200	10910174-3	WASHER,FLAT	3
3	PAFZZ	5305-00-725-2317	05047	AES01C375A50AW9A91	SCREW,CAP,HEXAGON H	3
4	PAFDD	6650-01-313-8946	19200	9380400	TELESCOPE,AZIMUTH	1
5	PAFZZ	5306-00-727-6788	88044	AN174-11A	BOLT,MACHINE	1
6	PAFZZ	3120-01-178-1323	19207	12323328-2	BEARING,PLAIN,ROD E	2
7	PAFZZ	5310-00-903-8282	80205	MS21083N4	NUT,SELF-LOCKING,HE	3
8	PAFZZ	5360-00-323-3092	96906	MS24586-739	SPRING,HELICAL,EXTE	1
9	PAFZZ	5305-00-988-1723	80205	MS35206-279	SCREW,MACHINE	2
10	PAFZZ	1005-01-149-8300	19207	12316787	HOOK	1
11	XBDZZ		19200	9380447	PIN,STRAIGHT,HEADLE	1
12	PAFZZ	1005-01-149-8298	19207	12316778	RETAINER,GUN COMPON	1
13	PAFZZ	5310-00-853-9335	96906	MS35691-13	NUT,PLAIN,HEXAGON	2
14	PAFZZ	3040-01-457-1059	19200	12976347	CONNECTING LINK,RIG	1
15	PAFZZ	5306-00-182-1799	88044	AN174-17A	BOLT,MACHINE	1
16	PAFZZ	3040-01-149-8297	19207	12316786	HUB,BODY	1
17	PAFZZ	5315-00-814-3530	80205	MS16562-35	PIN,SPRING	3
18	PAFZZ	5340-01-149-8294	19207	12316788	CRANK,HAND	1
19	PAFZZ	5310-00-088-1251	81349	M45913/1-4CG5Z	NUT,SELF-LOCKING,HE	3
20	PAFZZ	5305-01-190-8528	19207	12325529	THUMBSCREW	2
21	PAFZZ	5305-00-225-3841	05047	AES01C250A37AW9A91	SCREW,CAP,HEXAGON H	1
22	PAFZZ	3110-00-108-9178	58536	AA59583-400JEBE	BEARING,BALL,ANNULA	2
23	PAFZZ	5310-00-562-2953	19207	12300202-1	WASHER,SPRING TENSI	1
24	PAFZZ	3040-01-149-8291	19207	12316780	BRACKET,EYE,NONROTA	1
25	PAFZZ	5310-00-865-9513	19207	10910174-1	WASHER,FLAT	1
26	PAFZZ	1005-01-149-8292	80064	2587035-2	CAM,FOLLOWER	1
27	PAFZZ	5305-00-225-3843	80204	B1821BH025C100N	SCREW,CAP,HEXAGON H	2
28	PAFZZ	1005-01-149-8296	19207	12316781	LINK,SLOTTED	1
29	PAFZZ	3040-01-149-8295	19207	12316785	SHAFT,SHOULDERED	1
30	PAFZZ	3040-01-149-8289	19207	12316782	BRACKET,EYE,ROTATIN	1
31	PAFZZ	5310-00-809-4058	96906	MS27183-10	WASHER,FLAT	3

(1) ITEM NO.	(2) SMR CODE	(3) NSN	(4) CAGEC	(5) PART NUMBER	(6) DESCRIPTION AND USABLE ON CODE (UOC)	(7) QTY
32	PAFZZ	5305-00-225-3842	05047	AES01C250A12AW9A91	SCREW,CAP,HEXAGON H	3
33	PAFZZ	5325-00-721-4828	96906	MS16625-1102	RING,RETAINING	1
					END OF FIGURE	

MAINTAINER

TELESCOPE, AZIMUTH (FTBAA) - 9380400

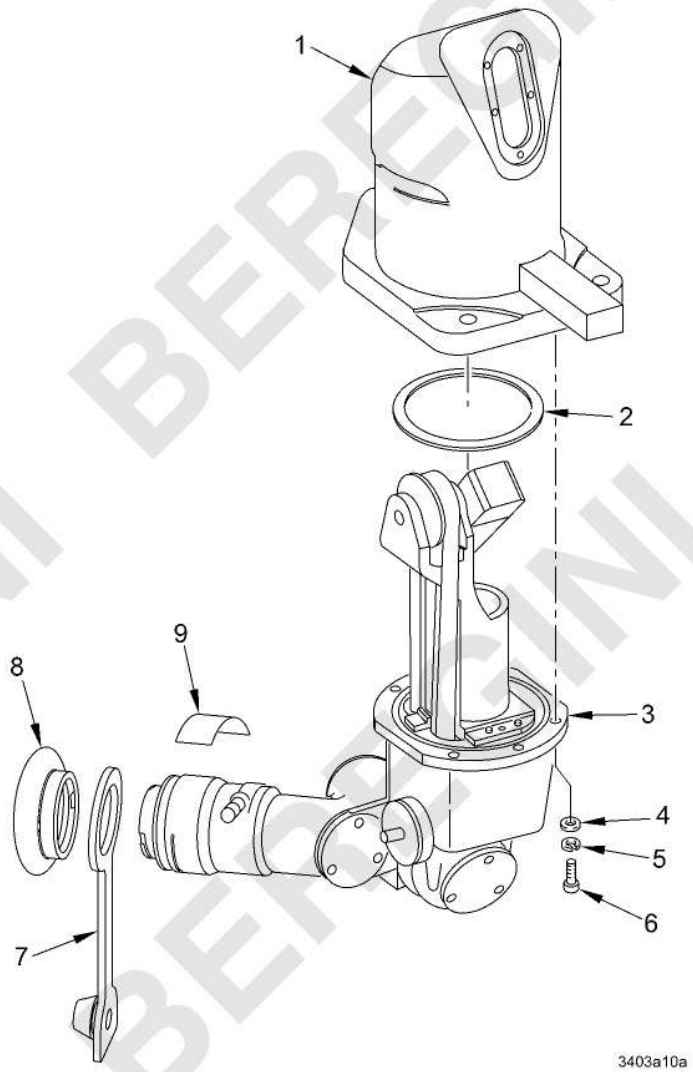

Figure 244. Telescope, Azimuth (FTBAA) - 9380400

(1) ITEM NO.	(2) SMR CODE	(3) NSN	(4) CAGEC	(5) PART NUMBER	(6) DESCRIPTION AND USABLE ON CODE (UOC)	(7) QTY
					GROUP FTBAA AZIMUTH TELESCOPE	
					FIGURE 244 Telescope, Azimuth (FTBAA) - 9380400	
1	XBFFF		19200	9380401	OUTER,HEAD ASSEMBLY SEE FIG. 245 FOR BREAKDOWN.....	1
2	PAFFF	1430-01-571-5812	18876	13620159	MISSILE CONTROL SUB	1
3	XAHHH		19200	9380402	TELESCOPE ASSEMBLY SEE FIG. 246 FOR BREAKDOWN.....	1
4	PAHZZ	5310-00-952-0309	80205	NAS620C416	WASHER,FLAT	3
5	PAHZZ	5310-00-933-8121	80205	MS35338-139	WASHER,LOCK	4
6	PAHZZ	5305-00-992-6063	80205	MS16995-51	SCREW,CAP,SOCKET HE ..... UOC: [redacted]	4
7	PAFZZ	5340-01-434-2291	19200	12950937	PLUG,PROTECTIVE,DUS	1
8	PAFZZ	1440-01-050-4911	18876	10692258	EYE CUP INFLATABLE	1
9	MDDZZ		19200	9380419	PLATE,IDENTIFICATIO MAKE FROM SHEET METAL P/N QQ-A-250/2-H14,0.032X48X144(14153).....	1
					END OF FIGURE	

BEREGINI BEREGINI BEREGINI

MAINTAINER

OUTER HEAD ASSEMBLY (FTBAAA) - 9380401

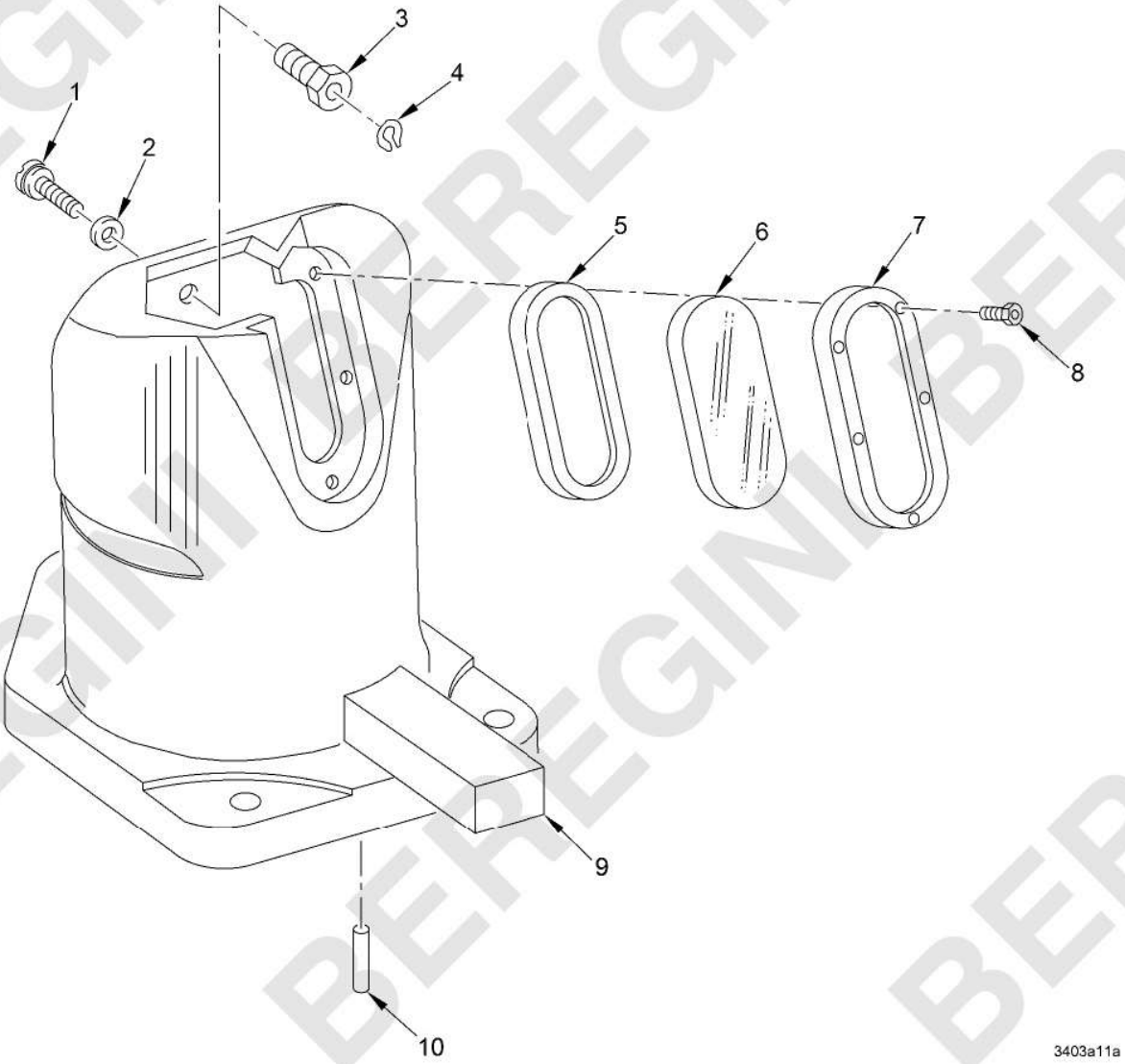

Figure 245. Outer Head Assembly (FTBAAA) - 9380401

(1) ITEM NO.	(2) SMR CODE	(3) NSN	(4) CAGEC	(5) PART NUMBER	(6) DESCRIPTION AND USABLE ON CODE (UOC)	(7) QTY
					GROUP FTBAAA OUTER HEAD ASSEMBLY	
					FIGURE 245 Outer Head Assembly (FTBAAA) - 9380401	
1	PAHZZ	1240-01-073-7507	19207	12266975	VALVE,STEM	1
2	PAHZZ	5331-01-077-3914	19207	12266940-6	O-RING	1
3	PAHZZ	1240-01-073-7508	19207	12266974	VALVE,BODY	1
4	PAHZZ	5325-00-725-0969	96906	MS16633-4018	RING,RETAINING	1
5	PAHZZ	5330-01-079-2992	19200	12279262	SEAL,NONMETALLIC CH	1
6	PAHZZ	1240-01-079-2960	19200	12279236	WINDOW,OPTICAL INST	1
7	PAHZZ	2510-01-220-0693	19207	12279263	FRAME,WINDOW,VEHICU	1
8	PAHZZ	5305-00-959-0382	80205	MS16995-17	SCREW,CAP,SOCKET HE	5
9	XAHZZ		19200	9380418	OUTER HEAD	1
10	PAHZZ	5315-00-809-1442	96906	MS16555-647	PIN,STRAIGHT,HEADLE	1
					END OF FIGURE	

BEREGINI BEREGINI BEREGINI

MAINTAINER

TELESCOPE ASSEMBLY (FTBAAB) - 9380402

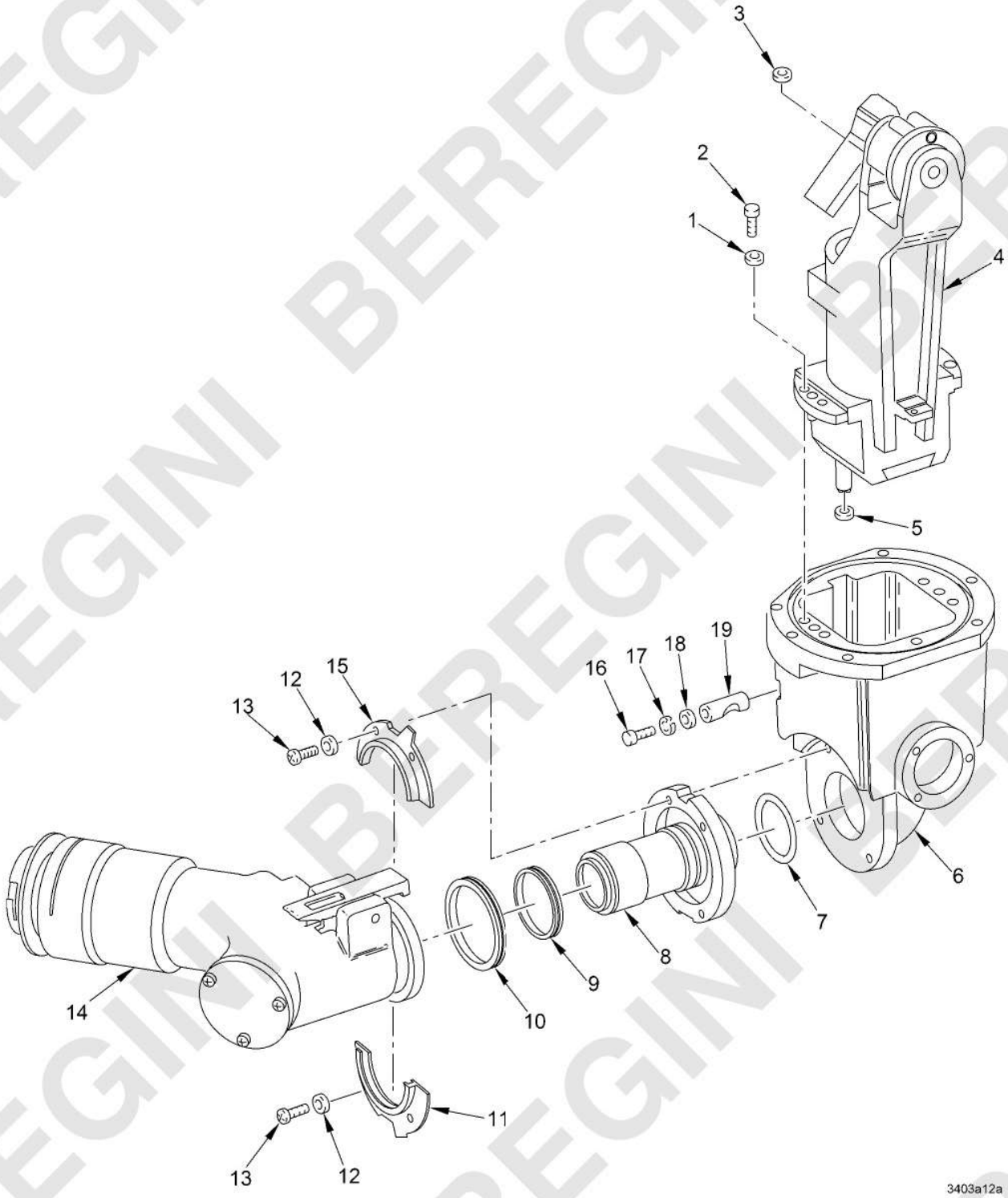

Figure 246. Telescope Assembly (FTBAAB) - 9380402

(1) ITEM NO.	(2) SMR CODE	(3) NSN	(4) CAGEC	(5) PART NUMBER	(6) DESCRIPTION AND USABLE ON CODE (UOC)	(7) QTY
					GROUP FTBAAB TELESCOPE ASSEMBLY	
					FIGURE 246 Telescope Assembly (FTBAAB) - 9380402	
1	PAHZZ	5310-00-933-8120	80205	MS35338-138	WASHER,LOCK	5
2	PAHZZ	5305-00-992-6004	80205	MS16995-38	SCREW,CAP,SOCKET HE	5
3	PAHZZ	5325-00-598-1138	96906	MS16633-4012	RING,RETAINING	1
4	XBFFF		19200	9380404	INNER STRUCTURE	1
5	PAHZZ	5330-01-132-1552	19207	12309663-1	O-RING	1
6	XBFFF		19200	9380411	LOWER HOUSING ASSEM	1
7	PAHZZ	5330-01-132-1553	19207	12309663-3	O-RING	1
8	PAHDD	6650-01-313-8948	19200	9380403	CELL ASSEMBLY,OPTIC	1
9	PAHZZ	5330-01-132-1549	19207	12309694-3	SEAL,PLAIN	1
10	PAHZZ	5330-01-149-8353	19207	12309694-4	SEAL,PLAIN	1
11	PAHZZ	5325-01-130-6275	19207	12309709	RING,RETAINING	1
12	PAHZZ	5310-00-933-8121	80205	MS35338-139	WASHER,LOCK	4
13	PAHZZ	5305-01-202-7534	19207	12309718	SCREW,MACHINE	4
14	XBFFF		19207	12309647	EYEPIECE HOUSING	1
15	PAHZZ	5325-01-129-0842	19207	12309703	RING,RETAINING	1
16	PAHZZ	5305-00-939-9208	96906	MS35275-247	SCREW,MACHINE	1
17	PAHZZ	5310-00-933-8119	80205	MS35338-137	WASHER,LOCK	1
18	PAHZZ	5310-00-225-5328	80205	MS15795-841	WASHER,FLAT	1
19	XBFZZ		19207	12279248-2	CLAMP,PIN	1
					END OF FIGURE	

BEREGINI BEREGINI BEREGINI

MAINTAINER

EYEPIECE HOUSING (FTBAABA) - 12309647

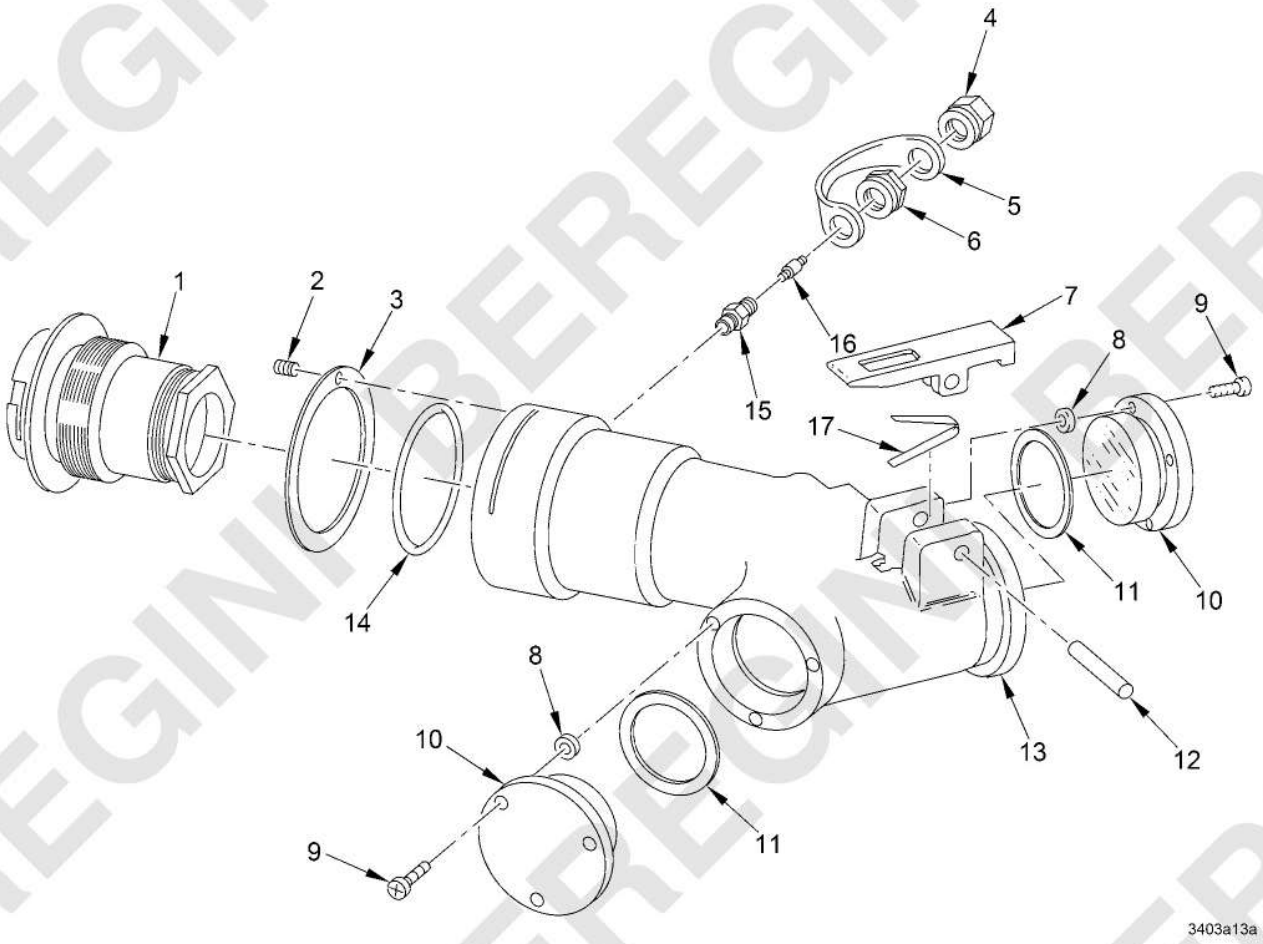

Figure 247. Eyepiece Housing (FTBAABA) - 12309647

(1) ITEM NO.	(2) SMR CODE	(3) NSN	(4) CAGEC	(5) PART NUMBER	(6) DESCRIPTION AND USABLE ON CODE (UOC)	(7) QTY
					GROUP FTBAABA EYEPIECE HOUSING	
					FIGURE 247 Eyepiece Housing (FTBAABA) - 12309647	
1	PAHDD	1240-01-131-0321	19207	12309652	EYEPIECE ASSEMBLY,O	1
2	PAHZZ	5305-01-088-6068	80205	MS51021-113	SETSCREW	1
3	XAHZZ		19207	12309693	SCALE,DIOPTER	1
4	PAHZZ	4820-01-235-0223	19200	8200055	CAP,VALVE	1
5	PAHZZ	5340-00-464-4792	19200	10516567	STRAP,RETAINING	1
6	PAHZZ	5310-00-096-9728	19200	11737597	NUT,PLAIN,HEXAGON	1
7	XBFZZ		19207	12309692	LEVER,LOCK-RELEASE	1
8	PAHZZ	5970-01-131-2221	19207	12309662	INSULATOR,WASHER	6
9	PAHZZ	5305-00-054-6652	96906	MS51957-28	SCREW,MACHINE	6
10	PAHZZ	6650-01-129-0935	19207	12309704	MIRROR,OPTICAL INST	2
11	PAHZZ	5330-01-132-1554	19207	12309663-4	O-RING	2
12	PAHZZ	5315-00-543-3986	96906	MS16555-651	PIN,STRAIGHT,HEADLE	1
13	XBFDD		19207	12309673	HOUSING EYEPIECE	1
14	PAHZZ	5330-01-132-1555	19207	12309663-5	O-RING	1
15	PAHZZ	4820-00-114-1096	96906	MS51607-1	STEM,FLUID VALVE	1
16	PAHZZ	2640-00-050-1229	81348	TYV/CL2/TR C1	VALVE CORE	1
17	PAHZZ	5360-01-131-8222	19207	12309664	SPRING,FLAT	1
					END OF FIGURE	

BEREGINI BEREGINI BEREGINI

MAINTAINER

EYEPIECE ASSEMBLY (FTBAABAA) - 12309652

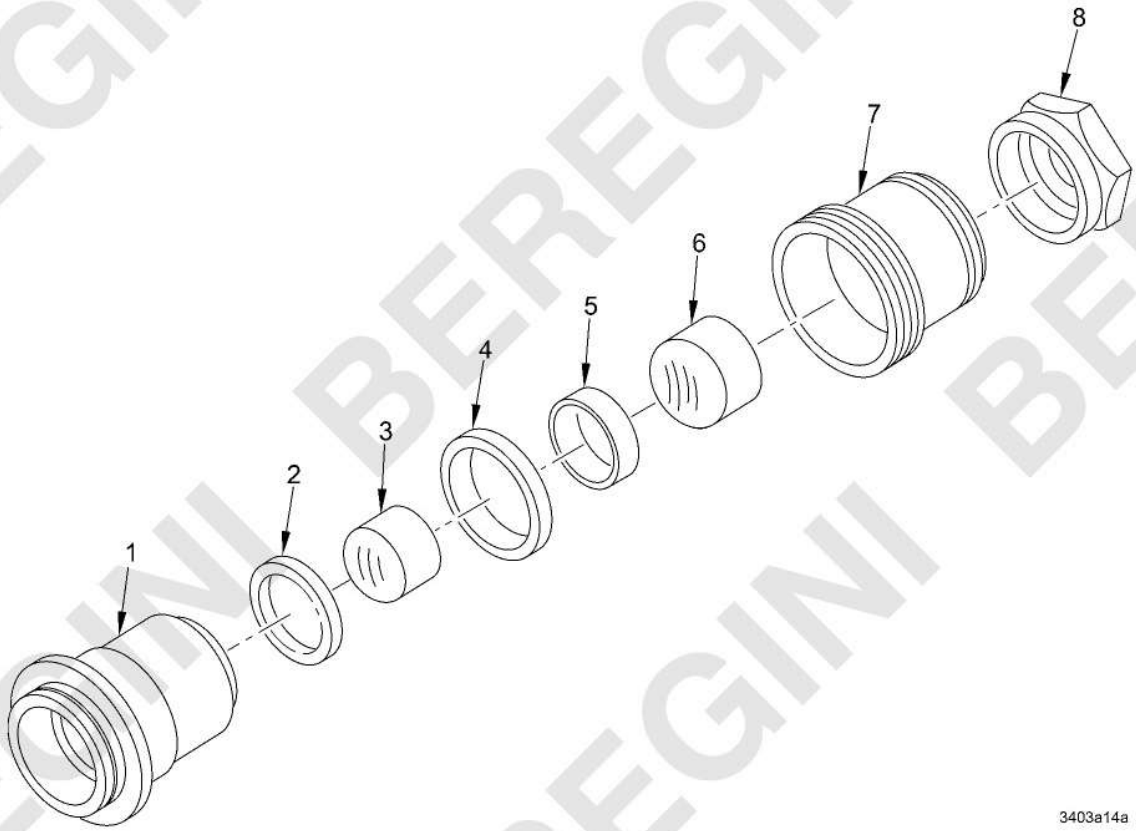

Figure 248. Eyepiece Assembly (FTBAABAA) - 12309652

(1) ITEM NO.	(2) SMR CODE	(3) NSN	(4) CAGEC	(5) PART NUMBER	(6) DESCRIPTION AND USABLE ON CODE (UOC)	(7) QTY
					GROUP FTBAABAA EYEPIECE ASSEMBLY	
					FIGURE 248 Eyepiece Assembly (FTBAABAA) - 12309652	
1	XBDZZ		19207	12266903	CELL,OPTICAL ELEMEN	1
2	PADZZ	5331-01-012-5448	19207	12266940-3	O-RING	1
3	PADZZ	6650-01-080-7648	19207	12266965	LENS,OPTICAL INSTRU	1
4	PADZZ	5330-01-079-3207	19207	12266917	PACKING,PREFORMED	1
5	PADZZ	1240-01-134-8933	19207	12309690	SPACER,OPTICAL ELEM	1
6	PADZZ	6650-01-079-8548	19207	12266966	LENS,OPTICAL INSTRU	1
7	XBDZZ		19207	12309691	SLEEVE	1
8	PADZZ	1240-01-131-5320	19207	12309689	RETAINER,OPTICAL EL	1
					END OF FIGURE	

BEREGINI BEREGINI BEREGINI

MAINTAINER

INNER STRUCTURE (FTBAABB) - 9380404

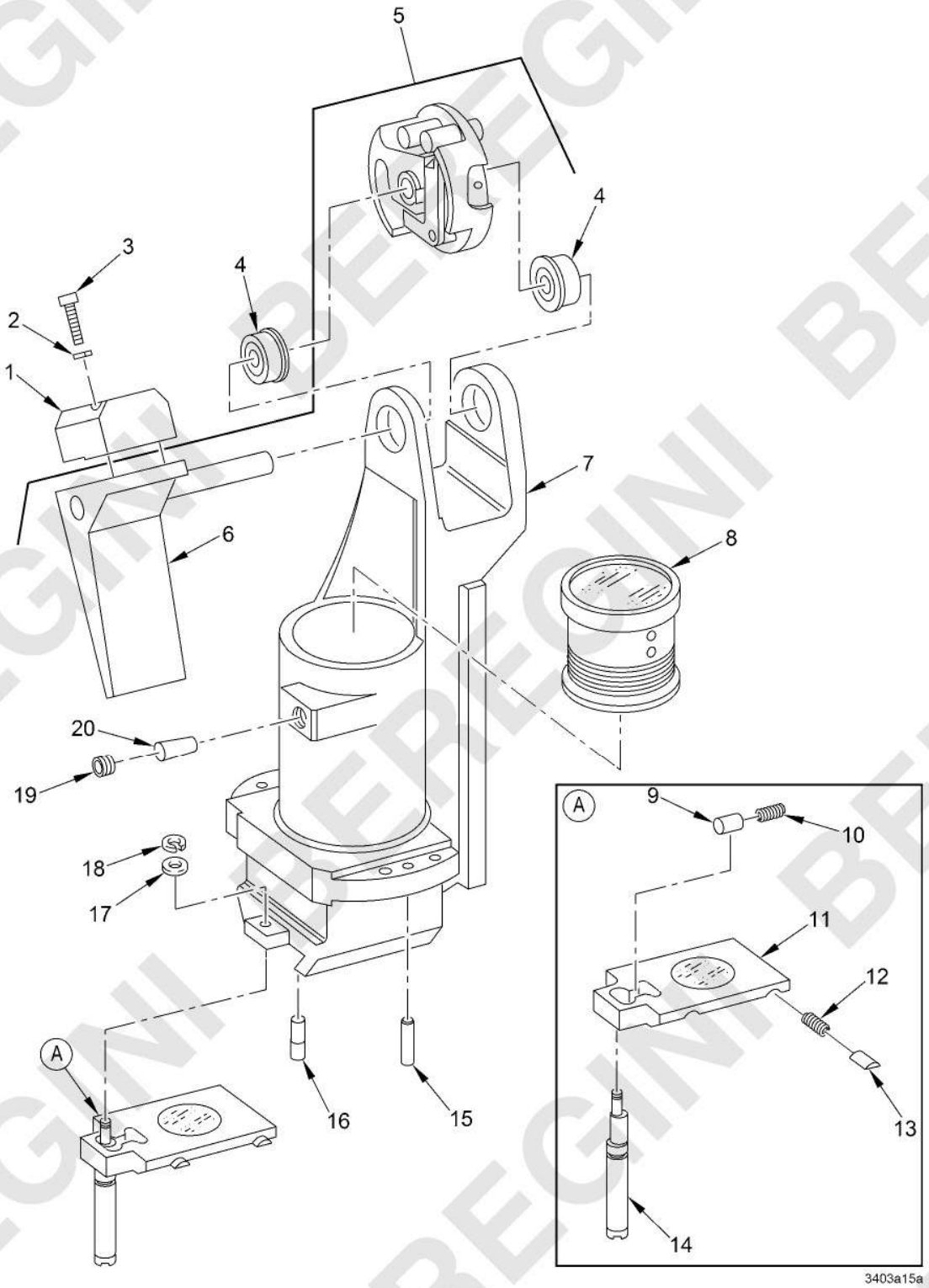

Figure 249. Inner Structure (FTBAABB) - 9380404

(1) ITEM NO.	(2) SMR CODE	(3) NSN	(4) CAGEC	(5) PART NUMBER	(6) DESCRIPTION AND USABLE ON CODE (UOC)	(7) QTY
					GROUP FTBAABB INNER STRUCTURE	
					FIGURE 249 Inner Structure (FTBAABB) - 9380404	
1	PAHZZ	3040-01-216-2735	19207	12309676	WEIGHT,COUNTERBALAN	1
2	PAHZZ	5310-00-929-6395	80205	MS35338-136	WASHER,LOCK	2
3	PAHZZ	5305-00-068-5415	80205	MS16995-20	SCREW,CAP,SOCKET HE	2
4	PAHZZ	3110-01-134-0796	19207	12309685	BEARING,BALL,ANNULA	2
5	PAHZZ	6650-01-313-8947	19200	9380405	MIRROR,OPTICAL INST	1
6	XAHZZ		19200	9380417	.MIRROR ASSEMBLY	1
7	XBFZZ		19207	12309674	INNER STRUCTURE	1
8	PAHDD	6650-01-314-3577	19200	9380410	CELL ASSEMBLY,OPTIC	1
9	PAHZZ	5340-01-129-0861	19207	12309697	PLUNGER,DETENT	1
10	PAHZZ	5360-00-998-5022	96906	MS24585-C22	SPRING,HELICAL,COMP	1
11	PAHZZ	6650-01-313-8949	19200	9380409	RETICLE,OPTICAL INS	1
12	PAHZZ	5360-00-187-9736	96906	MS24585C105	SPRING,HELICAL,COMP	2
13	PAHZZ	5340-01-079-3081	19200	12279267	PLUNGER,DETENT	2
14	PAHZZ	3040-01-216-2716	19207	12309696	SHAFT,SHOULDERED	1
15	PAHZZ	5315-00-056-9386	96906	MS16555-640	PIN,STRAIGHT,HEADLE	1
16	XBFZZ		19207	12266973	PIN,LOCATING	1
17	PAHZZ	5310-00-722-5998	80205	MS15795-805	WASHER,FLAT	1
18	PAHZZ	5325-00-598-1138	96906	MS16633-4012	RING,RETAINING	1
19	PAHZZ	5305-00-724-5381	80205	MS51029-83	SETSCREW	1
20	PAHZZ	5365-01-079-2927	19200	12278975	PLUG,MACHINE THREAD	1
					END OF FIGURE	

BEREGINI BEREGINI BEREGINI

MAINTAINER

CELL ASSEMBLY, OPTIC (FTBAABBB) - 9380410

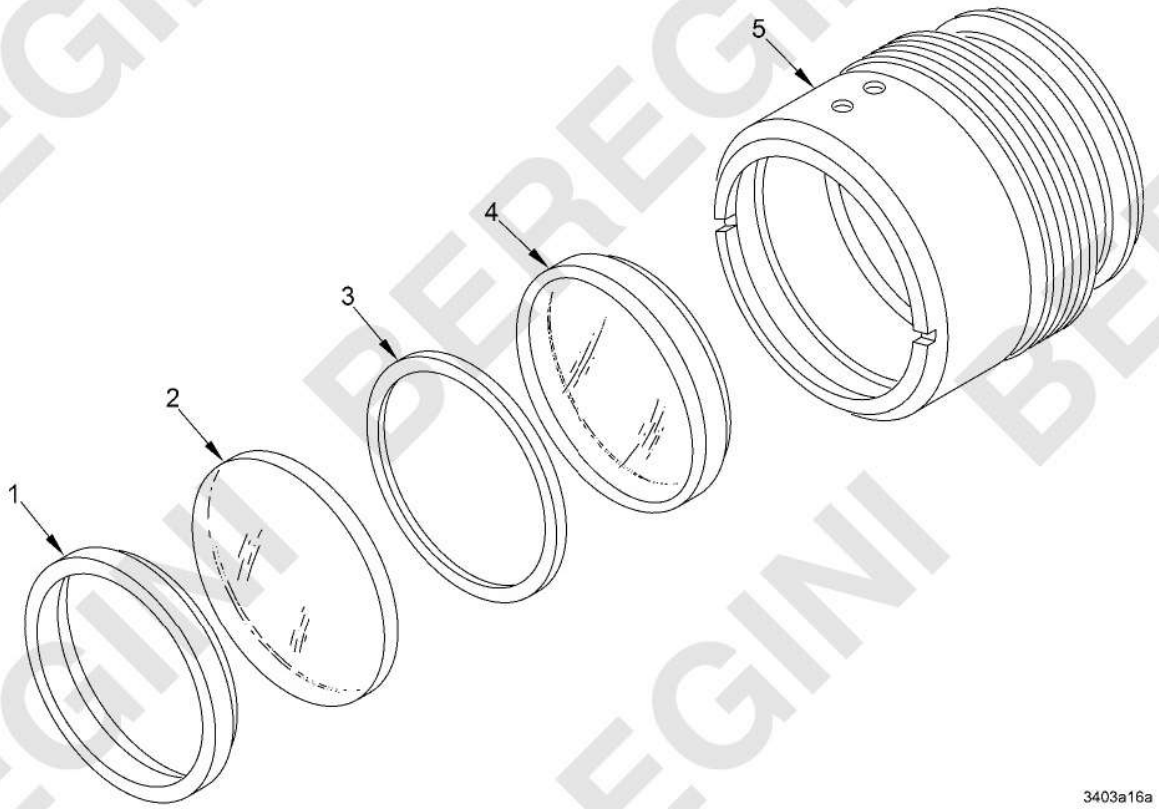

Figure 250. Cell Assembly, Optic (FTBAABBB) - 9380410

(1) ITEM NO.	(2) SMR CODE	(3) NSN	(4) CAGEC	(5) PART NUMBER	(6) DESCRIPTION AND USABLE ON CODE (UOC)	(7) QTY
					GROUP FTBAABBB OPTIC CELL ASSEMBLY	
					FIGURE 250 Cell Assembly, Optic (FTBAABBB) - 9380410	
1	PADZZ	6650-01-314-1789	19200	9380407	FILTER,LIGHT,OPTICA	1
2	PADZZ	6650-01-135-2130	19207	12309665	LENS,OPTICAL INSTRU	1
3	PADZZ	1240-01-129-0999	19207	12309700	SPACER,OPTICAL ELEM	1
4	PADZZ	6650-01-131-2570	19207	12309666	LENS,OPTICAL INSTRU	1
5	XADZZ		19207	12309702	CELL,LENS	1
					END OF FIGURE	

BEREGINI BEREGINI BEREGINI

MAINTAINER

LOWER HOUSING ASSEMBLY (FTBAABC) - 9380411

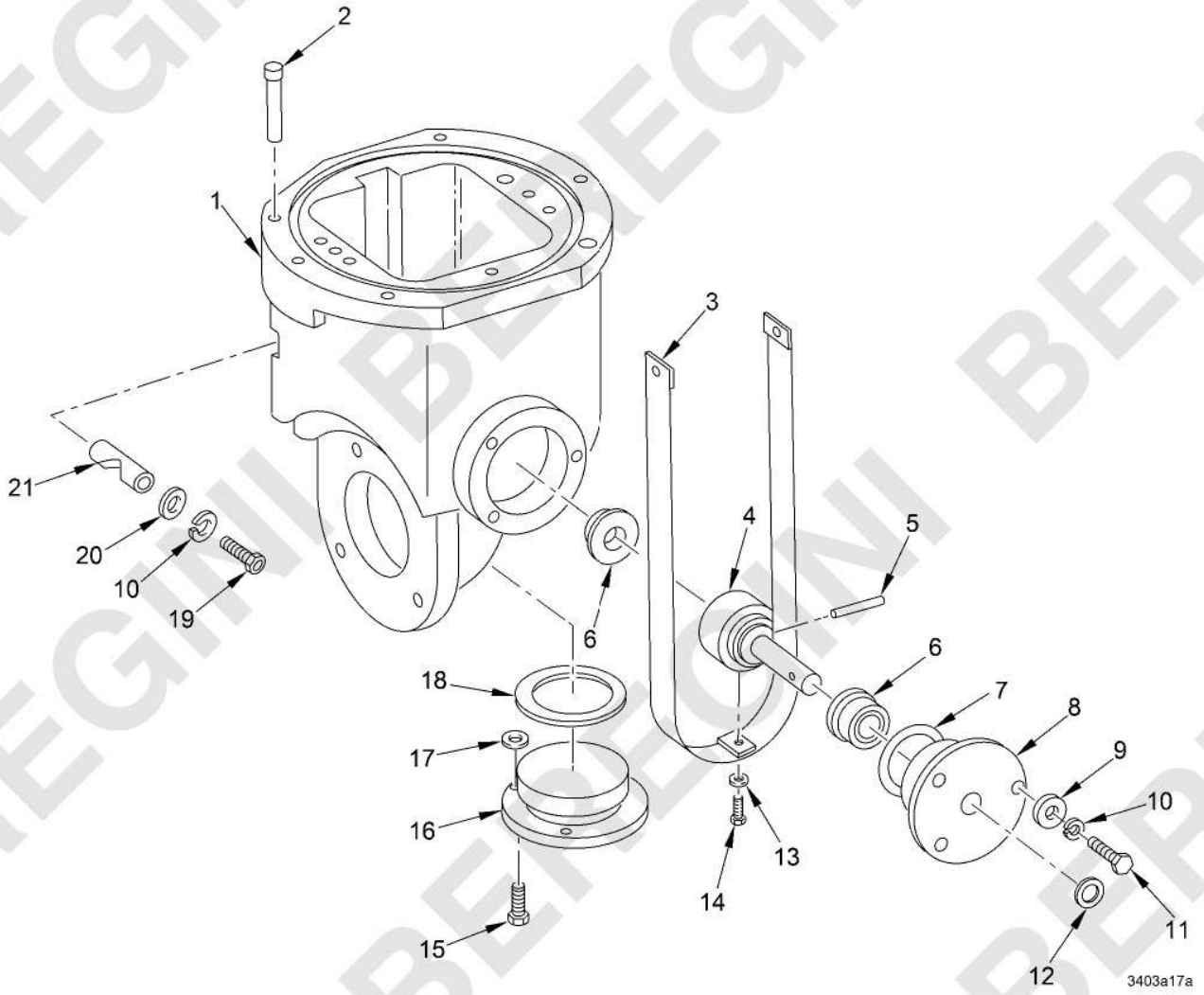

Figure 251. Lower Housing Assembly (FTBAABC) - 9380411

(1) ITEM NO.	(2) SMR CODE	(3) NSN	(4) CAGEC	(5) PART NUMBER	(6) DESCRIPTION AND USABLE ON CODE (UOC)	(7) QTY
					GROUP FTBAABC LOWER HOUSING ASSEMBLY	
					FIGURE 251 Lower Housing Assembly (FTBAABC) - 9380411	
1	XAHZZ		19200	9380416	HOUSING,LOWER	1
2	PAHZZ	3040-01-149-3751	19207	12309708	SHAFT,SHOULDERED	1
3	PAHZZ	1240-01-129-0845	19207	12309675	DRIVE,BAND	1
4	PAHZZ	3040-01-216-2717	19207	12309699	SHAFT,SHOULDERED	1
5	PAHZZ	5315-00-984-6829	96906	MS51923-599	PIN,SPRING	1
6	PAHZZ	3110-01-134-0796	19207	12309685	BEARING,BALL,ANNULA	2
7	PAHZZ	5330-01-132-1556	19207	12309663-2	O-RING	1
8	PAHZZ	3040-01-216-2704	19207	12309698	PLATE,RETAINING,SHA	1
9	PAHZZ	5310-00-054-0041	80205	NAS620C6L	WASHER,FLAT	3
10	PAHZZ	5310-00-929-6395	80205	MS35338-136	WASHER,LOCK	3
11	PAHZZ	5305-00-959-0382	80205	MS16995-17	SCREW,CAP,SOCKET HE	3
12	PAHZZ	5330-01-174-4720	19200	12704126-3	PACKING,PREFORMED	1
13	PAHZZ	5310-00-933-8118	80205	MS35338-135	WASHER,LOCK	1
14	PAHZZ	5305-00-959-0379	80205	MS16995-10	SCREW,CAP,SOCKET HE	1
15	PAHZZ	5305-00-054-6652	96906	MS51957-28	SCREW,MACHINE	3
16	PAHZZ	6650-01-129-0935	19207	12309704	MIRROR,OPTICAL INST	1
17	PAHZZ	5970-01-131-2221	19207	12309662	INSULATOR,WASHER	6
18	PAHZZ	5330-01-132-1554	19207	12309663-4	O-RING	1
19	PAHZZ	5305-00-988-7604	80205	MS16995-28	SCREW,CAP,SOCKET HE	1
20	PAHZZ	5310-00-225-5328	80205	MS15795-841	WASHER,FLAT	1
21	XBFZZ		19207	12279248-2	CLAMP,PIN	1
					END OF FIGURE	

BEREGINI BEREGINI BEREGINI

MAINTAINER

OPTICAL CELL ASSEMBLY (FTBAABD) - 9380403

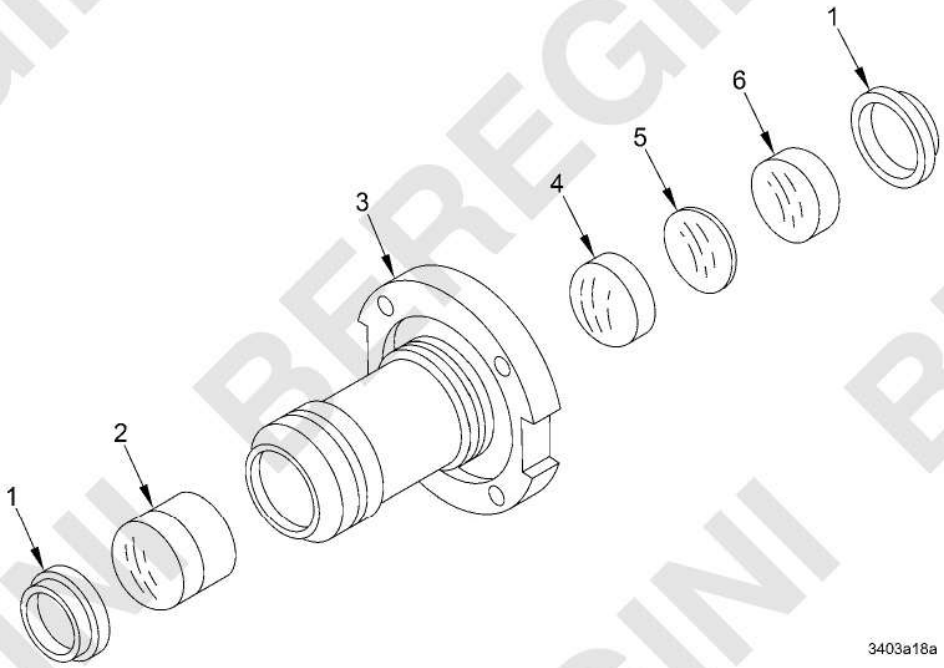

Figure 252. Optical Cell Assembly (FTBAABD) - 9380403

(1) ITEM NO.	(2) SMR CODE	(3) NSN	(4) CAGEC	(5) PART NUMBER	(6) DESCRIPTION AND USABLE ON CODE (UOC)	(7) QTY
					GROUP FTBAABD OPTICAL CELL ASSEMBLY	
					FIGURE 252 Optical Cell Assembly (FTBAABD) - 9380403	
1	PADZZ	1240-01-131-5319	19207	12309688	RETAINER,OPTICAL EL	2
2	PADZZ	6650-01-135-2131	19207	12309669	LENS,OPTICAL INSTRU	1
3	XADZZ		19200	9380415	FLANGE,JOURNAL ASSY	1
4	PADZZ	6650-01-136-5230	19207	12309668	LENS,OPTICAL INSTRU	1
5	PADZZ	1240-01-129-1000	19207	12309686	SPACER,OPTICAL ELEM	1
6	PADZZ	6650-01-136-7597	19207	12309667	LENS,OPTICAL INSTRU	1
					END OF FIGURE	

BEREGINI BEREGINI BEREGINI

MAINTAINER

TOW DRIVE INSTL (FTBB) - 12294599-1

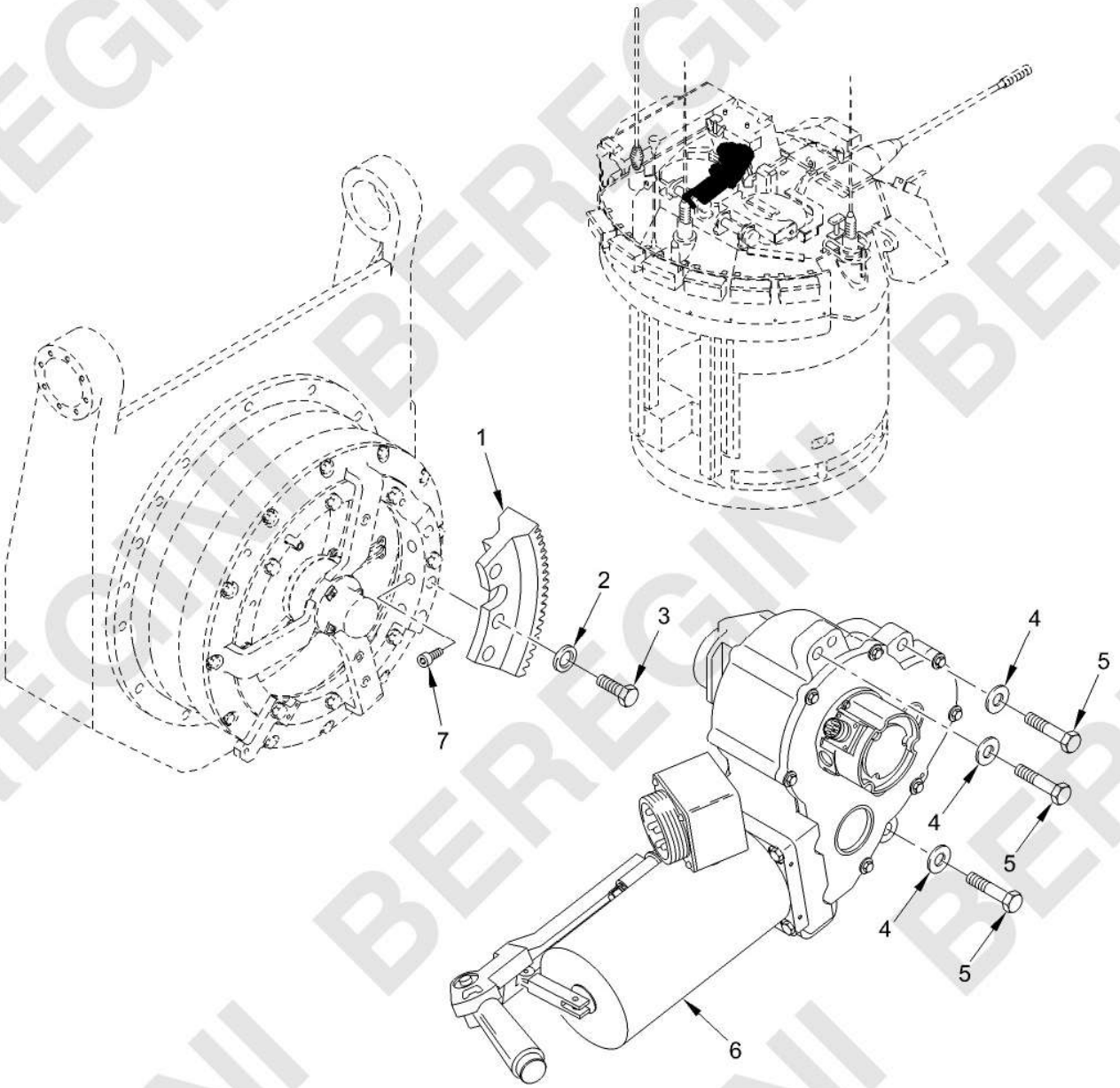

Figure 253. TOW Drive Instl (FTBB) - 12294599-1

(1) ITEM NO.	(2) SMR CODE	(3) NSN	(4) CAGEC	(5) PART NUMBER	(6) DESCRIPTION AND USABLE ON CODE (UOC)	(7) QTY
					GROUP FTBB TOW DRIVE INSTL	
					FIGURE 253 TOW Drive Instl (FTBB) - 12294599-1	
1	PAFZZ	3020-01-613-3686	02978	30800001	GEAR SECTOR,SPUR	1
2	PAFZZ	5310-00-275-9211	80205	MS20002C10	WASHER,RECESSED	3
3	PAFZZ	5305-00-724-7221	05047	AES01C625A75WA6AA1	SCREW,CAP,HEXAGON H	3
4	PAFZZ	5310-00-149-9116	80205	MS20002C8	WASHER,RECESSED	4
5	PAFZZ	5305-00-071-2071	05047	AES02C500B00AW9A81	SCREW,CAP,HEXAGON H	4
6	AFFFF		19207	12292344	ELEVATION DRIVE,TOW SEE FIG. 254 FOR BREAKDOWN.....	1
7	PAFZZ	5305-00-225-7775	80205	MS16996-25	SCREW,CAP,SOCKET HE	3
					END OF FIGURE	

BEREGINI BEREGINI BEREGINI

MAINTAINER

TOW ELEVATION DRIVE (FTBBA) - 12292344

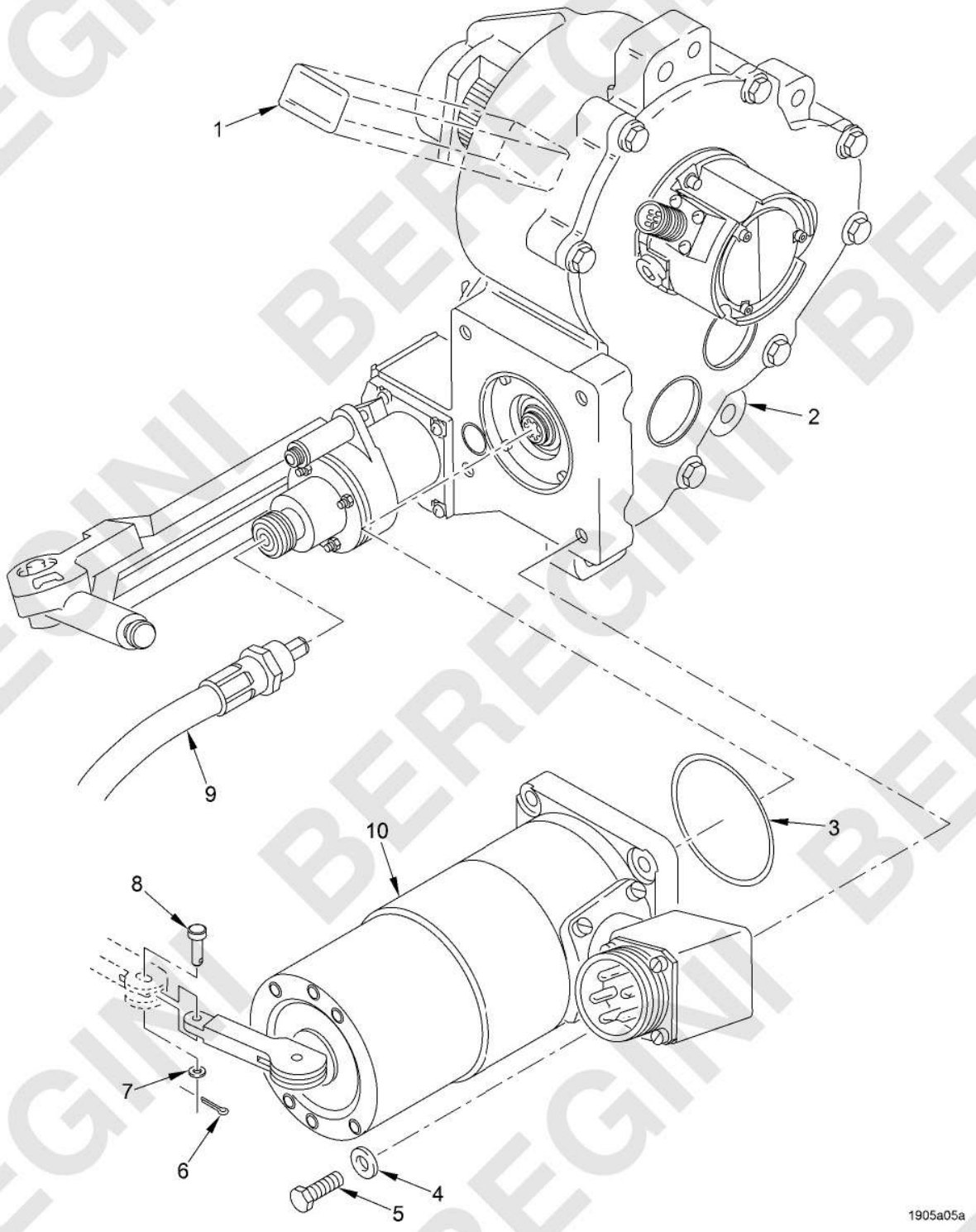

Figure 254. TOW Elevation Drive (FTBBA) - 12292344

(1) ITEM NO.	(2) SMR CODE	(3) NSN	(4) CAGEC	(5) PART NUMBER	(6) DESCRIPTION AND USABLE ON CODE (UOC)	(7) QTY
					GROUP FTBBA TOW ELEVATION DRIVE	
					FIGURE 254 TOW Elevation Drive (FTBBA) - 12292344	
1	MDDZZ		19207	12317181-7	PLATE,IDENTIFICATIO MAKE FROM SHEET METAL P/N QQ-A-250/2-H14,0.032X48X144(14153).....	1
2	PAFHH	3010-01-113-1452	19207	12292590	GEARBOX,TOW ELEVATI SEE FIG. 255 FOR BREAKDOWN.....	1
3	PAFZZ	5331-00-420-7590	81343	MS28775-153	O-RING	1
4	PAFZZ	5310-00-773-7618	80205	MS15795-814	WASHER,FLAT	4
5	PAFZZ	5306-01-119-6763	05047	AEB02C375A50AW9A96	BOLT,MACHINE	4
6	PAFZZ	5315-00-815-1405	80205	MS24665-151	PIN,COTTER	1
7	PAFZZ	5310-00-619-1148	80205	MS15795-808	WASHER,FLAT	1
8	PAFZZ	5315-00-990-1338	80205	MS20392-2C19	PIN,STRAIGHT,HEADED	1
9	PAFZZ	3040-01-126-7838	19207	12292480	SHAFT,DRIVE,FLEXIBL	1
10	XAFKK		19207	12292400-5	MOTOR,DIRECT CURREN	1
10	XAFKK		19207	12292400-1	MOTOR,DIRECT CURREN ALTERNATE FOR 12292400-5.....	1
10	PAFKK	6105-01-111-4892	19207	12292400	MOTOR,DIRECT CURREN	1
					END OF FIGURE	

BEREGINI BEREGINI BEREGINI

MAINTAINER

GEARBOX, TOW ELEVATION (FTBBAB) - 12292590

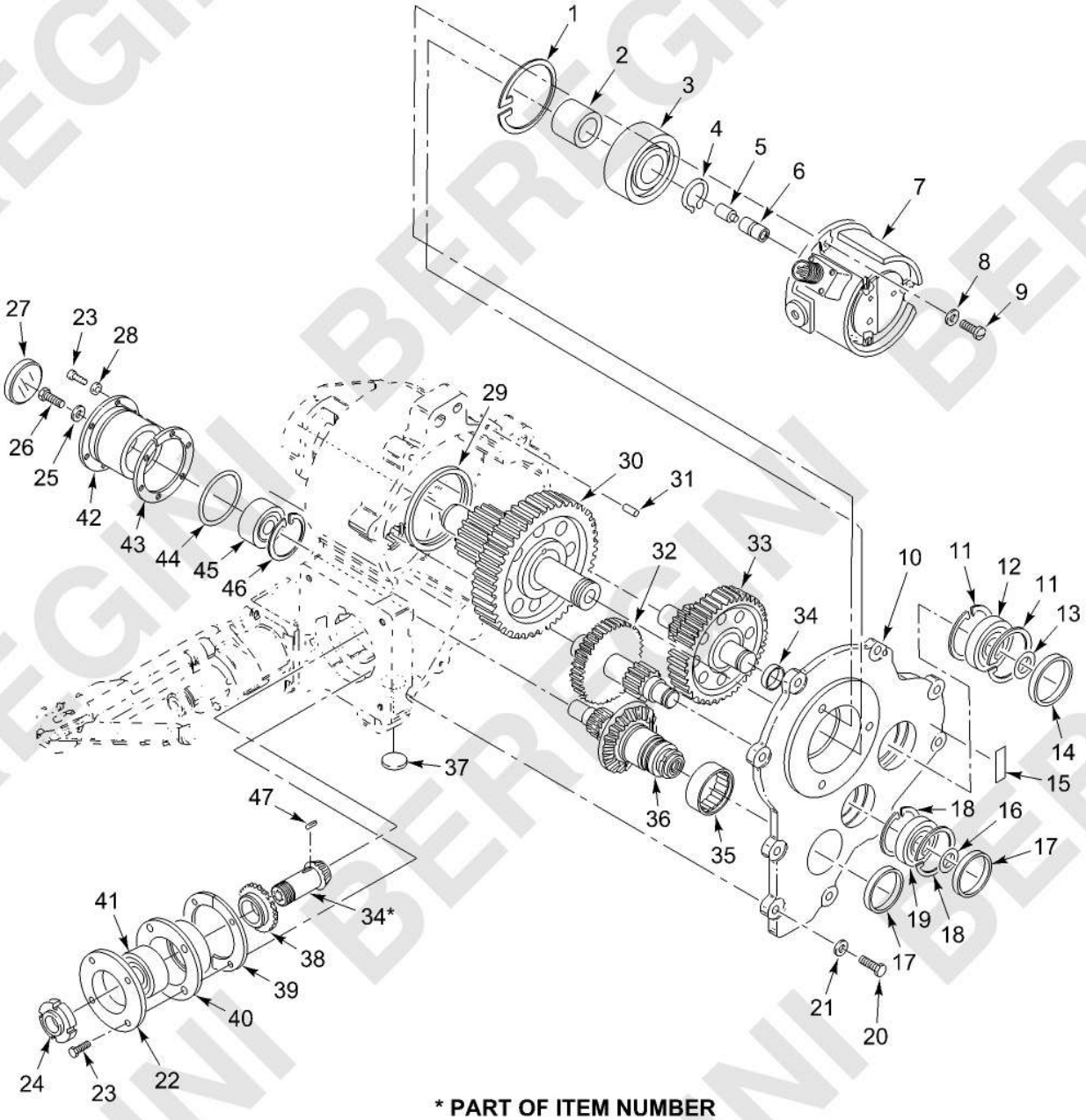

*** PART OF ITEM NUMBER**

Figure 255. Gearbox, TOW Elevation (FTBBAB) - 12292590
(Sheet 1 of 3)

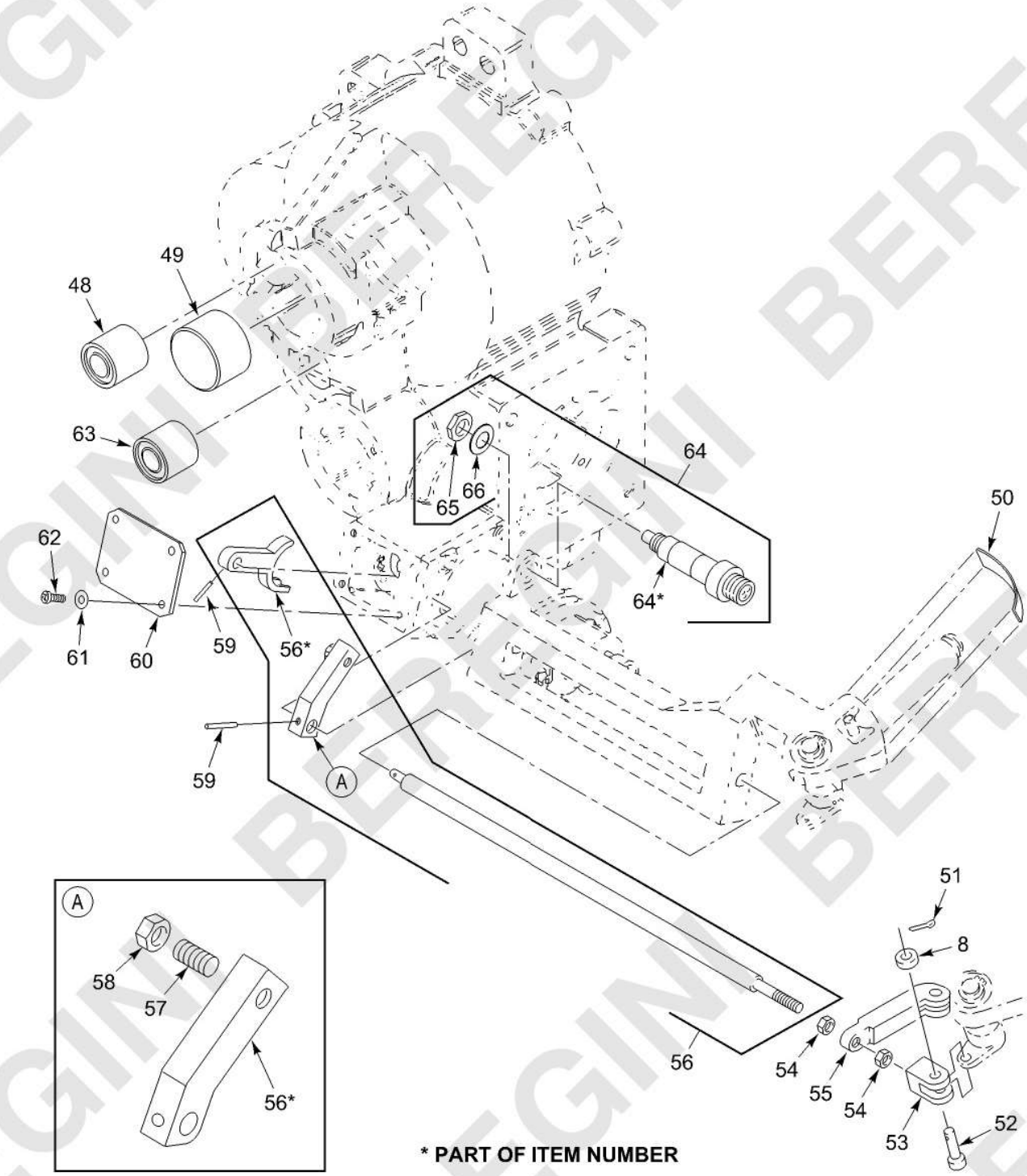

Figure 255. Gearbox, TOW Elevation (FTBBAB) - 12292590
(Sheet 2 of 3)

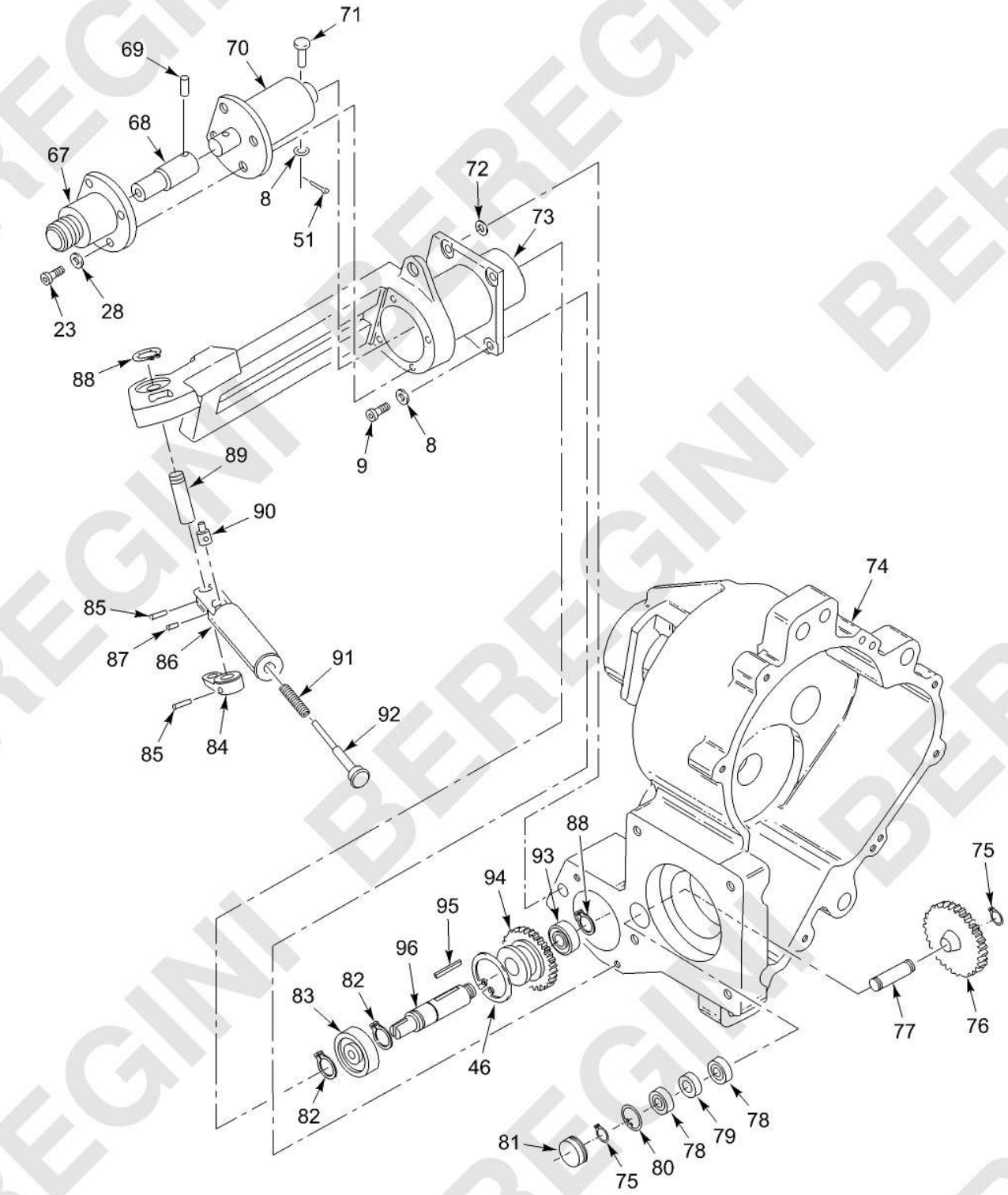

Figure 255. Gearbox, TOW Elevation (FTBBAB) - 12292590
(Sheet 3 of 3)

(1) ITEM NO.	(2) SMR CODE	(3) NSN	(4) CAGEC	(5) PART NUMBER	(6) DESCRIPTION AND USABLE ON CODE (UOC)	(7) QTY
					GROUP FTBBAB TOW ELEVATION GEARBOX	
					FIGURE 255 Gearbox, TOW Elevation (FTBBAB) - 12292590	
1	PAHZZ	5325-00-957-5307	96906	MS16625-4281	RING,RETAINING	1
2	PAHZZ	5365-01-192-4029	19207	12292508-4	SPACER,SLEEVE	1
3	PAHZZ	3110-01-149-5939	19207	12292906-6	BEARING,BALL,ANNULA	1
4	PAHZZ	5325-00-808-0891	96906	MS16624-4137	RING,RETAINING	1
5	PAHZZ	3040-01-110-9873	19207	12292471	SHAFT,SHOULDERED	1
6	PAHZZ	3010-01-110-9941	19207	12292801	COUPLING,SHAFT,FLEX	1
7	PAHHH	5985-01-129-5991	19207	12292615	ATTENUATOR,VARIABLE SEE FIG. 256 FOR BREAKDOWN	1
8	PAFZZ	5310-00-619-1148	80205	MS15795-808	WASHER,FLAT	9
9	PAHZZ	5305-00-545-6646	80205	NAS1351-3LL12	SCREW,CAP,SOCKET HE	7
10	XAHZZ		19207	12292359	COVER,TOW EL DR	1
11	PAHZZ	5325-00-806-4638	96906	MS16625-4206	RING,RETAINING	2
12	PAHZZ	3110-01-139-3313	19207	12292904-6	BEARING,BALL,ANNULA	1
13	PAHZZ	5325-00-807-8151	96906	MS16624-4098	RING,RETAINING	1
14	PAHZZ	5340-01-110-3533	19207	12292845-4	PLUG,EXPANSION	1
15	PADZZ	9905-01-559-6198	19207	12561105-3	PLATE,IDENTIFICATIO	1
16	PAHZZ	5325-00-078-6219	96906	MS16624-4078	RING,RETAINING	1
17	PAHZZ	5340-01-110-9956	19207	12292845-3	PLUG,EXPANSION	2
18	PAHZZ	5325-00-663-2412	96906	MS16625-4185	RING,RETAINING	2
19	PAHZZ	3110-01-147-6006	19207	12292904-5	BEARING,BALL,ANNULA	1
20	PAHZZ	5306-01-119-9321	05047	AEB02C250A00AW9A96	BOLT,MACHINE	9
21	PAHZZ	5310-00-582-5677	80205	MS15795-810	WASHER,FLAT	9
22	PAHZZ	3110-01-112-8008	19207	12292433	RETAINER,BALL,BEARI	1
23	PAHZZ	5305-00-528-5147	80205	NAS1352-08LL12P	SCREW,CAP,SOCKET HE	14
24	PAHZZ	5310-01-206-0792	19207	12292784-4	NUT,SELF-LOCKING,RO	1
25	PAHZZ	5310-01-112-6118	19207	12292520	WASHER,FLAT	1
26	PAHZZ	5305-00-182-9379	80205	NAS1352-4LE12P	SCREW,CAP,SOCKET HE	1
27	PAHZZ	5340-01-109-4783	19207	12292845-2	PLUG,EXPANSION	1
28	PAHZZ	5310-00-880-5978	80205	MS15795-807	WASHER,FLAT	10
29	PAHZZ	5330-01-111-4510	19207	12292835-2	SEAL,PLAIN ENCASED	1
30	PAFZZ	3040-01-109-6954	19207	12317184	GEARSHAFT,SPUR	1

(1) ITEM NO.	(2) SMR CODE	(3) NSN	(4) CAGEC	(5) PART NUMBER	(6) DESCRIPTION AND USABLE ON CODE (UOC)	(7) QTY
31	PAHZZ	5315-00-822-0689	96906	MS16555-46	PIN,STRAIGHT,HEADLE	2
32	PAHZZ	3040-01-095-1022	19207	12292370	GEARSHAFT,SPUR	1
33	PAHZZ	3040-01-108-4963	19207	12292406	GEARSHAFT,SPUR	1
34	PAHZZ	5365-01-117-9880	19207	12292508-2	SPACER,SLEEVE	1
35	PAHZZ	3110-01-110-9813	19207	12292833-1	BEARING,ROLLER,NEED	1
36	PAHZZ	1005-01-145-9278	19207	12292924	SLIP CLUTCH ASSEMBL	1
37	PAHZZ	5340-01-110-9957	19207	12292845-1	PLUG,EXPANSION	1
38	PAHZZ	3020-01-095-3596	19207	12292372	GEAR,SPUR	1
39	PAHZZ	5365-01-091-5750	19207	12292477	SPACER,RING	1
40	PAHZZ	3110-01-111-5583	19207	12292432	RETAINER,BALL,BEARI	1
41	PAHZZ	3110-01-151-6534	19207	12292906-3	BEARING,BALL,ANNULA	1
42	PAHZZ	3110-01-095-8788	19207	12292443	COLLAR,BEARING	1
43	PAHZZ	5365-01-102-9884	19207	12292483	SHIM	2
44	PCHZZ	5331-00-802-2130	81343	MS28775-133	O-RING	1
45	PAHZZ	3110-01-149-5937	19207	12292906-2	BEARING,BALL,ANNULA	1
46	PAHZZ	5325-00-806-0204	96906	MS16625-4156	RING,RETAINING	2
47	PAHZZ	5315-00-781-4529	96906	MS20066-98	KEY,MACHINE	1
48	PAHZZ	3110-01-147-2811	19207	12292876-6	BEARING,ROLLER,NEED	1
49	PAHZZ	3110-01-115-1989	19207	12292832-2	BEARING,ROLLER,NEED	1
50	PAHZZ	9905-01-112-3911	19207	12292531	PLATE,INSTRUCTION	1
51	PAFZZ	5315-00-815-1405	80205	MS24665-151	PIN,COTTER	2
52	PAFZZ	5315-00-990-1338	80205	MS20392-2C19	PIN,STRAIGHT,HEADED	1
53	PAFZZ	5340-01-112-8198	19207	12292421	CLEVIS,ROD END	1
54	PAFZZ	5310-00-840-5785	96906	MS35691-7	NUT,PLAIN,HEXAGON	2
55	PAFZZ	3040-01-109-4776	19207	12292425	CONNECTING LINK,RIG	1
56	KFHZZ		19200	12900565	SHIFT ROD ASSY PART OF KIT P/N 12561065	1
57	KFHZZ		80205	MS51966-130	SETSCREW PART OF KIT P/N 12561065	1
58	KFHZZ		96906	MS35691-5	NUT,PLAIN,HEXAGON PART OF KIT P/N 12561065	1
59	KFHZZ		80205	MS16562-223	PIN,SPRING PART OF KIT P/N 12561065	2
60	PAHZZ	5340-01-112-1602	19207	12292514	COVER,ACCESS	1
61	PAHZZ	5310-00-722-5998	80205	MS15795-805	WASHER,FLAT	4
62	PAHZZ	5305-00-486-1187	96906	MS21090-0624	SCREW,CAP,SOCKET HE	4

(1) ITEM NO.	(2) SMR CODE	(3) NSN	(4) CAGEC	(5) PART NUMBER	(6) DESCRIPTION AND USABLE ON CODE (UOC)	(7) QTY
63	PAHZZ	3110-01-147-2810	19207	12292876-5	BEARING,ROLLER,NEED	1
64	PAFZZ	1005-01-095-5203	19200	12292794-1	SWITCH	1
65	PAFZZ	5310-01-139-1427	96906	MS21340-04	.NUT,PLAIN,HEXAGON	1
66	PAFZZ	5310-01-078-9699	80205	MS35333-136	.WASHER,LOCK	1
67	PAHZZ	4730-01-095-8786	19207	12292412	ADAPTER,STRAIGHT,FL	1
68	PAHZZ	3040-01-110-5477	19207	12292451	SHAFT,SHOULDERED	1
69	PAHZZ	5315-00-058-9782	80205	MS16562-236	PIN,SPRING	2
70	PAHZZ	3010-01-098-7400	19207	12292783	CLUTCH ASSEMBLY,FRI	1
71	PAHZZ	5315-00-080-1941	96906	MS20392-2C27	PIN,STRAIGHT,HEADED	1
72	PCHZZ	5331-01-046-3300	81343	M83461/1-012	O-RING	1
73	PAHZZ	1005-01-111-5727	19207	12292418	HOUSING,ELEVATION D	1
74	XAHZZ		19207	12292353	HOUSING,TOW EL DR	1
75	PAHZZ	5325-00-282-7120	96906	MS16624-4037	RING,RETAINING	2
76	PAHZZ	3020-01-095-2362	19207	12292373	GEAR,SPUR	1
77	PAHZZ	3040-01-101-3979	19207	12292447	SHAFT,STRAIGHT	1
78	PAHZZ	3110-01-149-5933	19207	12292905-1	BEARING,BALL,ANNULA	2
79	PAHZZ	5365-01-115-1104	19207	12292508-3	SPACER,SLEEVE	1
80	PAHZZ	5325-00-807-5335	96906	MS16625-4087	RING,RETAINING	1
81	PAHZZ	5340-01-310-2530	19200	9379463	PLUG,PROTECTIVE,DUS	1
82	PAHZZ	5325-00-634-7446	96906	MS16624-4066	RING,RETAINING	2
83	PAHZZ	3110-01-147-6005	19207	12292904-3	BEARING,BALL,ANNULA	1
84	PAFZZ	3040-01-112-6381	19207	12292428	CONNECTING LINK,RIG	1
85	PAFZZ	5315-00-058-9767	80205	MS16562-231	PIN,SPRING	2
86	PAHZZ	5340-01-097-4871	19207	12292411	LEVER,MANUAL CONTRO	1
87	PAHZZ	5315-00-614-3586	80205	MS16562-212	PIN,SPRING	1
88	PAHZZ	5325-00-804-7645	96906	MS16624-4050	RING,RETAINING	2
89	PAHZZ	5315-01-102-8571	19207	12292515	PIN,GROOVED,HEADLES	1
90	PAHZZ	5315-01-101-1761	19207	12292502	PIN,SHOULDER,HEADLE	1
91	PAHZZ	5360-01-110-5687	10001	3203133P16	SPRING,HELICAL,COMP	1
92	PAHZZ	5315-01-118-2598	19200	12292493	PIN,SHOULDER,HEADED	1
93	PAHZZ	3110-01-198-3895	19207	12292905-2	BEARING,BALL,AIRFRA	1
94	PAHZZ	3020-01-095-9177	19207	12292374	GEAR,SPUR	1
95	PAHZZ	5315-00-730-4456	96906	MS20066-103	KEY,MACHINE	1
96	PAHZZ	3040-01-111-4741	19207	12292448	SHAFT,SHOULDERED	1

(1) ITEM NO.	(2) SMR CODE	(3) NSN	(4) CAGEC	(5) PART NUMBER	(6) DESCRIPTION AND USABLE ON CODE (UOC)	(7) QTY
					END OF FIGURE	

MAINTAINER

ATTENUATOR, VARIABLE (FTBBABA) - 12292615

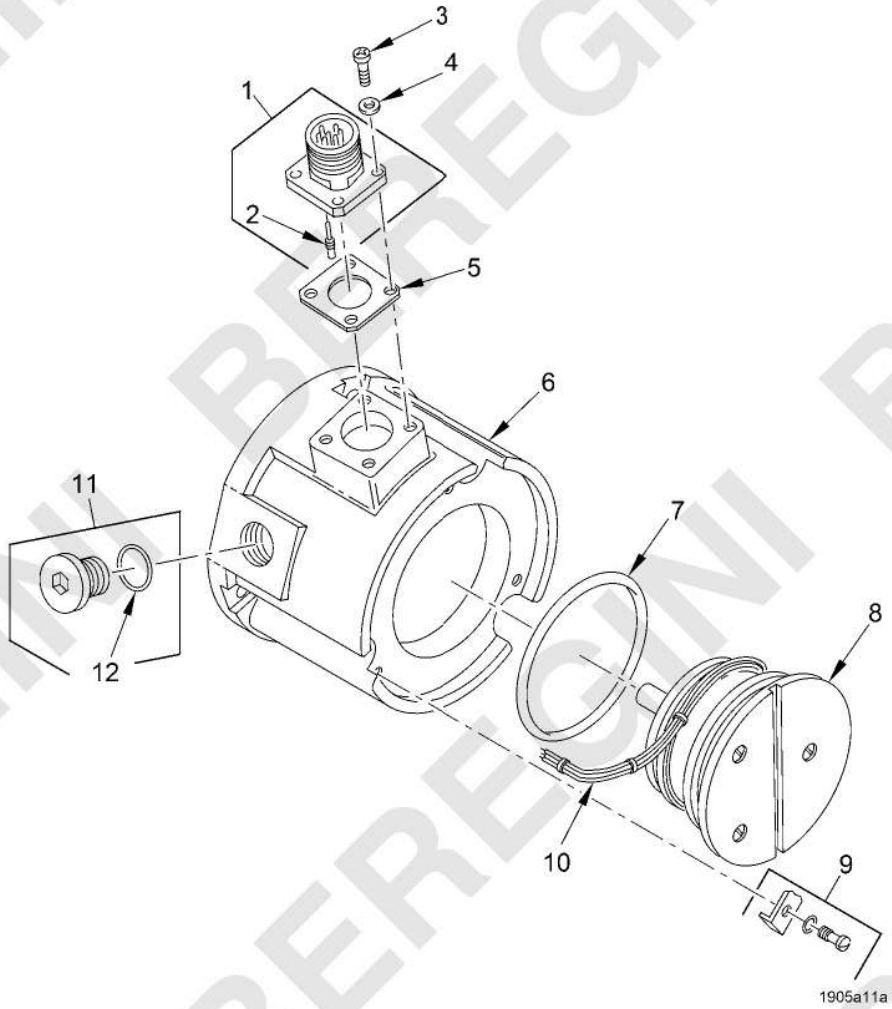

Figure 256. Attenuator, Variable (FTBBABA) - 12292615

(1) ITEM NO.	(2) SMR CODE	(3) NSN	(4) CAGEC	(5) PART NUMBER	(6) DESCRIPTION AND USABLE ON CODE (UOC)	(7) QTY
					GROUP FTBBABA VARIABLE ATTENUATOR	
					FIGURE 256 Attenuator, Variable (FTBBABA) - 12292615	
1	PAHZZ	5935-01-118-5731	19207	12292860-27	CONNECTOR,RECEPTACL J3	1
2	PAHZZ	5999-00-243-6500	81343	AS39029/58-363	.CONTACT,ELECTRICAL	3
3	PAHZZ	5305-00-726-1241	96906	MS21090-0412	SCREW,CAP,SOCKET HE	4
4	PAHZZ	5310-00-595-6211	80205	MS15795-803	WASHER,FLAT	4
5	PAHZZ	5999-01-115-3255	19207	12292796-1	SHIELDING GASKET,EL	1
6	PAHZZ	1005-01-111-5724	19207	12292403	HOUSING,POTENTIOMET	1
7	PCHZZ	5331-00-003-6690	81343	MS28775-137	O-RING	1
8	PAHZZ	5905-01-357-7000	19200	9379467	RESISTOR,VARIABLE,N R1	1
9	PAHZZ	5340-00-872-0889	96906	MS17183-3	CLAMP,SYNCHRO	1
10	MHHZZ		81343	M22759/11-24-9	WIRE,ELECTRICAL MAKE FROM WIRE P/N M22759/11-24-9 (81349)	1
11	PAHZZ	5365-01-117-5208	19207	11627748-6	PLUG,MACHINE THREAD	1
12	PCHZZ	5331-00-808-0794	81343	MS28778-8	.O-RING	1
					END OF FIGURE	

BEREGINI BEREGINI BEREGINI

MAINTAINER

POS SENSOR SYSTEM INSTL (FTBC) - 12976042-1

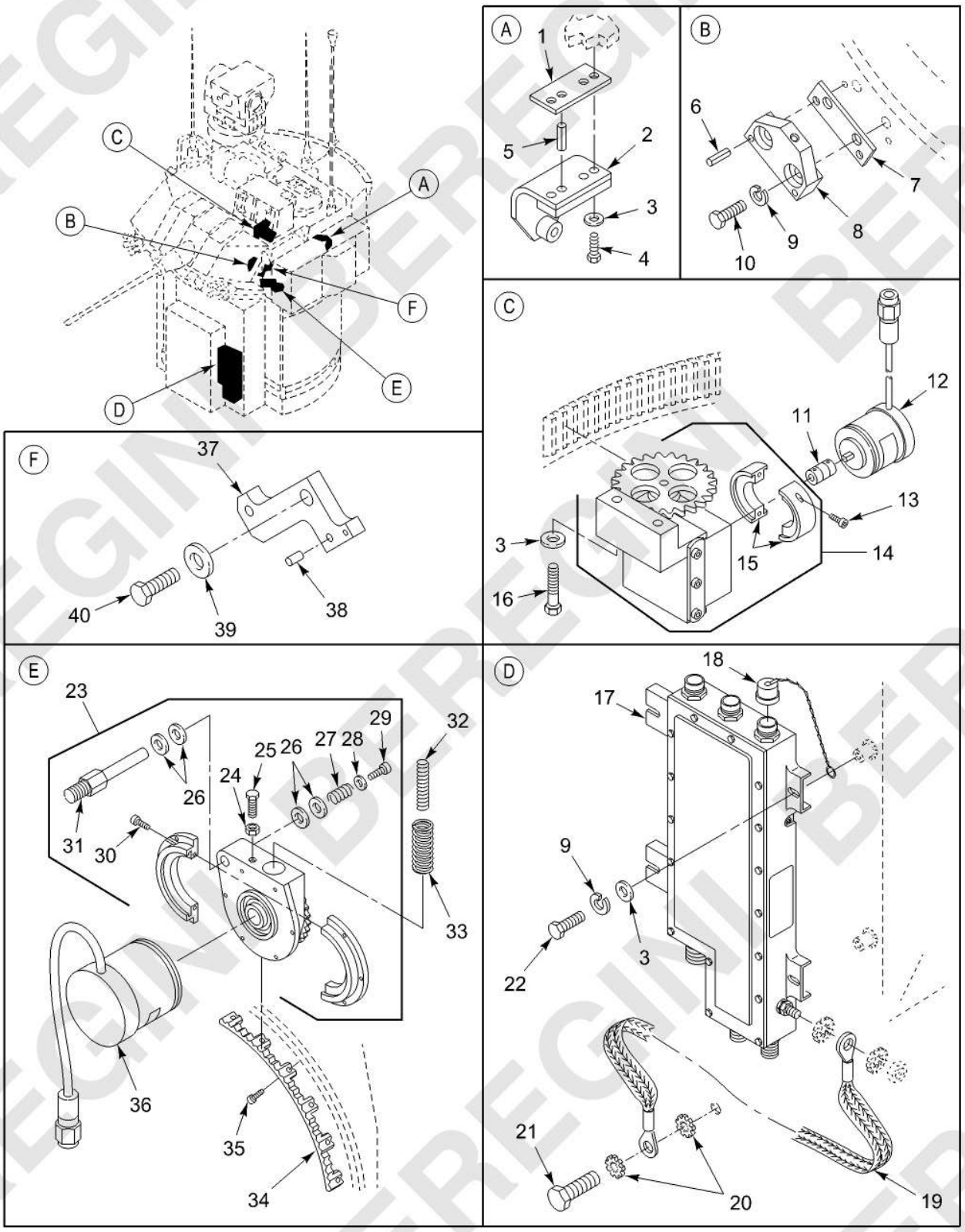

Figure 257. POS Sensor System Instl (FTBC) - 12976042-1

(1) ITEM NO.	(2) SMR CODE	(3) NSN	(4) CAGEC	(5) PART NUMBER	(6) DESCRIPTION AND USABLE ON CODE (UOC)	(7) QTY
					GROUP FTBC POS SENSOR SYSTEM INSTL	
					FIGURE 257 POS Sensor System Instl (FTBC) - 12976042-1	
1	PAFZZ	5365-01-463-8485	19200	12976768	SPACER,PLATE	6
2	PAFZZ	5340-01-464-2893	19200	12976756	BRACKET,ANGLE	1
3	PAFZZ	5310-00-809-4058	96906	MS27183-10	WASHER,FLAT	8
4	PAFZZ	5305-00-068-0509	80204	B1821BH025C125N	SCREW,CAP,HEXAGON H	2
5	PAFZZ	5315-00-844-5835	80205	MS16562-64	PIN,SPRING	2
6	PAFZZ	5315-00-844-3966	80205	MS16562-49	PIN,SPRING	2
7	PAFZZ	5365-01-545-4508	19200	12992065	SHIM	5
8	PAFZZ	5340-01-474-0740	19200	12986316	BRACKET,MOUNTING	1
9	PAFZZ	5310-00-582-5965	80205	MS35338-44	WASHER,LOCK	6
10	PAFZZ	5305-00-071-2505	80204	B1821BH025C088N	SCREW,CAP,HEXAGON H	2
11	PAFZZ	3010-01-463-1518	00328	S9901Z-G404-03	COUPLING,SHAFT,FLEX	1
12	PAFZZ	5990-01-462-9228	19200	12976452	RESOLVER,ELECTRICAL	1
13	PAFZZ	5305-00-978-9347	96906	MS16997-19	SCREW,CAP,SOCKET HE	2
14	PAFZZ	3010-01-463-0406	80212	12956633	GEARBOX ASSEMBLY,ST	1
15	PAFZZ	3010-01-463-4011	19200	12976054	.HOUSING,COUPLING	1
16	PAFZZ	5306-01-118-2445	05047	AEB02C250B00AW9A96	BOLT,MACHINE	2
17	PAFKK	1290-01-596-7196	19200	12992057-1	INTERFACE UNIT,AUTO	1
18	PAFZZ	5935-01-413-8115	77820	10-553-310-139	COVER,ELECTRICAL CO	1
19	PAFZZ	5999-01-464-6010	19200	12976747-5	STRIP,ELECTRICAL GR	1
20	PAFZZ	5310-00-061-1258	96906	MS45904-76	WASHER,LOCK	2
21	PAFZZ	5305-00-543-2419	05047	AES01C375A12AW9A91	SCREW,CAP,HEXAGON H	1
22	PAFZZ	5305-00-068-0508	05047	AES01C250750AW9A91	SCREW,CAP,HEXAGON H	4
23	PAFFF	3020-01-459-7243	19200	12956685	GEAR,DRIVE MOTION	1
24	PAFZZ	5310-00-088-1251	81349	M45913/1-4CG5Z	.NUT,SELF-LOCKING,HE	1
25	PAFZZ	5305-00-225-3843	80204	B1821BH025C100N	.SCREW,CAP,HEXAGON H	1
26	PAFZZ	5310-00-773-7618	80205	MS15795-814	.WASHER,FLAT	4
27	PAFZZ	5360-01-012-9302	74197	C0600-072-1000S	.SPRING,HELICAL,COMP	1
28	PAFZZ	5310-01-273-4535	80205	MS15795-848	.WASHER,FLAT	1
29	PAFZZ	5305-00-983-6654	80205	NAS1351-3LE16P/EXCLUDING PEL	.SCREW,CAP,SOCKET HE	1
30	PAFZZ	5305-00-978-9348	96906	MS16997-20	.SCREW,MACHINE	8

(1) ITEM NO.	(2) SMR CODE	(3) NSN	(4) CAGEC	(5) PART NUMBER	(6) DESCRIPTION AND USABLE ON CODE (UOC)	(7) QTY
31	PAFZZ	2520-01-463-1229	19200	12976623	.SHAFT,AXLE,AUTOMOTI	1
32	PAFZZ	5360-01-463-4413	70472	C0600-063-2500S	SPRING,HELICAL,COMP	1
33	PAFZZ	5360-01-203-0718	82829	C0850-098-2500S	SPRING,HELICAL,COMP	1
34	PAFZZ	3020-01-463-0723	19200	12976622	GEAR SECTOR,SPUR	1
35	PAFZZ	5305-01-266-8351	80205	NAS1351-08LL12P	SCREW,CAP,SOCKET HE	6
36	PAFZZ	5990-01-462-8415	19200	12976453	RESOLVER,ELECTRICAL	1
37	PAFZZ	5340-01-464-2908	19200	12986259	BRACKET,MOUNTING	1
38	PAFZZ	5315-00-827-7604	96906	MS39086-249	PIN,SPRING	1
39	PAFZZ	5310-00-149-9146	96906	MS20002C6	WASHER,RECESSED	1
40	PAFZZ	5305-00-821-3869	05047	AES01C375A75AW9A91	SCREW,CAP,HEXAGON H	1
					END OF FIGURE	

MAINTAINER

COVER ASSEMBLY (FTBHAPAC) - 13492643

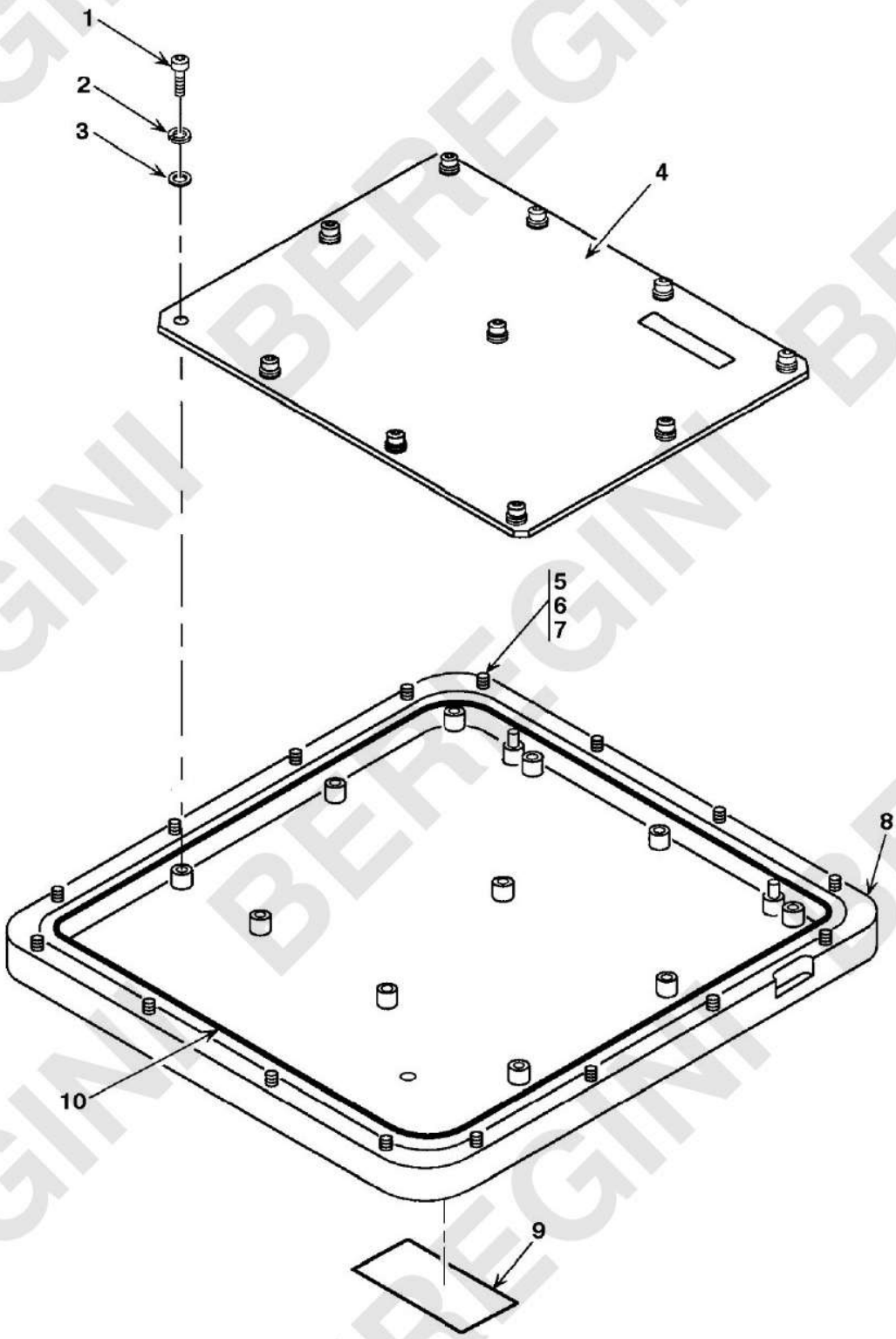

Figure 260. Cover Assembly (FTBHAPAC) - 13492643

(1) ITEM NO.	(2) SMR CODE	(3) NSN	(4) CAGEC	(5) PART NUMBER	(6) DESCRIPTION AND USABLE ON CODE (UOC)	(7) QTY
					GROUP FTBHAPAC COVER ASSEMBLY	
					FIGURE 260 Cover Assembly (FTBHAPAC) - 13492643	
1	PADZZ	5305-00-068-5276	80205	MS16995-9	SCREW,CAP,SOCKET HE	11
2	PADZZ	5310-00-933-8118	80205	MS35338-135	WASHER,LOCK	11
3	PADZZ	5310-00-595-6211	80205	MS15795-803	WASHER,FLAT	11
4	PADDD	5998-01-356-8544	19200	9376166	CIRCUIT CARD ASSEMB	1
5	PADZZ	5305-01-188-4748	96906	MS51896-11	SCREW,EXTERNALLY RE	16
6	PADZZ	5310-00-929-6395	96906	MS35338-136	WASHER,LOCK	16
7	PADZZ	5310-00-773-7624	80205	NAS620C6	WASHER,FLAT	16
8	XADDD		18876	13492644	COVER,MACHINED	1
9	PADZZ	7690-01-328-6371	18876	13294696	MARKER,IDENTIFICATI	1
10	PCDZZ	5330-00-931-7234	13499	200-2343-010	O-RING	1
					END OF FIGURE	

BEREGINI BEREGINI BEREGINI

MAINTAINER

TURRET ELECTRICAL INSTL (TURRET DRIVE/BASKET) (FTEA) - 13024689

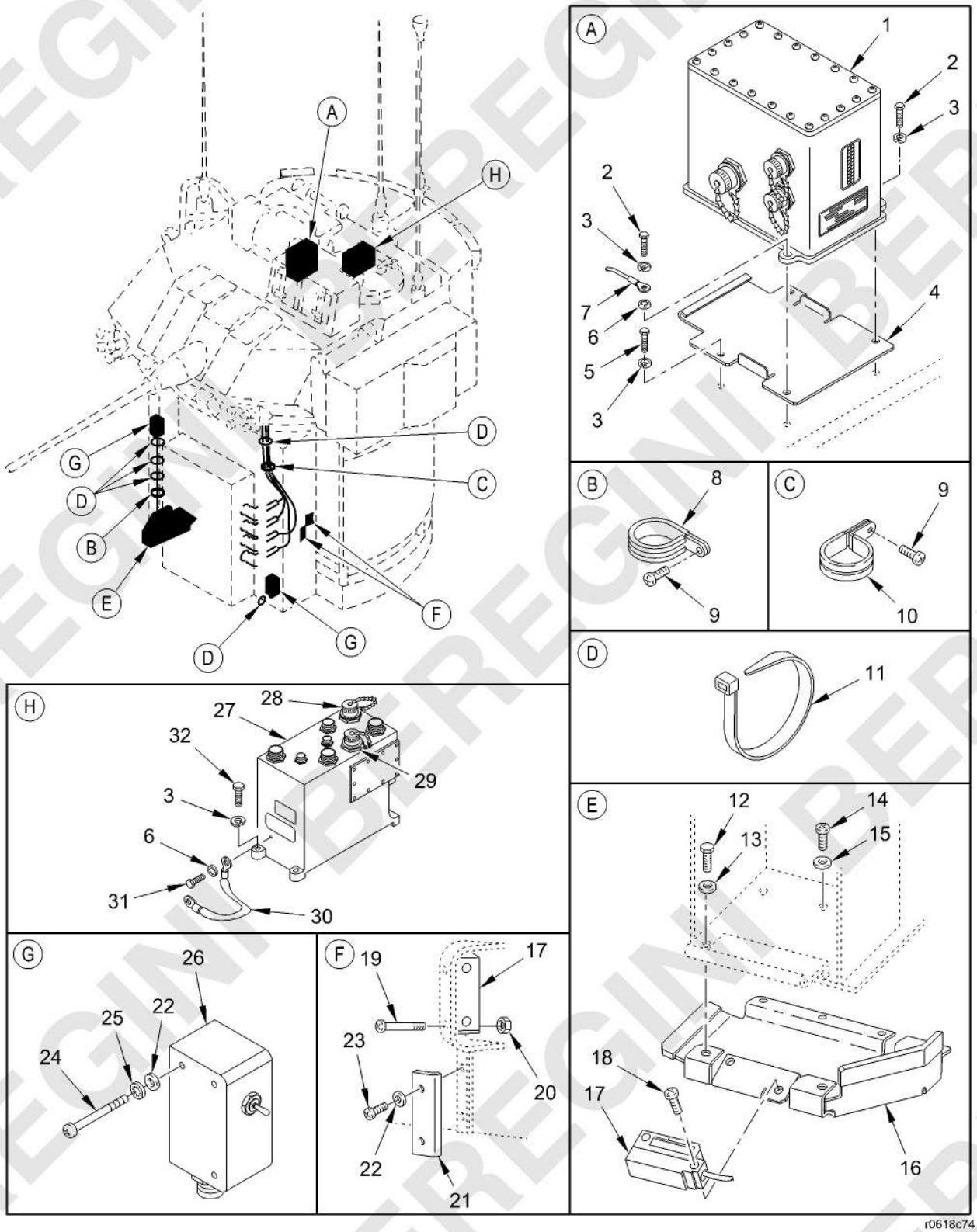

Figure 268. Turret Electrical Instl (Turret Drive/Basket) (FTEA) - 13024689

(1) ITEM NO.	(2) SMR CODE	(3) NSN	(4) CAGEC	(5) PART NUMBER	(6) DESCRIPTION AND USABLE ON CODE (UOC)	(7) QTY
					GROUP FTEA TURRET ELECTRICAL INSTL	
					FIGURE 268 Turret Electrical Instl (Turret Drive/Basket) (FTEA) - 13024689	
1	PAFKK	5999-01-587-7385	19200	12991956-1	SWITCH ASSEMBLY,SPE	1
1	PAFKK	5999-01-490-5102	19200	12991956	SWITCH ASSEMBLY,SPE	1
2	PAFZZ	5305-00-068-0509	80204	B1821BH025C125N	SCREW,CAP,HEXAGON H	2
3	PAFZZ	5310-00-582-5965	80205	MS35338-44	WASHER,LOCK UOC: [redacted]	6
4	PAFZZ	5340-01-492-3318	19200	12991962	PLATE,MOUNTING	1
5	PAFZZ	5305-00-225-3843	80204	B1821BH025C100N	SCREW,CAP,HEXAGON H	2
6	PAFZZ	5310-00-550-1130	80205	MS35333-40	WASHER,LOCK UOC: BSA	2
7	PAFZZ	5999-01-463-1448	19200	12976747-4	STRIP,ELECTRICAL GR	1
8	PAFZZ	5340-00-579-9678	81343	AS21919WDG32	CLAMP,LOOP	3
9	PAFZZ	5305-00-984-6210	80205	MS35206-263	SCREW,MACHINE UOC: BSA	4
10	PAFZZ	5340-00-515-0595	81343	AS21919WDG36	CLAMP,LOOP	1
11	PAFZZ	5975-00-451-5001	81343	MS3367-3-9	STRAP,TIEDOWN,ELECT	1
12	PAFZZ	5306-00-226-4827	05047	AEB02C312A00AW9A81	BOLT,MACHINE	2
13	PAFZZ	5310-00-081-4219	96906	MS27183-12	WASHER,FLAT	2
14	PAFZZ	5305-00-988-1727	80205	MS35206-283	SCREW,MACHINE	3
15	PAFZZ	5310-00-823-8804	96906	MS27183-9	WASHER,FLAT	3
16	PAFZZ	5975-01-300-6501	19200	9380262	HANGER,CABLE	1
17	PAFFF	5895-01-157-3077	19207	12295082-3	INDICATOR CONTROL S	2
18	PAFZZ	5305-00-984-6216	96906	MS35206-269	SCREW,MACHINE	2
19	PAFZZ	5305-00-995-3441	80205	MS35207-269	SCREW,MACHINE	2
20	PAFZZ	5310-00-902-6676	80205	MS21083N3	NUT,SELF-LOCKING,HE	2
21	PAFZZ	5340-01-113-1527	19207	12297886	STRAP,RETAINING	1
22	PAFZZ	5310-00-014-5850	96906	MS27183-42	WASHER,FLAT UOC: BSA	8
23	PAFZZ	5305-01-299-9534	80205	MS35206-261	SCREW,MACHINE	2
24	PAFZZ	5305-00-984-7364	96906	MS35206-273	SCREW,MACHINE	6
25	PAFZZ	5310-00-576-5752	80205	MS35333-39	WASHER,LOCK	6
26	PAFZZ	5930-01-456-0530	19200	12982416	SWITCH ASSEMBLY	2

(1) ITEM NO.	(2) SMR CODE	(3) NSN	(4) CAGEC	(5) PART NUMBER	(6) DESCRIPTION AND USABLE ON CODE (UOC)	(7) QTY
27	PAFHH	5895-01-535-3045	19200	12975896-2	COMM INTERFACE UNIT, SEE TM 9-2350-406-23&P.....	1
28	PAFZZ	5935-01-618-0362	81349	D38999/33M23N	COVER,ELECTRICAL CO	2
29	PAFZZ	5935-01-462-9319	81349	D38999/33M21N	COVER,ELECTRICAL CO	1
30	PAFZZ	5999-01-463-0569	19200	12976747	STRIP,ELECTRICAL GR	1
31	PAFZZ	5305-00-071-2508	05047	AES01C250378AW9A91	SCREW,CAP,HEXAGON H ..... UOC: BSA	2
32	PAFZZ	5305-00-071-2509	80204	B1821BH025C150N	SCREW,CAP,HEXAGON H ..... UOC: BSA	2
					END OF FIGURE	

MAINTAINER

TURRET ELECTRICAL INSTL (GUNNERS) (FTEA) - 13024689

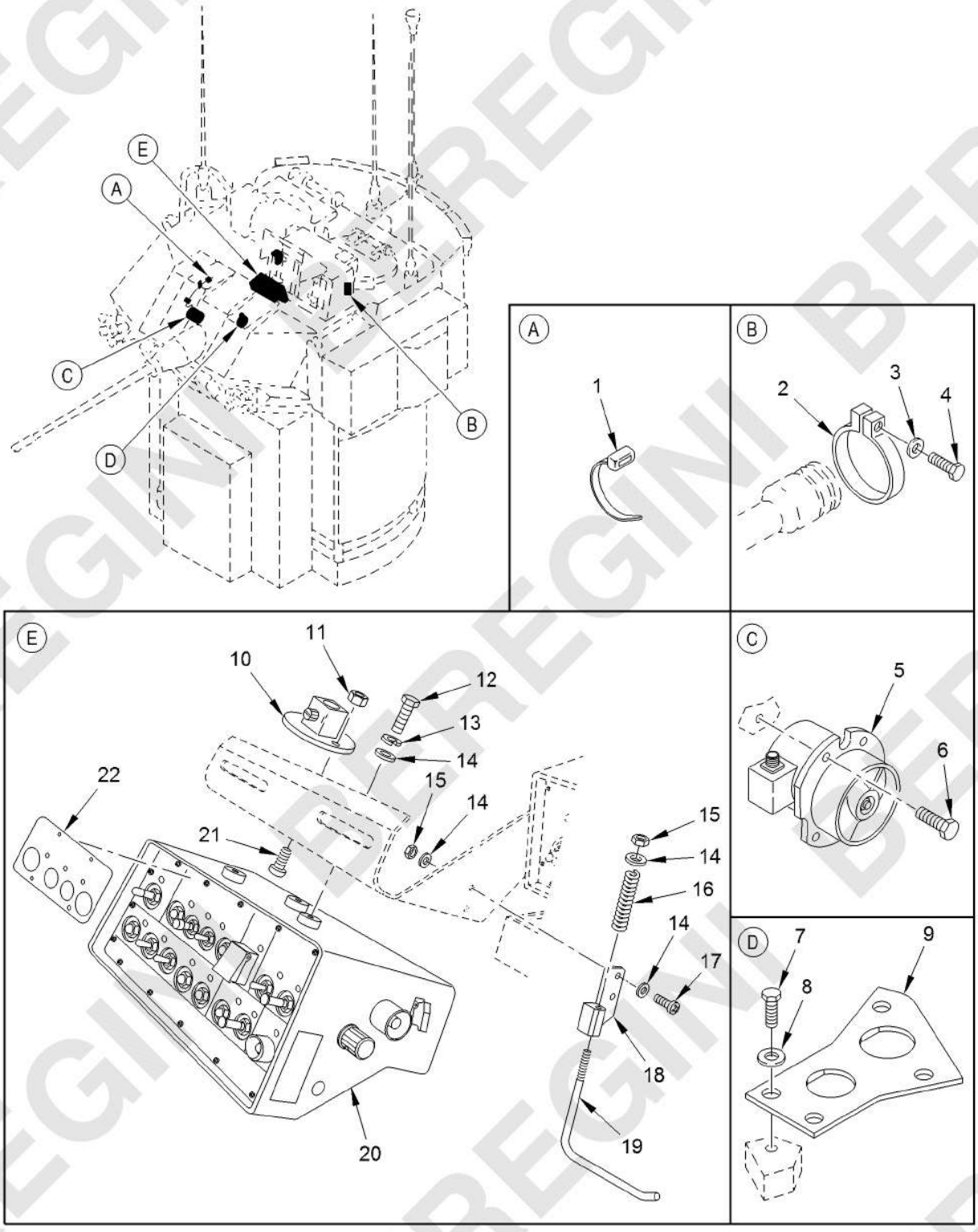

Figure 270. Turret Electrical Instl (Gunners) (FTEA) - 13024689
(Sheet 1 of 3)

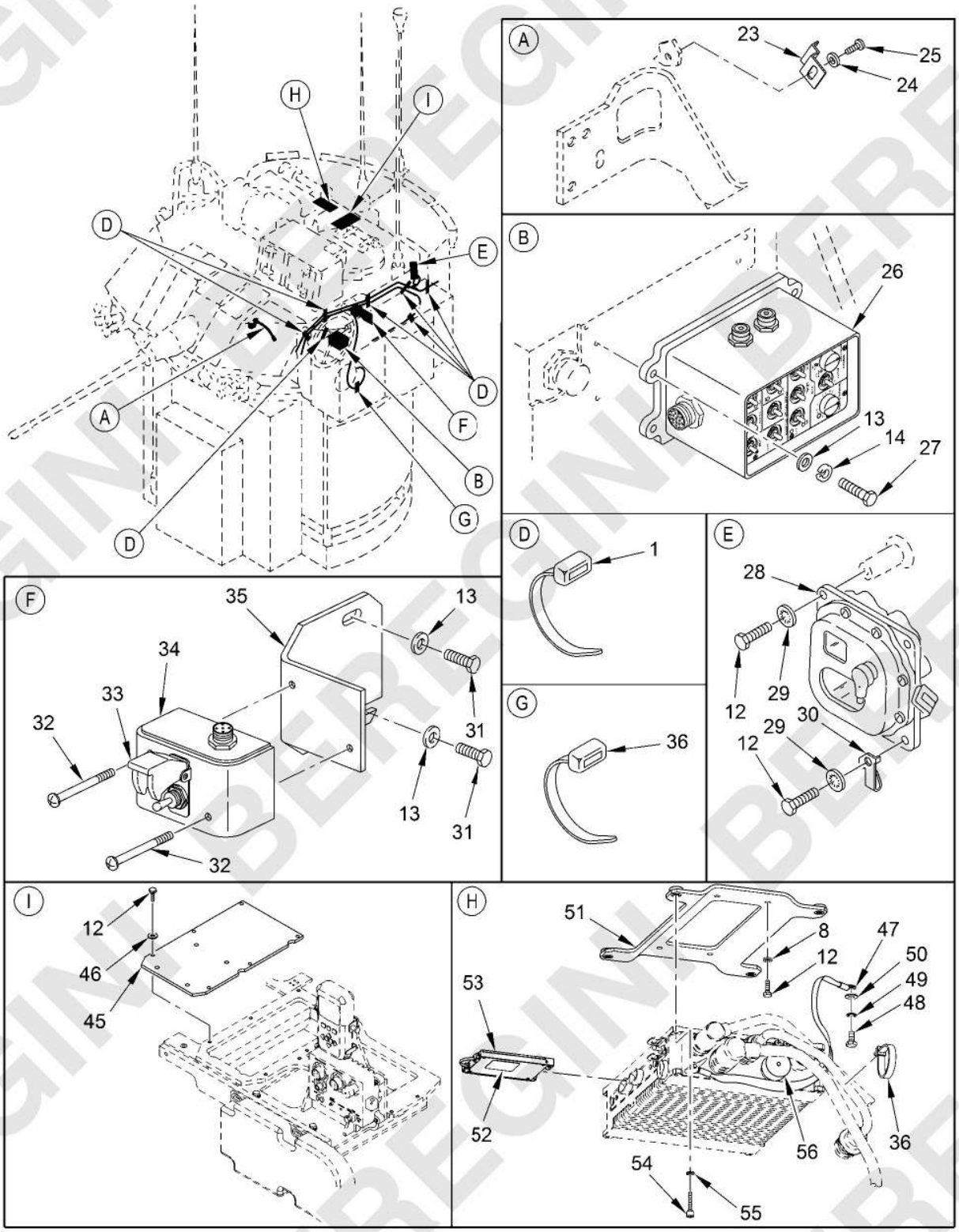

Figure 270. Turret Electrical Instl (Gunners) (FTEA) - 13024689
(Sheet 2 of 3)

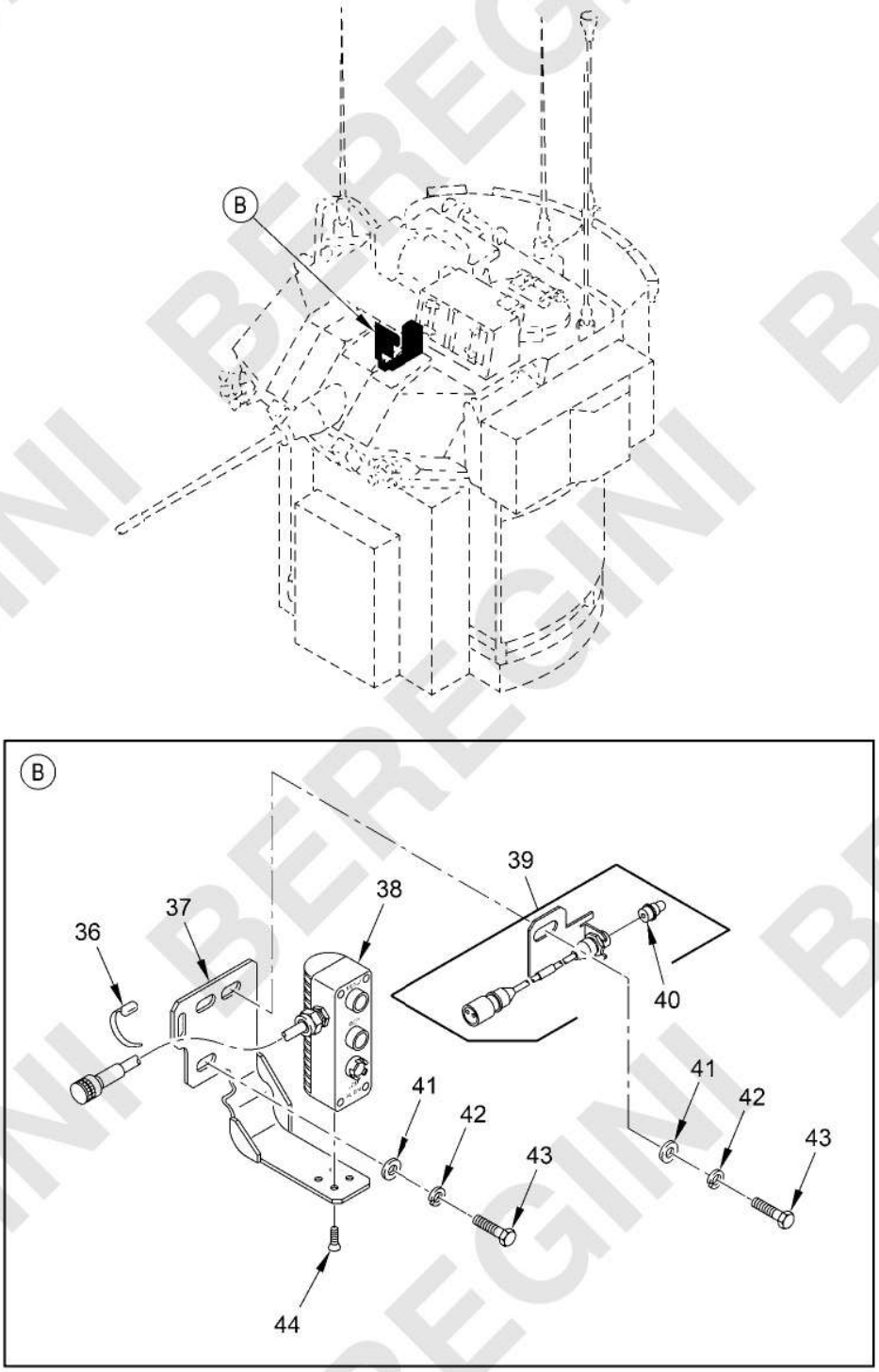

Figure 270. Turret Electrical Instl (Gunners) (FTEA) - 13024689
(Sheet 3 of 3)

(1) ITEM NO.	(2) SMR CODE	(3) NSN	(4) CAGEC	(5) PART NUMBER	(6) DESCRIPTION AND USABLE ON CODE (UOC)	(7) QTY
					GROUP FTEA TURRET ELECTRICAL INSTL	
					FIGURE 270 Turret Electrical Instl (Gunners) (FTEA) - 13024689	
1	PAFZZ	5975-00-451-5001	81343	MS3367-3-9	STRAP,TIEDOWN,ELECT	3
2	PAFZZ	5340-01-174-9259	19207	12317066	CLAMP,LOOP	1
3	PAFZZ	5310-00-823-8804	96906	MS27183-9	WASHER,FLAT	1
4	PAFZZ	5306-01-183-9265	80205	NAS6604L9	BOLT,SELF-LOCKING	1
5	PAFFF	4140-01-112-8519	19207	12308376	FAN,VANEAXIAL 2A10,SEE FIG. 281 FOR BREAKDOWN	1
6	PAFZZ	5305-00-068-0511	05047	AES01C375A25AW9A91	SCREW,CAP,HEXAGON H UOC: BSA	5
7	PAFZZ	5305-00-071-2506	05047	AES01C250500AW9A91	SCREW,CAP,HEXAGON H UOC: BSA	4
8	PAFZZ	5310-00-865-9513	19207	10910174-1	WASHER,FLAT	7
9	PAFZZ	5340-01-526-6510	19200	12994824	PLATE,MOUNTING	1
10	PAFZZ	5340-01-237-7422	96906	MS17246-1	PLATE,MOUNTING	1
11	PAFZZ	5310-00-902-6676	80205	MS21083N3	SCREW,CAP,HEXAGON H UOC: BSA	2
12	PAFZZ	5305-00-068-0508	05047	AES01C250750AW9A91	SCREW,CAP,HEXAGON H UOC: [redacted]	16
13	PAFZZ	5310-00-582-5965	80205	MS35338-44	WASHER,LOCK UOC: [redacted]	7
14	PAFZZ	5310-00-809-4058	96906	MS27183-10	WASHER,FLAT UOC: BSA	14
15	PAFZZ	5310-00-088-1251	81349	M45913/1-4CG5Z	NUT,SELF-LOCKING,HE UOC: [redacted]	3
16	PAFZZ	5360-01-481-5479	39428	9657K113	SPRING,HELICAL,COMP	1
17	PAFZZ	5305-00-988-1727	80205	MS35206-283	SCREW,MACHINE	2
18	PAFZZ	5340-01-505-4152	19200	12991996	HOUSING,LATCH	1
19	PAFZZ	5340-01-586-5541	19200	12976701-1	LATCH,MORTISE	1
20	PAFFF	1005-01-598-4401	19200	12992083-3	CONTROL BOX,ELECTRI [redacted] SEE TM 9-2350-406-23&P	1
21	PAFZZ	5305-00-989-7435	80205	MS35207-264	SCREW,MACHINE UOC: BSA	2
22	PAFZZ	1290-01-632-0814	19200	13038593	PANEL,CONTROL,ELECT	1
23	PAFZZ	5340-01-464-2471	19200	12976791	BRACKET,MOUNTING	1
24	PAFZZ	5310-00-014-5850	96906	MS27183-42	WASHER,FLAT UOC: BSA	1

(1) ITEM NO.	(2) SMR CODE	(3) NSN	(4) CAGEC	(5) PART NUMBER	(6) DESCRIPTION AND USABLE ON CODE (UOC)	(7) QTY
25	PAFZZ	5305-00-984-6210	80205	MS35206-263	SCREW,MACHINE ..... UOC: BSA	1
26	PAFKK	5895-01-598-7688	06085	12992093-3	CONTROL PANEL,GUNNE 2A108,SEE TM 9-2350-406-23&P.....	1
27	PAFZZ	5305-00-225-3842	05047	AES01C250A12AW9A91	SCREW,CAP,HEXAGON H	4
28	PAFZZ	3040-01-185-5888	19207	12329033-5	CONNECTING LINK,RIG 2A16,2A17, SEE FIG. 280 FOR BREAKDOWN.....	1
29	PAFZZ	5310-00-550-1130	80205	MS35333-40	WASHER,LOCK ..... UOC: BSA	4
30	PAFZZ	1005-01-166-9652	19207	12308954	HOOK,HELMET	1
31	PAFZZ	5305-00-068-7837	05047	AEB02C250625WA6AA1	SCREW,CAP,HEXAGON H	2
32	PAFZZ	5305-00-958-0585	96906	MS35207-272	SCREW,MACHINE	2
33	PAFZZ	5930-01-501-9216	19200	12991950	GUARD,SWITCH	1
34	PAFZZ	5930-01-500-9516	19200	12991987	SWITCH,TOGGLE 2A40.....	1
35	PAFZZ	5340-01-501-5622	19200	12991930	BRACKET,MOUNTING	1
36	PAFZZ	5975-00-156-3253	81343	MS3367-2-9	STRAP,TIEDOWN,ELECT	3
37	PAFZZ	5340-01-590-2223	19200	13020444	BRACKET,ANGLE	1
38	PAFZZ	6130-01-587-6330	19200	13020348	CONTROL,POWER SUPPL	1
39	PAFFF	6220-01-458-4368	19200	12976787	LIGHT,INDICATOR	1
40	PAFZZ	6240-00-763-7744	81349	M6363/8-7	.LAMP,INCANDESCENT	1
41	PAFZZ	5310-00-773-7618	80205	MS15795-814	WASHER,FLAT ..... UOC: BSA	3
42	PAFZZ	5310-00-984-7042	80205	MS35338-141	WASHER,LOCK	3
43	PAFZZ	5305-00-068-0511	05047	AES01C375A25AW9A91	SCREW,CAP,HEXAGON H ..... UOC: BSA	3
44	PAFZZ	5305-01-613-0244	80205	MS24667-13ZL	SCREW,CAP,SOCKET HE	4
45	PAFZZ	1005-01-675-2018	19200	13061626	PLATE, ADAPTER ..... UOC: BSA	1
46	PAFZZ	5310-00-582-5677	80205	MS15795-810	WASHER,FLAT ..... UOC: BSA	6
47	PAFZZ		19207	12586629-10	GROUND STRAP ..... UOC: BSA	1
48	PAFZZ	5305-01-648-4023	80204	B1821BH025C050N	SCREW,CAP,HEXAGON HEAD ..... UOC: BSA	1
49	PAFZZ	5310-00-933-8121	80205	MS35338-139	WASHER,LOCK ..... UOC: BSA	1
50	PAFZZ	5310-00-543-2740	80205	MS35333-74	WASHER,LOCK ..... UOC: BSA	1
51	PAFZZ		19200	13057301	BRACKET [redacted] ..... UOC: BSA	1

(1) ITEM NO.	(2) SMR CODE	(3) NSN	(4) CAGEC	(5) PART NUMBER	(6) DESCRIPTION AND USABLE ON CODE (UOC)	(7) QTY
52	PAFZZ		1RWE7	0300-54637-00000	BATTERY,NONRECHARGEABLE ..... UOC: BSA	1
53	PAFZZ	7025-01-624-3792	1RWE7	9800-96612-0512	DISK DRIVE UNIT ..... UOC: BSA	1
54	PAFZZ	5305-01-066-3535	80205	NAS1352-3-14	SCREW,CAP,SOCKET HEAD ..... UOC: BSA	4
55	PAFZZ	5310-00-271-7454	96906	MS35338-119	WASHER,LOCK ..... UOC: BSA	4
56	PAFZZ	5935-01-672-4991	19200	13045959	CONNECTOR,PLUG,ELEC ..... UOC: BSA	1
					END OF FIGURE	

BEREGINI BEREGINI BEREGINI

MAINTAINER

TURRET ELECTRICAL INSTL (COMMANDERS) (FTEA) - 13024689

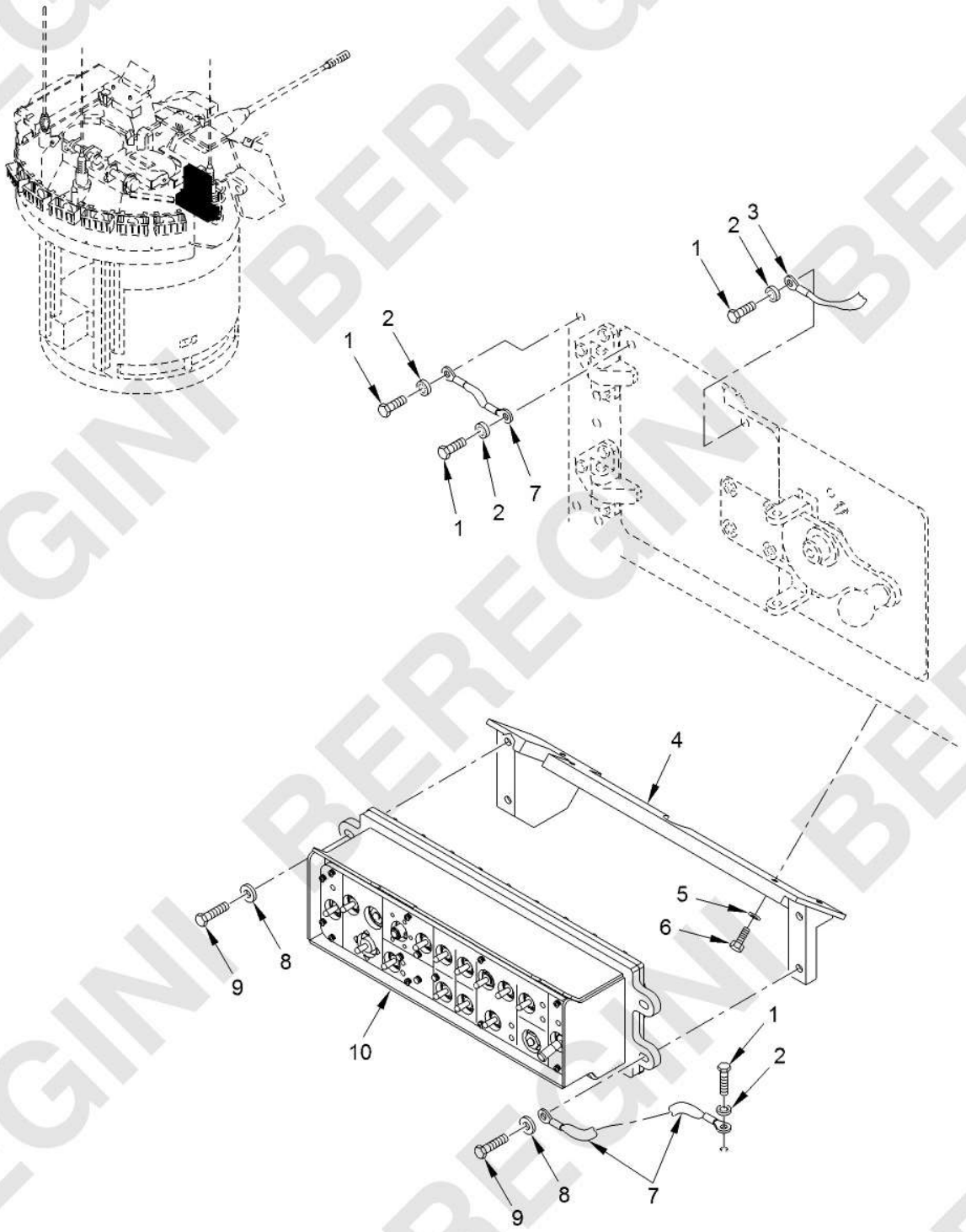

Figure 271. Turret Electrical Instl (Commanders) (FTEA) - 13024689
(Sheet 1 of 3)

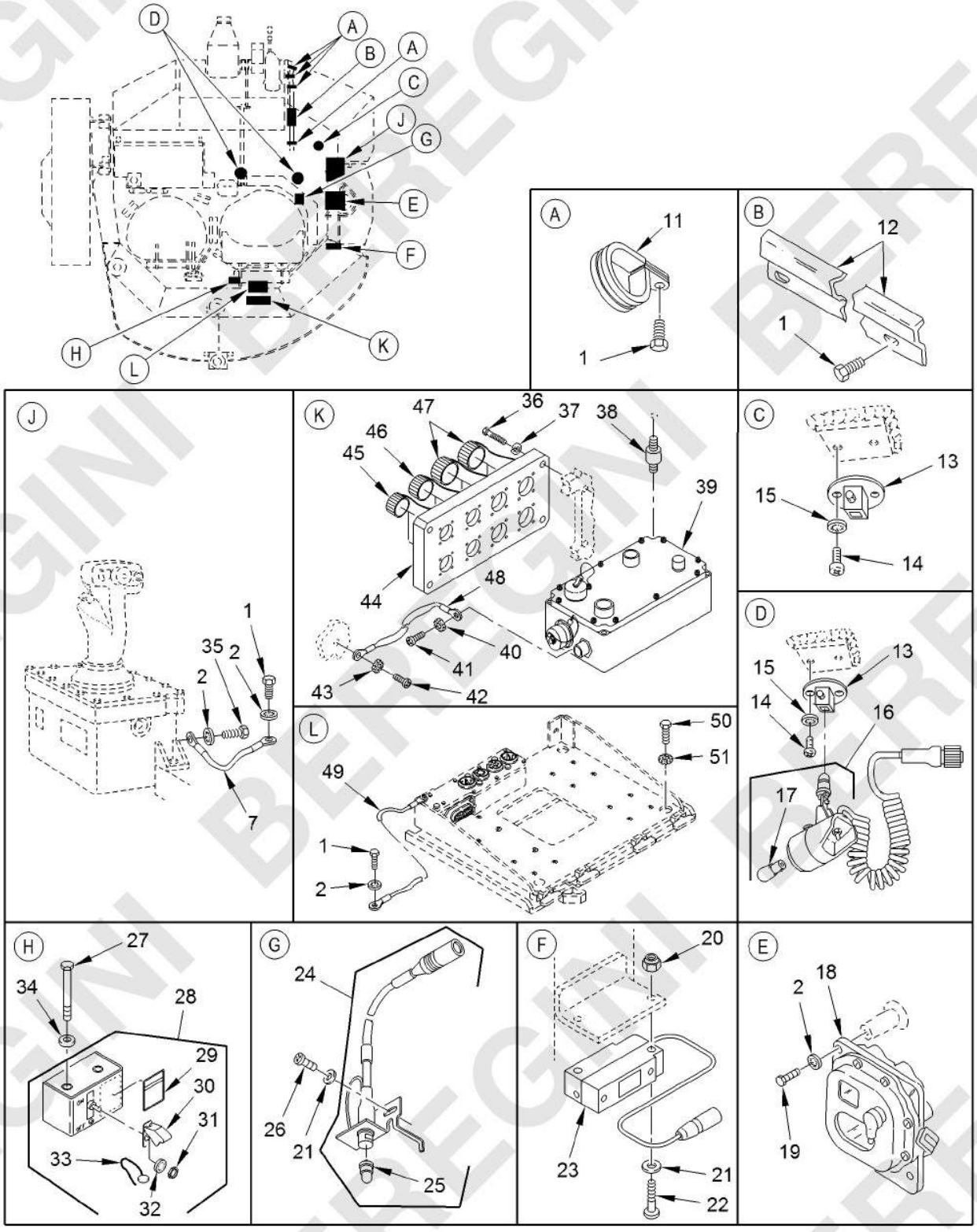

Figure 271. Turret Electrical Instl (Commanders) (FTEA) - 13024689
(Sheet 2 of 3)

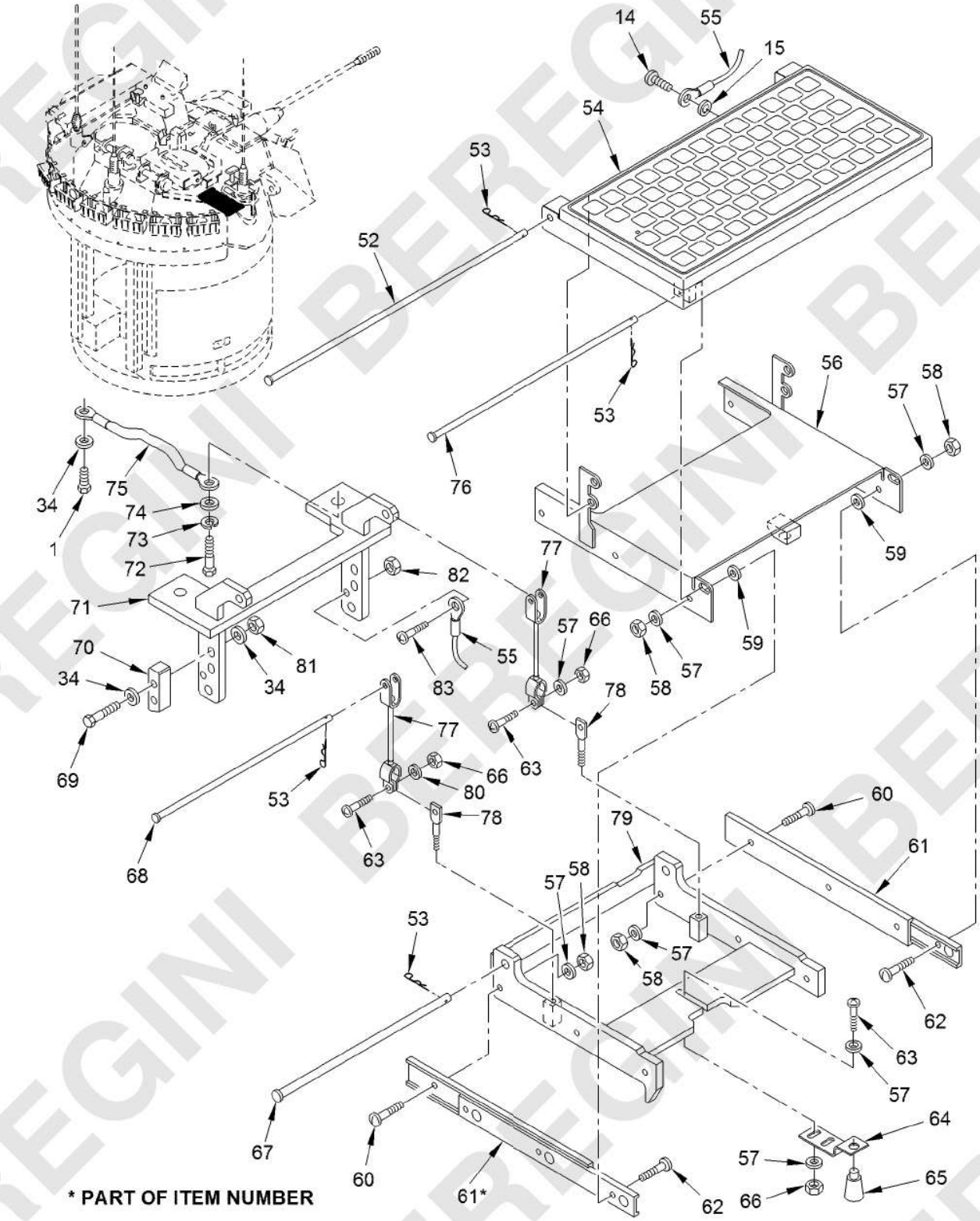

Figure 271. Turret Electrical Instl (Commanders) (FTEA) - 13024689
(Sheet 3 of 3)

(1) ITEM NO.	(2) SMR CODE	(3) NSN	(4) CAGEC	(5) PART NUMBER	(6) DESCRIPTION AND USABLE ON CODE (UOC)	(7) QTY
					GROUP FTEA TURRET ELECTRICAL INSTL	
					FIGURE 271 Turret Electrical Instl (Commanders) (FTEA) - 13024689	
1	PAFZZ	5305-00-071-2506	05047	AES01C250500AW9A91	SCREW,CAP,HEXAGON H UOC: BSA	13
2	PAFZZ	5310-00-550-1130	80205	MS35333-40	WASHER,LOCK UOC: BSA	11
3	PAFZZ	5999-01-463-1102	19200	12976747-2	STRIP,ELECTRICAL GR	1
4	PAFZZ	5340-01-544-2876	19200	12986298	BRACKET,CMDR PANEL	1
5	PAFZZ	5310-00-596-7599	80205	MS15795-514	WASHER,FLAT	4
6	PAFZZ	5305-00-068-0510	80204	B1821BH038C100N	SCREW,CAP,HEXAGON H	4
7	PAFZZ	5999-01-463-0569	19200	12976747	STRIP,ELECTRICAL GR	3
8	PAFZZ	5310-00-285-8124	96906	MS27183-50	WASHER,FLAT	4
9	PAFZZ	5305-00-071-2505	80204	B1821BH025C088N	SCREW,CAP,HEXAGON H UOC: BSA	4
10	PAFKK	5895-01-541-8031	19200	12992085	CONTROL PANEL,COMMA 2A107, OPTIONAL W/ 12992085-3, SEE TM 9-2350-406-23&P	1
10	PAFKK	5895-01-598-7687	06085	12992085-3	CONTROL PANEL,COMMA 2A107, OPTIONAL W/ 12992085-1	1
11	PAFZZ	5340-00-809-1490	80205	MS21333-98	CLAMP,LOOP	4
12	PAFZZ	5975-01-115-3003	19207	12293171	PROTECTOR,ELECTRICA	1
13	PAFZZ	5340-01-237-7422	96906	MS17246-1	PLATE,MOUNTING UOC: BSA	3
14	PAFZZ	5305-00-984-6210	80205	MS35206-263	SCREW,MACHINE UOC: BSA	7
15	PAFZZ	5310-00-576-5752	80205	MS35333-39	WASHER,LOCK UOC: BSA	7
16	PAFFF	6230-01-237-2953	19200	9379604	LIGHT,EXTENSION	2
17	PAFZZ	6240-00-155-8714	96906	MS25231-313	LAMP,INCANDESCENT UOC: [redacted]	2
18	PAFZZ	3040-01-185-5888	19207	12329033-5	CONNECTING LINK,RIG 2A16,2A17,SEE FIG. 276 FOR BREAKDOWN	1
19	PAFZZ	5305-00-068-0508	05047	AES01C250750AW9A91	SCREW,CAP,HEXAGON H UOC: [redacted]	4
20	PAFZZ	5310-00-902-6676	80205	MS21083N3	NUT,SELF-LOCKING,HE	2
21	PAFZZ	5310-00-014-5850	96906	MS27183-42	WASHER,FLAT UOC: BSA	5

(1) ITEM NO.	(2) SMR CODE	(3) NSN	(4) CAGEC	(5) PART NUMBER	(6) DESCRIPTION AND USABLE ON CODE (UOC)	(7) QTY
22	PAFZZ	5305-00-995-3441	80205	MS35207-269	SCREW,MACHINE	2
23	PAFFF	5895-01-157-3077	19207	12295082-3	INDICATOR CONTROL S	1
24	PAFFF	6210-01-206-0138	19207	12328624-1	LIGHT,INDICATOR	1
25	PAFZZ	6240-00-763-7744	81349	M6363/8-7	.LAMP,INCANDESCENT	1
26	PAFZZ	5305-01-299-9534	80205	MS35206-261	SCREW,MACHINE	3
27	PAFZZ	5305-00-071-2515	80204	B1821BH025C300N	SCREW,CAP,HEXAGON H	2
28	PAFZZ	5930-01-324-2220	19200	9380973	SWITCH ASSEMBLY	1
29	PAFZZ	7690-01-481-6825	19200	12987584	.MARKER,IDENTIFICATI	1
30	PAFZZ	5930-00-617-9718	96906	MS25224-3	.GUARD,SWITCH UOC: BSA	1
31	PAFZZ	5310-01-139-1427	96906	MS21340-04	.NUT,PLAIN,HEXAGON	1
32	PAFZZ	5310-01-078-9699	80205	MS35333-136	.WASHER,LOCK	1
33	PAFZZ	4010-00-835-9815	19207	8720150	.SEAL,ANTIPILFERAGE	1
34	PAFZZ	5310-00-809-4058	96906	MS27183-10	WASHER,FLAT UOC: BSA	7
35	PAFZZ	5305-00-267-8952	80204	B1821BH025F050N	SCREW,CAP,HEXAGON H	1
36	PAFZZ	5305-01-013-3691	80205	NAS1352-4-10P	SCREW,CAP,SOCKET HE UOC: BSA	6
37	PAFZZ	5310-00-582-5965	80205	MS35338-44	WASHER,LOCK UOC: [redacted]	6
38	PAFZZ	5342-01-199-2349	76005	SMB006-0200-9	MOUNT,RESILIENT	4
39	PAFKK	7025-01-587-3576	19200	13020198	INTERFACE BOX II ET ETDIB-2	1
40	PAFZZ	5310-00-543-5933	80205	MS35333-73	WASHER,LOCK UOC: BSA	1
41	PAFZZ	5305-01-589-9834	80205	MS35206-261Z	SCREW,MACHINE UOC: BSA	1
42	PAFZZ	5305-01-586-9662	80205	MS35206-279Z	SCREW,MACHINE UOC: BSA	1
43	PAFZZ	5310-00-543-2740	80205	MS35333-74	WASHER,LOCK UOC: BSA	1
44	PAFZZ	5340-01-474-0767	19200	12976779	PLATE,MOUNTING	1
45	PAFZZ	5935-01-462-9312	81349	D38999/33M11N	COVER,ELECTRICAL CO	2
46	PAFZZ	5935-01-475-2449	81349	D38999/33M13N	CONNECTOR,RECEPTACL	2
47	PAFZZ	5935-01-471-1007	81349	D38999/33M15N	COVER,ELECTRICAL CO	4
48	PAFZZ	6150-00-722-5707	81349	M83413/8-A005BC	LEAD,ELECTRICAL	1
49	PAFZZ	5999-01-464-6010	19200	12976747-5	STRIP,ELECTRICAL GR	1
50	PAFZZ	5306-00-226-4827	05047	AEB02C312A00AW9A81	BOLT,MACHINE	4
51	PAFZZ	5310-00-514-6674	96906	MS35335-34	WASHER,LOCK	4

(1) ITEM NO.	(2) SMR CODE	(3) NSN	(4) CAGEC	(5) PART NUMBER	(6) DESCRIPTION AND USABLE ON CODE (UOC)	(7) QTY
52	PAFZZ	5315-01-543-1720	19200	12976731	PIN	1
53	PAFZZ	5315-00-815-1405	80205	MS24665-151	PIN,COTTER	4
54	PAFKK	7025-01-581-6251	19200	13023329	DATA ENTRY TOOL	1
55	PAFZZ	6150-01-487-0786	81349	M83413/8-A012BB	LEAD,ELECTRICAL UOC: BSA	1
56	PAFZZ	5340-01-464-2538	076M6	12976440	BRACKET,MOUNTING	1
57	PAFZZ	5310-00-765-3197	96906	MS27183-41	WASHER,FLAT UOC: BSA	16
58	PAFZZ	5310-00-811-3494	80205	MS21044N08	NUT,SELF-LOCKING,HE	12
59	PAFZZ	5310-01-390-5131	80205	NAS1149F0432P	WASHER,FLAT UOC: BSA	1
60	PAFZZ	5305-01-351-0882	39428	90283A194	SCREW,MACHINE	6
61	PAFZZ	5340-01-463-6227	06666	CLB-203-10	SLIDE SECTION,DRAWE	1
62	PAFZZ	5305-01-463-1025	39428	90283A199	SCREW,MACHINE	6
63	PAFZZ	5305-00-993-1848	80205	MS35207-265	SCREW,MACHINE	4
64	PAFZZ	5340-01-465-4631	19200	12976442	BRACKET,DOUBLE ANGL	1
65	PAFZZ	5340-01-369-6921	94222	56-99-238-20	PLUNGER,DETENT	1
66	PAFZZ	5310-00-877-5797	80205	MS21044N3	NUT,SELF-LOCKING,HE UOC: BSA	4
67	PAFZZ	5315-01-463-2626	19200	12976610	PIN,STRAIGHT,HEADED	1
68	PAFZZ	5315-01-463-2362	19200	12976504-2	PIN,STRAIGHT,HEADED	1
69	PAFZZ	5305-00-225-3841	05047	AES01C250A37AW9A91	SCREW,CAP,HEXAGON H	2
70	PAFZZ	5340-01-464-3377	19200	12976727	STOP,MECHANICAL	1
71	PAFZZ	5340-01-464-2576	19200	12976505	BRACKET,MOUNTING	1
72	PAFZZ	5305-01-140-9118	80204	B1821BH038C088N	SCREW,CAP,HEXAGON H UOC: BSA	2
73	PAFZZ	5310-00-004-5033	80205	MS35338-46	WASHER,LOCK UOC: BSA	2
74	PAFZZ	5310-00-080-6004	96906	MS27183-14	WASHER,FLAT	2
75	PAFZZ	5999-01-463-1102	19200	12976747-2	STRIP,ELECTRICAL GR	1
76	PAFZZ	5315-01-463-2361	19200	12976504-1	PIN,STRAIGHT,HEADED	1
77	PAFZZ	4010-01-463-1743	19200	12976732	WIRE ROPE ASSEMBLY,	2
78	PAFZZ	5306-01-236-1588	39428	90172A542	BOLT,EYE	2
79	PAFZZ	7040-01-462-8859	19200	12976441	KEYBOARD SUPPORT	1
80	PAFZZ	5310-01-312-4959	96906	MS27183-47	WASHER,FLAT	2
81	PAFZZ	5310-00-088-1251	81349	M45913/1-4CG5Z	NUT,SELF-LOCKING,HE UOC: [redacted]	2

(1) ITEM NO.	(2) SMR CODE	(3) NSN	(4) CAGEC	(5) PART NUMBER	(6) DESCRIPTION AND USABLE ON CODE (UOC)	(7) QTY
82	PAFZZ	5310-01-470-8821	96906	MS21044F-N3	NUT,SELF-LOCKING,HE	1
83	PAFZZ	5305-00-989-7435	80205	MS35207-264	SCREW,MACHINE ..... UOC: BSA	1
					END OF FIGURE	

MAINTAINER

TURRET ELECTRICAL INSTL (HARNESS) (FTEA) - 13024689

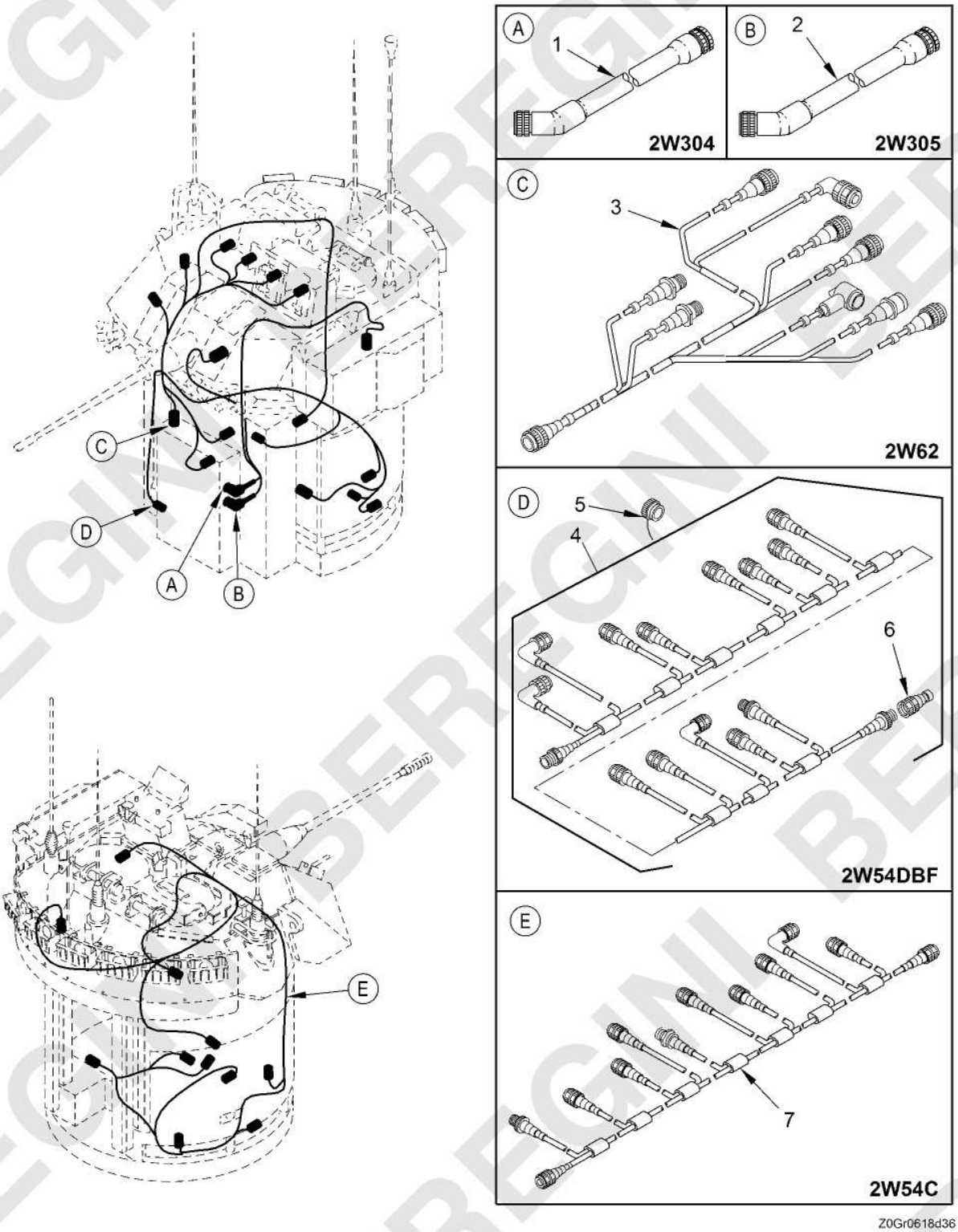

Figure 272. Turret Electrical Instl (Harness) (FTEA) - 13024689
(Sheet 1 of 9)

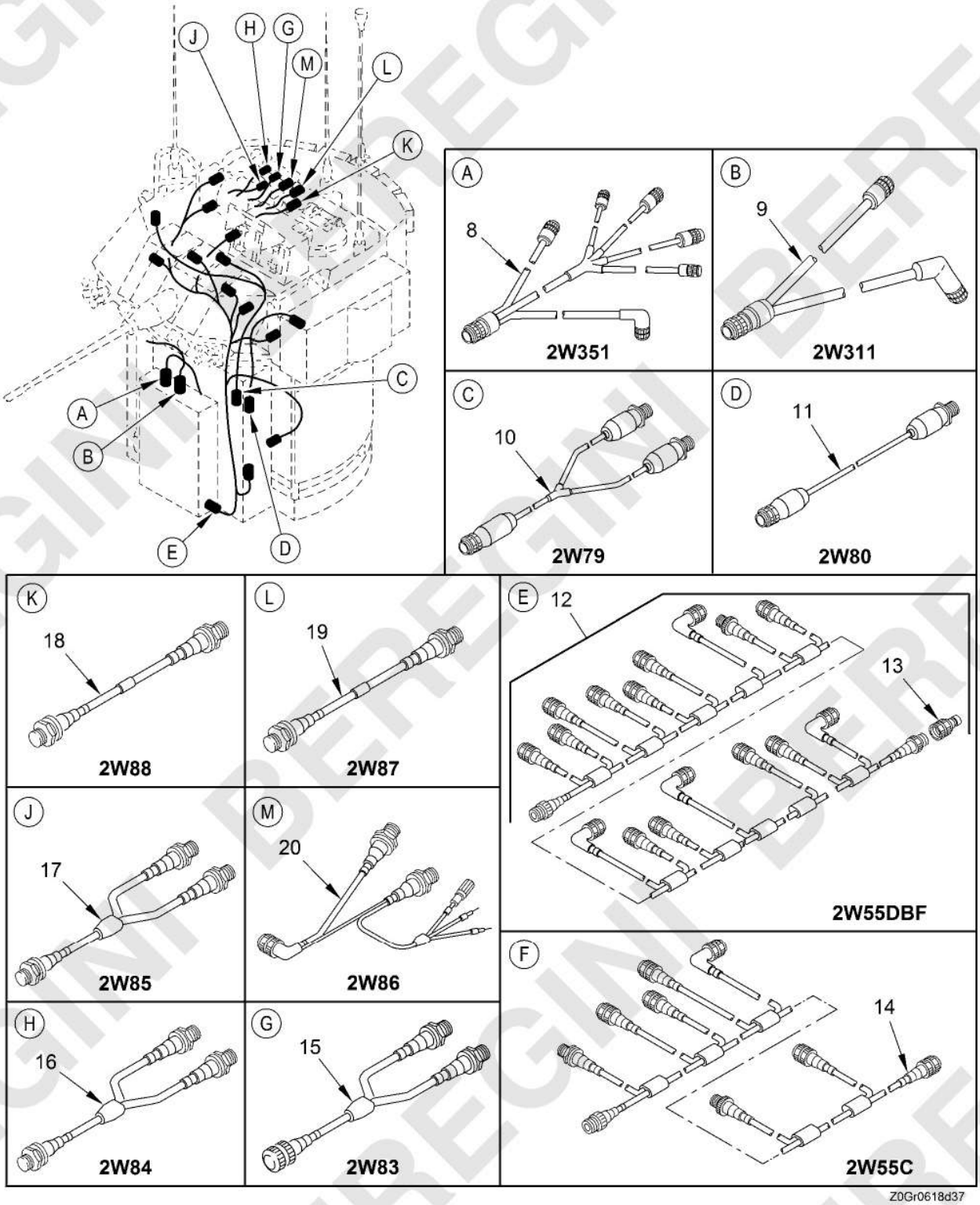

Figure 272. Turret Electrical Instl (Harness) (FTEA) - 13024689
(Sheet 2 of 9)

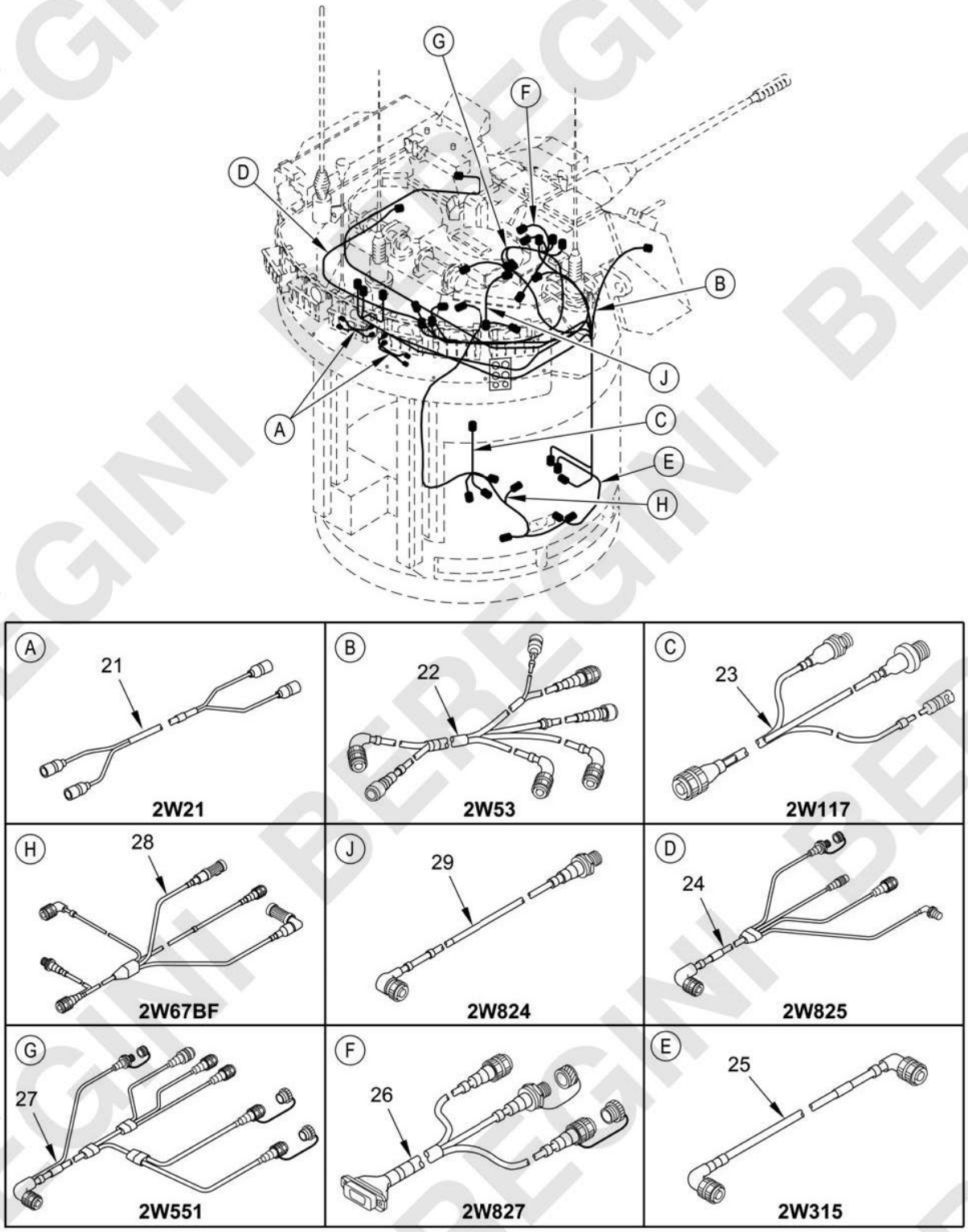

Figure 272. Turret Electrical Instl (Harness) (FTEA) - 13024689
(Sheet 3 of 9)

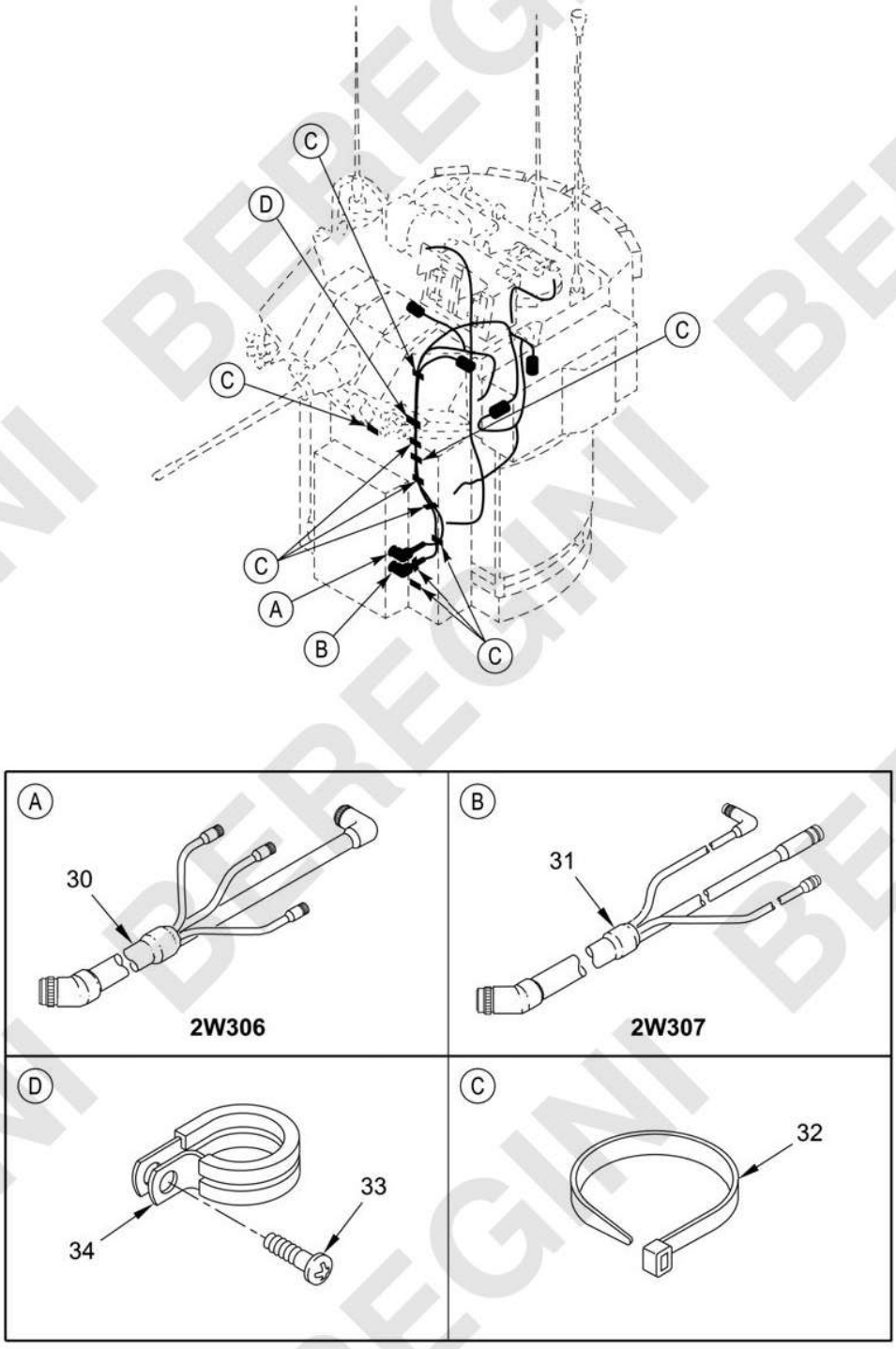

Figure 272. Turret Electrical Instl (Harness) (FTEA) - 13024689
(Sheet 4 of 9)

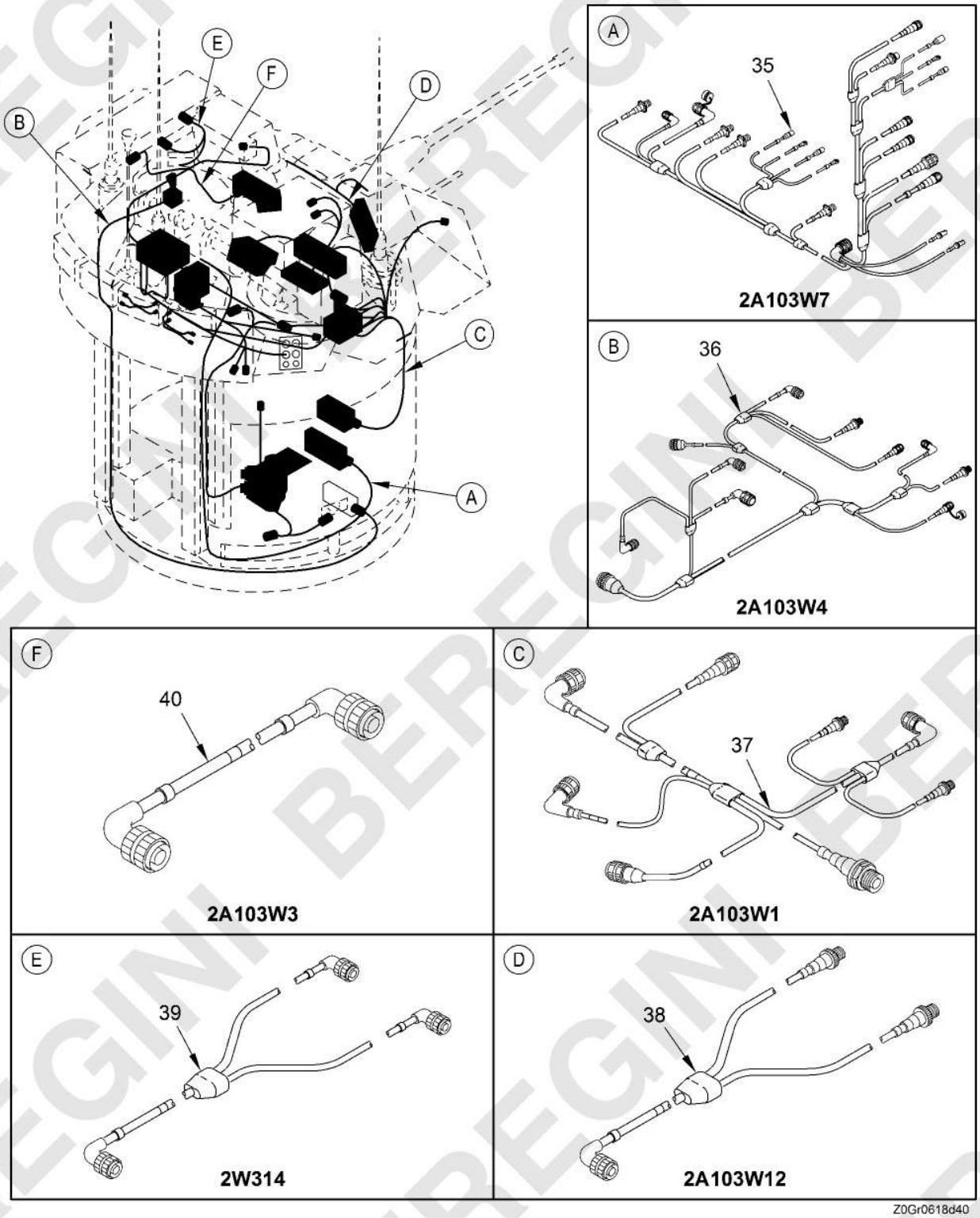

Figure 272. Turret Electrical Instl (Harness) (FTEA) - 13024689
(Sheet 5 of 9)

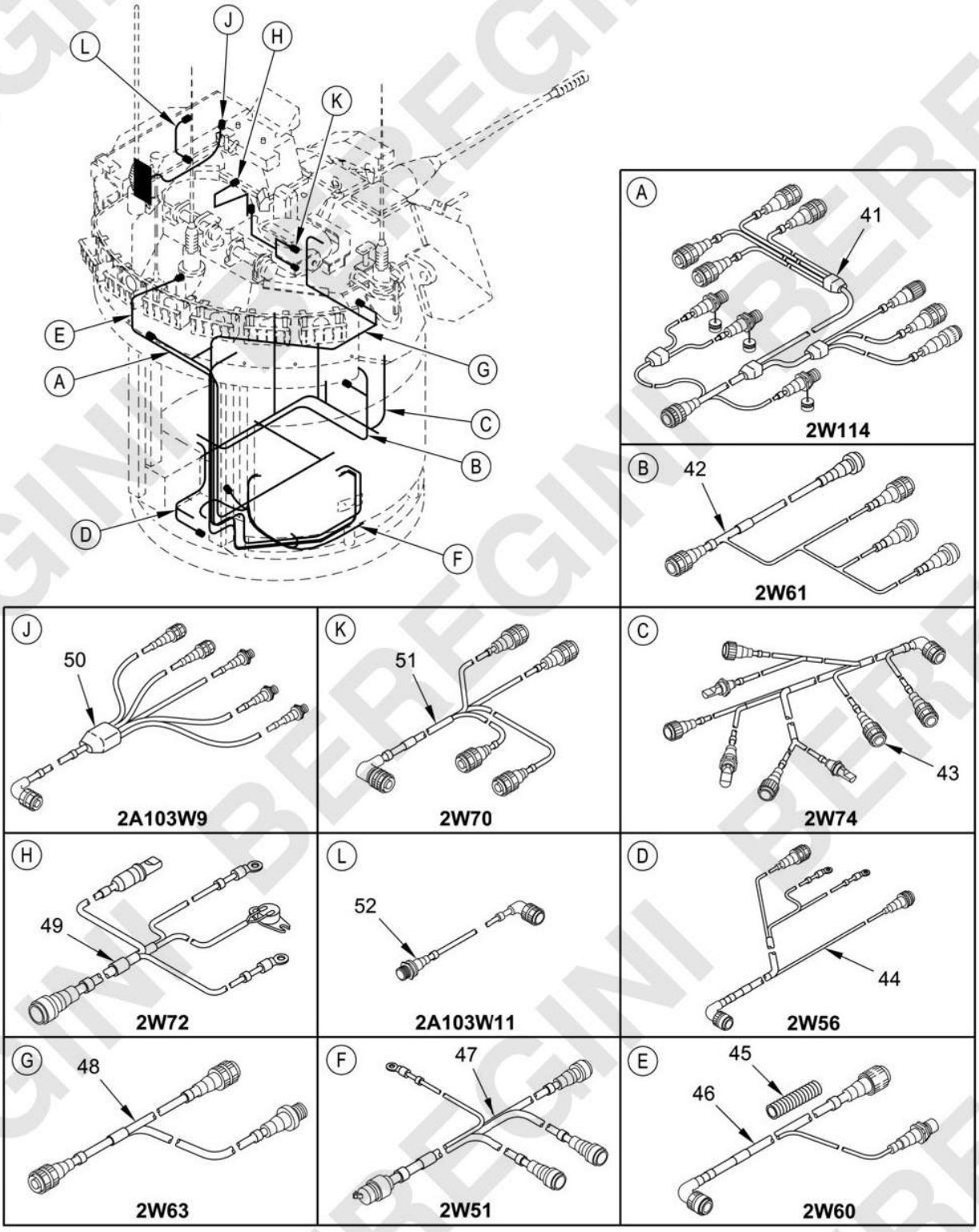

Figure 272. Turret Electrical Instl (Harness) (FTEA) - 13024689
(Sheet 6 of 9)

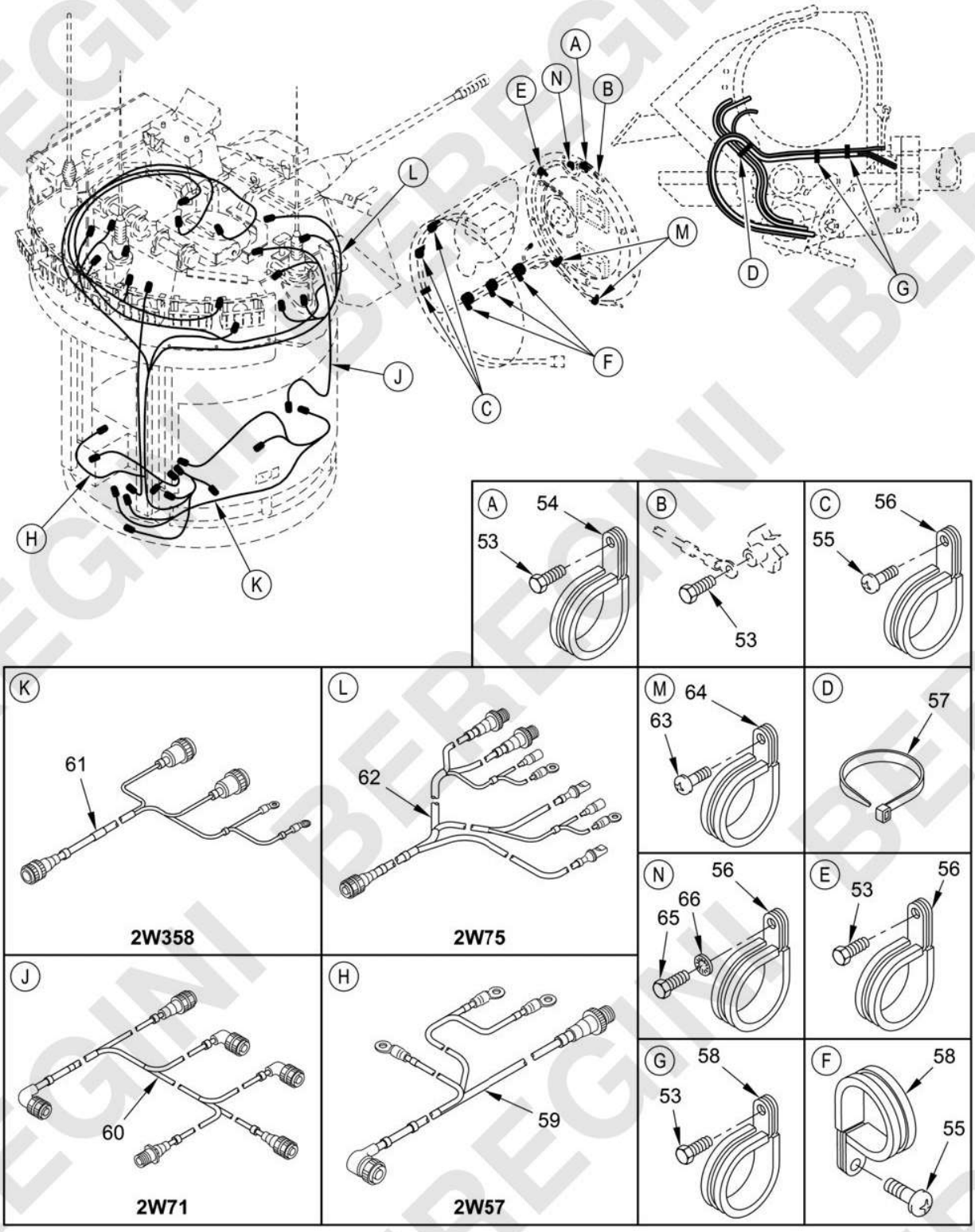

Figure 272. Turret Electrical Instl (Harness) (FTEA) - 13024689
(Sheet 7 of 9)

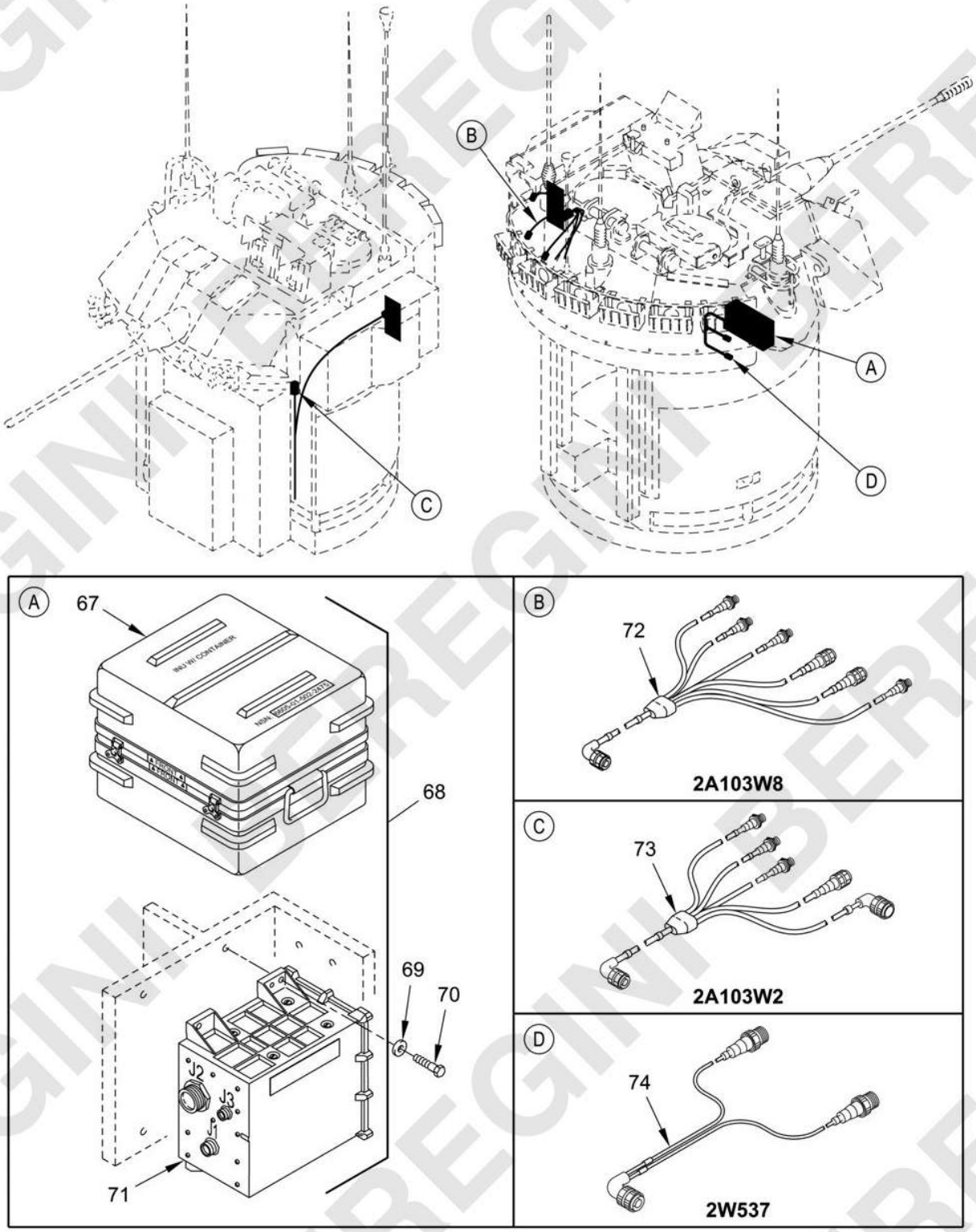

Figure 272. Turret Electrical Instl (Harness) (FTEA) - 13024689
(Sheet 8 of 9)

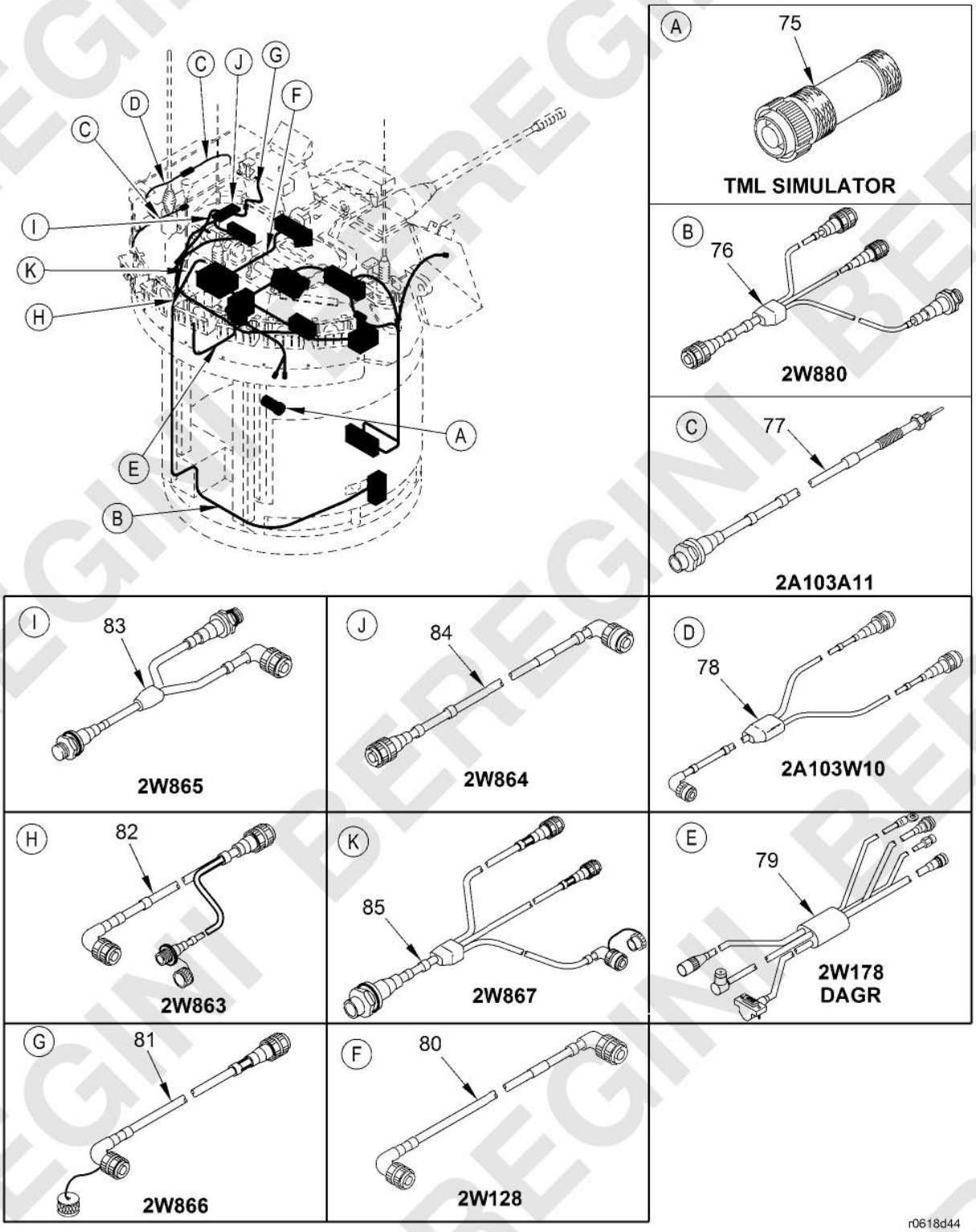

Figure 272. Turret Electrical Instl (Harness) (FTEA) - 13024689
(Sheet 9 of 9)

(1) ITEM NO.	(2) SMR CODE	(3) NSN	(4) CAGEC	(5) PART NUMBER	(6) DESCRIPTION AND USABLE ON CODE (UOC)	(7) QTY
					GROUP FTEA TURRET ELECTRICAL INSTL	
					FIGURE 272 Turret Electrical Instl (Harness) (FTEA) - 13024689	
1	PAFZZ	5995-01-113-3778	19207	12292803-4	CABLE ASSEMBLY,SPEC 2W304	1
2	PAFZZ	5995-01-114-0117	19207	12292803-5	CABLE ASSEMBLY,SPEC 2W305	1
3	PAFZZ	5995-01-463-4254	19200	12956574	WIRING HARNESS,BRAN 2W62	1
4	PAFZZ	5995-01-668-9394	19200	13020316-1	WIRING HARNESS,BRAN 2W54DBF	1
5	PAFZZ	5340-01-565-5491	81349	D38999/32M09N	COVER,PROTECTIVE,DU	2
6	PAFZZ	5935-01-481-5247	06090	D-600-0174	.DUMMY CONNECTOR,PLU	1
7	PAFZZ	5995-01-463-2113	076M6	12956591	WIRING HARNESS,BRAN 2W54C	1
8	PAFZZ	5995-01-463-3134	19207	12292803-13	CABLE ASSEMBLY,SPEC 2W351	1
9	PAFZZ	5995-01-195-0153	19207	12292803-11	CABLE ASSEMBLY,SPEC 2W311	1
10	PAFZZ	5995-01-463-1482	076M6	12976491	WIRING HARNESS,BRAN 2W79	1
11	PAFZZ	5995-01-463-1517	19200	12976492	WIRING HARNESS 2W80	1
12	PAFZZ	5995-01-668-5353	19200	13020317-1	WIRING HARNESS,BRAN 2W55DBF UOC: BSA	1
13	PAFZZ	5935-01-494-8038	06090	D-600-0175	.DUMMY CONNECTOR,PLU	1
14	PAHZZ	5995-01-463-2022	19200	12956593	WIRING HARNESS,HARN 2W55C	1
15	PAFZZ	6150-01-473-1579	19200	12986264	CABLE ASSEMBLY,POWE 2W83	1
16	PAFZZ	5995-01-472-9271	19200	12956599	CABLE ASSEMBLY,POWE 2W84	1
17	PAFZZ	5995-01-472-9286	19200	12956600	CABLE ASSEMBLY,POWE 2W85	1
18	PAFZZ	5995-01-472-9762	19200	12956603	CABLE ASSEMBLY,SPEC 2W88	1
19	PAFZZ	5995-01-472-9746	19200	12956602	CABLE ASSEMBLY,SPEC 2W87	1
20	PAFZZ	5995-01-472-9616	19200	12956601	CABLE ASSEMBLY,POWE 2W86	1
21	PAFZZ	6150-01-463-4328	19207	12465367-2	CABLE ASSEMBLY,SPEC 2W21	2
22	PAFZZ	5995-01-463-3510	19200	12956565	WIRING HARNESS,BRAN 2W53	1
23	PAFZZ	6150-01-492-1843	19200	12991955	CABLE ASSEMBLY,SPEC 2W117	1
24	PAFZZ	5995-01-580-2381	19200	13024702	WIRING HARNESS,BRAN 2W825 UOC: BSA	1
25	PAFZZ	5995-01-646-1042	19200	13038592	WIRING HARNESS 2W315 UOC: BSA	1
26	PAFZZ	5995-01-621-8136	19200	13024704-1	CABLE ASSEMBLY,SPEC 2W827 UOC: BSA	1
27	PAFZZ	5995-01-589-4335	19200	13023287	WIRING HARNESS 2W551 UOC: BSA	1
28	PAFZZ	5995-01-513-3333	19200	12986675	CABLE ASSEMBLY,RADI 2W67BF	1

(1) ITEM NO.	(2) SMR CODE	(3) NSN	(4) CAGEC	(5) PART NUMBER	(6) DESCRIPTION AND USABLE ON CODE (UOC)	(7) QTY
29	PAFZZ	5995-01-580-2379	19200	13024701	WIRING HARNESS 2W824 UOC: BSA	1
30	PAFZZ	5995-01-592-4174	19200	13024914	CABLE ASSEMBLY,SPEC 2W306	1
31	PAFZZ	5995-01-462-9063	19200	12900604-1	CABLE ASSEMBLY,SPEC 2W307	1
32	PAFZZ	5975-00-156-3253	81343	MS3367-2-9	STRAP,TIEDOWN,ELECT	1
33	PAFZZ	5305-00-984-6210	80205	MS35206-263	SCREW,MACHINE UOC: BSA	1
34	PAFZZ	5340-00-515-0595	81343	AS21919WDG36	CLAMP,LOOP	1
35	PAFZZ	5995-01-593-2997	19200	13020312	WIRING HARNESS,BRAN 2A103W7	1
36	PAFZZ	5995-01-593-6030	19200	13020308	WIRING HARNESS,BRAN 3A103W4	1
37	PAFZZ	4720-01-299-7050	19200	13020315-1	WIRING HARNESS,BRAN 2A103W1	1
38	PAFZZ	5995-01-593-5500	19200	13020493	WIRING HARNESS,BRAN 2A103W12	1
39	PAFZZ	5995-01-622-5096	19200	13035116	WIRING HARNESS,BRAN 2W314	1
40	PAFZZ	5995-01-593-5459	19200	13020307	WIRING HARNESS,BRAN 2A103W3	1
41	PAFZZ	6150-01-492-4611	19200	12991948	WIRING HARNESS,BRAN 2W114	1
42	PAFZZ	5995-01-463-4154	19200	12956573	WIRING HARNESS,BRAN 2W61	1
43	PAFZZ	5995-01-463-1455	19200	12956609	WIRING HARNESS,BRAN 2W74	1
44	PAFZZ	5995-01-463-3806	19200	12956568	WIRING HARNESS,BRAN	1
45	MFFZZ		81349	M81914/4-1110	TUBING,NONMETALLIC MAKE FROM TUBING P/N M81914/4-1110 (81349)	1
46	PAFZZ	5995-01-463-4125	19200	12956572	WIRING HARNESS,BRAN 2W60	1
47	PAFZZ	5995-01-463-1556	19200	12956544	WIRING HARNESS,BRAN 2W51	1
48	PAFZZ	5995-01-463-5352	19200	12956575	WIRING HARNESS,BRAN 2W62 USED W/ TPU II	1
49	PAFZZ	6150-01-486-6716	19200	12991927	CABLE ASSEMBLY,SPEC 2W72	1
50	PAFZZ	5995-01-593-5522	19200	13020314	WIRING HARNESS,BRAN 2A103W9	1
51	PAFZZ	5995-01-462-6430	19200	12956611-2	WIRING HARNESS,BRAN 2W70	1
52	PAFZZ	5995-01-593-5479	19200	13020323	WIRING HARNESS 2A103W11	1
53	PAFZZ	5305-00-071-2506	05047	AES01C250500AW9A91	SCREW,CAP,HEXAGON H UOC: BSA	6
54	PAFZZ	5340-00-809-1490	80205	MS21333-98	CLAMP,LOOP	6
55	PAFZZ	5305-00-988-1722	96906	MS35206-278	SCREW,MACHINE	6
56	PAFZZ	5340-00-088-1254	80205	MS21333-104	CLAMP,LOOP	5
57	PAFZZ	5975-00-451-5001	81343	MS3367-3-9	STRAP,TIEDOWN,ELECT	1
58	PAFZZ	5995-01-463-2034	19200	12956610	WIRING HARNESS,BRAN 2W75	1
59	PAFZZ	5995-01-463-3971	19200	12956569	WIRING HARNESS,BRAN 2W57	1

(1) ITEM NO.	(2) SMR CODE	(3) NSN	(4) CAGEC	(5) PART NUMBER	(6) DESCRIPTION AND USABLE ON CODE (UOC)	(7) QTY
60	PAFZZ	5995-01-463-2396	19200	12956608	WIRING HARNESS,BRAN 2W71	1
61	PAFZZ	5340-00-809-1500	80205	MS21333-107	CLAMP,LOOP UOC: BSA	6
62	PAFZZ	5305-00-988-1723	80205	MS35206-279	SCREW,MACHINE	2
63	PAFZZ	5340-00-177-3735	80205	NAS1715D20NH	CLAMP,LOOP	2
64	PAFZZ	5305-00-071-2508	05047	AES01C250378AW9A91	SCREW,CAP,HEXAGON H UOC: BSA	1
65	PAFZZ	5310-00-550-1130	80205	MS35333-40	WASHER,LOCK UOC: BSA	1
66	PAFZZ	5995-01-463-2403	19200	12956606	WIRING HARNESS,BRAN 2W358	1
67	PAFKK	8145-01-502-2474	60415	8327	.SHIPPING AND STORAG	1
68	PAFKK	6605-01-563-6713	19200	13015247	INU AND CONTAINER 2A407	1
69	PAFZZ	5310-00-149-9146	96906	MS20002C6	WASHER,RECESSED UOC: BSA	7
70	PAFZZ	5305-00-543-2419	05047	AES01C375A12AW9A91	SCREW,CAP,HEXAGON H	4
71	XAFKK		19200	13060512	.INERTIAL NAVIGATION	1
72	PAFZZ	5995-01-593-3073	19200	13020313	WIRING HARNESS,BRAN 2A103W8	1
73	PAFZZ	5995-01-593-2915	19200	13020311	WIRING HARNESS,BRAN 2A103W2	1
74	PAFZZ	6150-01-501-3151	19200	12986678	CABLE ASSEMBLY,SPEC 2W537	1
75	PAFZZ	5935-01-616-2726	06324	733-002	DUMMY CONNECTOR,PLU	1
76	PAFZZ	6150-01-672-0180	19200	13045920	WIRING HARNESS,BRAN 2W880 UOC: BSA	1
77	PAFZZ		19200	13060514	CABLE ASSEMBLY,SPEC	2
78	PAFZZ		19200	13060513	WIRING HARNESS,BRAN 2A103W10	1
79	PAFZZ	5995-01-592-8450	19200	13020436	WIRING HARNESS,BRAN 2W178	1
80	PAFZZ	5995-01-542-5214	19200	13007307	WIRING HARNESS 2W128	1
81	PAFZZ	6150-01-671-9657	19200	13045917	WIRING HARNESS 2W866 UOC: BSA	1
82	PAFZZ	6150-01-672-0182	19200	13045914	WIRING HARNESS,BRAN 2W863 UOC: BSA	1
83	PAFZZ	6150-01-672-0177	19200	13045916	WIRING HARNESS,BRAN 2W865 UOC: BSA	1
84	PAFZZ	6150-01-672-4996	19200	13045915	WIRING HARNESS,SPEC 2W864 UOC: BSA	1
85	PAFZZ	6150-01-672-0179	19200	13045918	WIRING HARNESS,BRAN 2W867 UOC: BSA	1
					END OF FIGURE	

0273-13/14 blank

BEREGINI BEREGINI BEREGINI

MAINTAINER

TURRET ELECTRICAL INSTL (GUNNERS) (FTEA) - 12956543-2

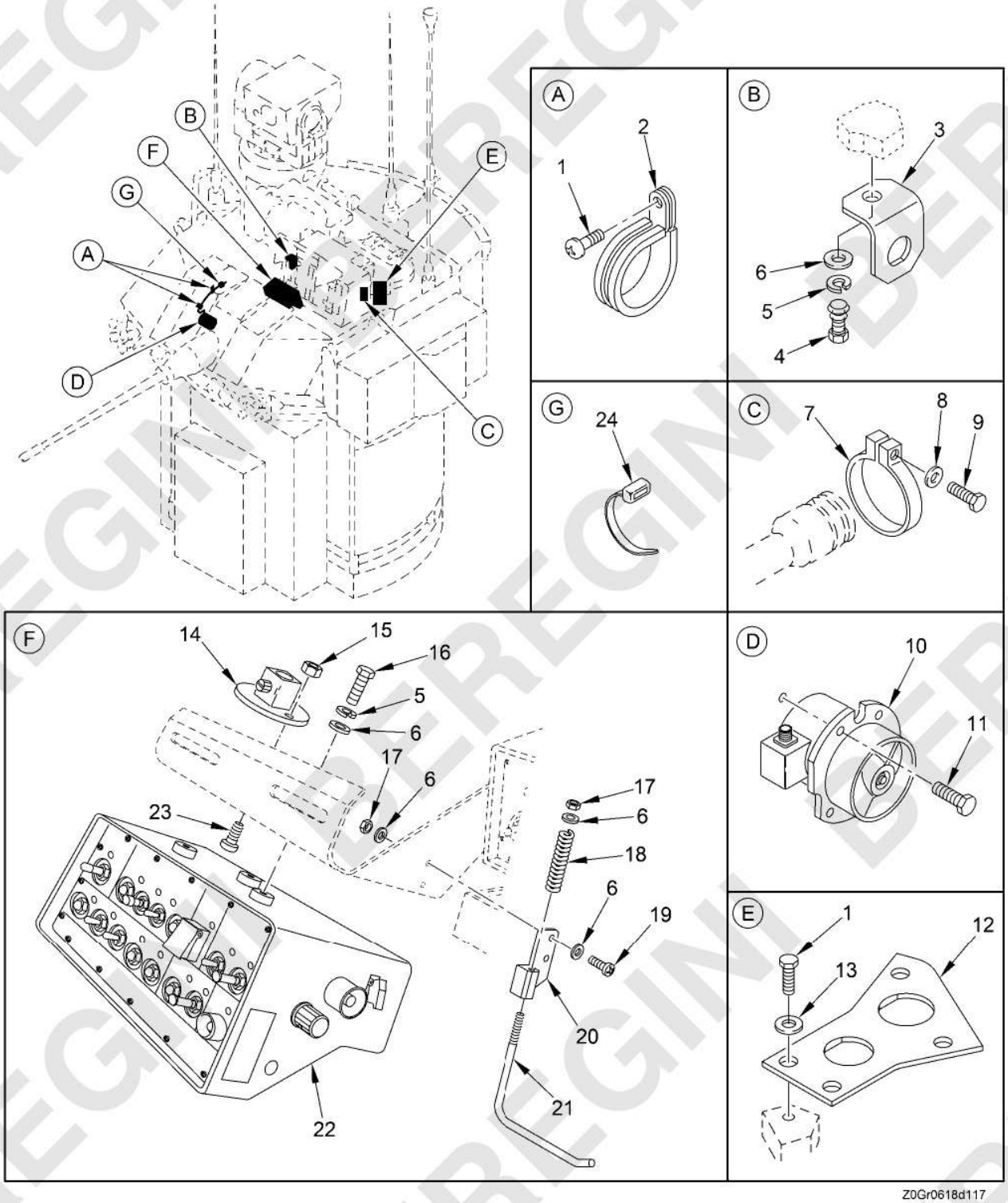

Figure 274. Turret Electrical Instl (Gunners) (FTEA) - 12956543-2
(Sheet 1 of 3)

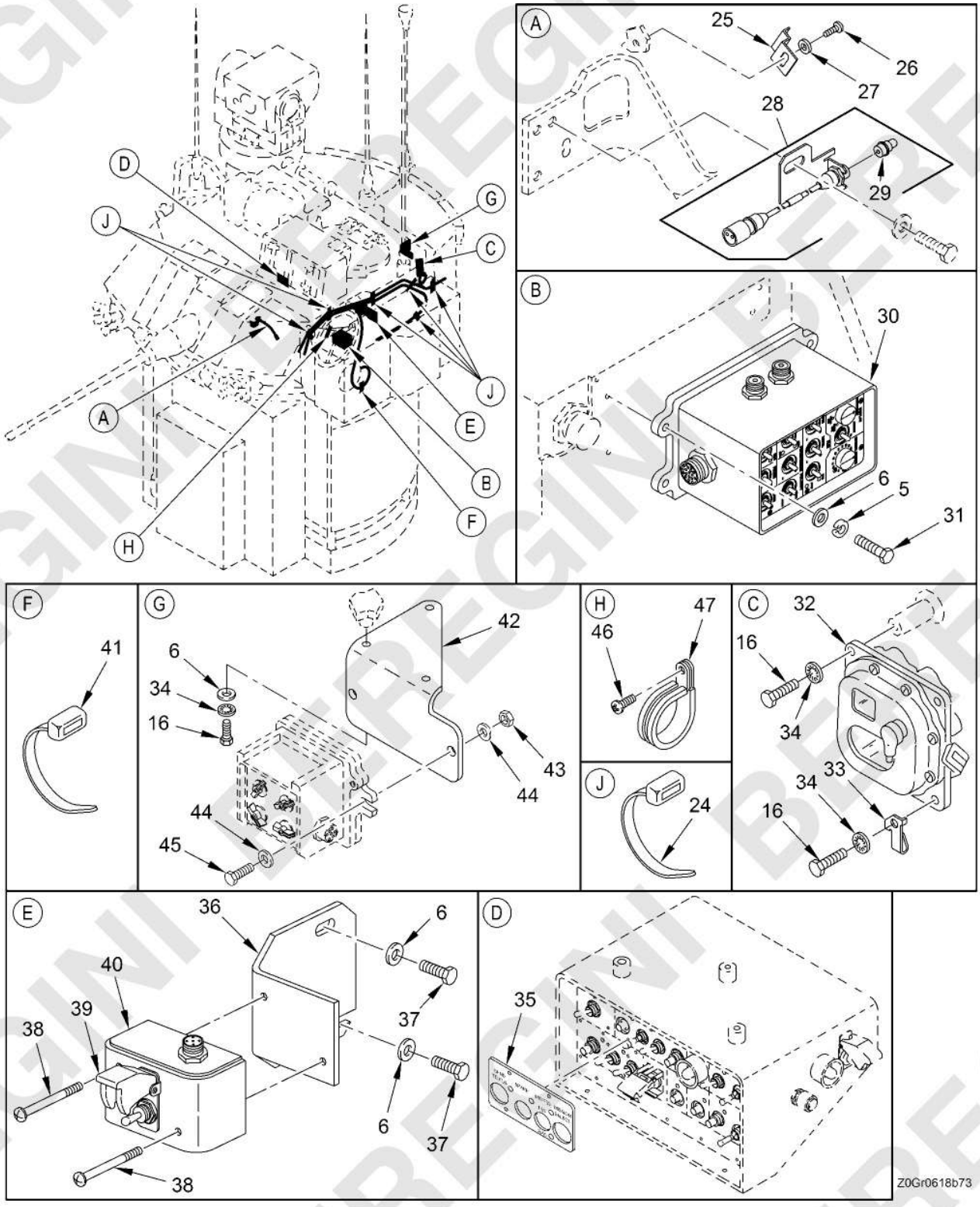

Figure 274. Turret Electrical Instl (Gunners) (FTEA) - 12956543-2
(Sheet 2 of 3)

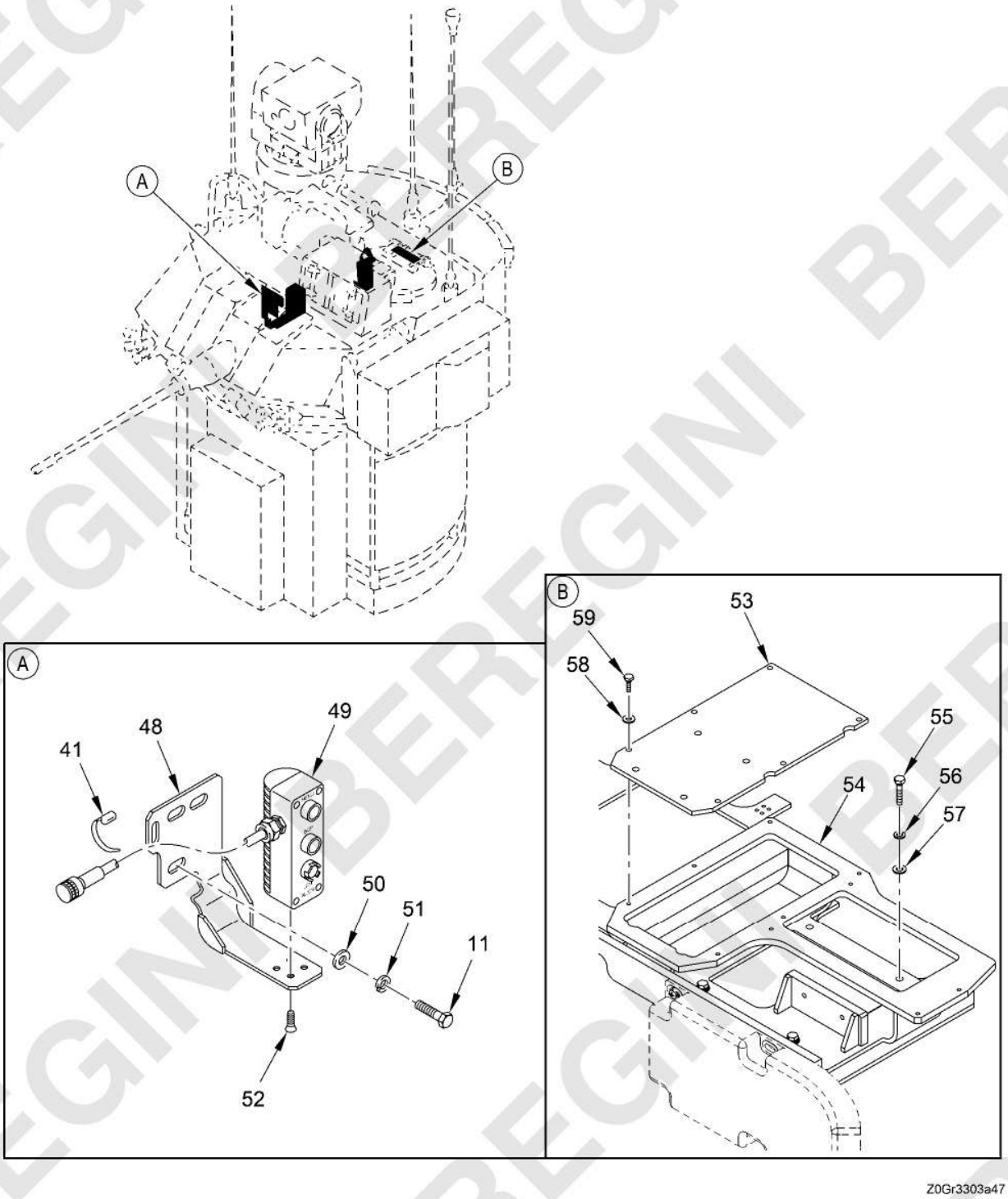

Figure 274. Turret Electrical Instl (Gunners) (FTEA) - 12956543-2
(Sheet 3 of 3)

(1) ITEM NO.	(2) SMR CODE	(3) NSN	(4) CAGEC	(5) PART NUMBER	(6) DESCRIPTION AND USABLE ON CODE (UOC)	(7) QTY
					GROUP FTEA TURRET ELECTRICAL INSTL	
					FIGURE 274 Turret Electrical Instl (Gunners) (FTEA) - 12956543-2	
1	PAFZZ	5305-00-071-2506	05047	AES01C250500AW9A91	SCREW,CAP,HEXAGON H ..... UOC: [redacted]	6
2	PAFZZ	5340-00-809-1490	80205	MS21333-98	CLAMP,LOOP	2
3	PAFZZ	5340-01-464-2475	19200	12976760	BRACKET,ANGLE ..... UOC: [redacted]	4
4	PAFZZ	5305-00-071-2505	80204	B1821BH025C088N	SCREW,CAP,HEXAGON H ..... UOC: [redacted]	5
5	PAFZZ	5310-00-582-5965	80205	MS35338-44	WASHER,LOCK ..... UOC: [redacted]	9
6	PAFZZ	5310-00-809-4058	96906	MS27183-10	WASHER,FLAT ..... UOC: [redacted]	18
7	PAFZZ	5340-01-174-9259	19207	12317066	CLAMP,LOOP	1
8	PAFZZ	5310-00-823-8804	96906	MS27183-9	WASHER,FLAT	4
9	PAFZZ	5306-01-183-9265	80205	NAS6604L9	BOLT,SELF-LOCKING	1
10	PAFFF	4140-01-112-8519	19207	12308376	FAN,VANEAXIAL 2A10,SEE FIG. 277 FOR BREAKDOWN.....	1
11	PAFZZ	5305-00-068-0509	80204	B1821BH025C125N	SCREW,CAP,HEXAGON H	2
12	PAFZZ	5340-01-526-6510	19200	12994824	PLATE,MOUNTING	1
13	PAFZZ	5310-00-865-9513	19207	10910174-1	WASHER,FLAT	4
14	PAFZZ	5340-01-237-7422	96906	MS17246-1	PLATE,MOUNTING	1
15	PAFZZ	5310-00-902-6676	80205	MS21083N3	NUT,SELF-LOCKING,HE	1
16	PAFZZ	5305-00-068-0508	05047	AES01C250750AW9A91	SCREW,CAP,HEXAGON H ..... UOC: [redacted]	10
17	PAFZZ	5310-00-088-1251	81349	M45913/1-4CG5Z	NUT,SELF-LOCKING,HE ..... UOC: [redacted]	3
18	PAFZZ	5360-01-481-5479	39428	9657K113	SPRING,HELICAL,COMP	1
19	PAFZZ	5305-00-988-1727	80205	MS35206-283	SCREW,MACHINE	5
20	PAFZZ	5340-01-505-4152	19200	12991996	HOUSING,LATCH	1
21	PAFZZ	5340-01-586-5541	19200	12976701-1	LATCH,MORTISE	1
22	PAFFF	1005-01-598-4401	19200	12992083-3	CONTROL BOX,ELECTRI 2A3, SEE TM 9-2350-406-23&P.....	1
23	PAFZZ	5305-00-989-7435	80205	MS35207-264	SCREW,MACHINE ..... UOC: [redacted]	2
24	PAFZZ	5975-00-451-5001	81343	MS3367-3-9	STRAP,TIEDOWN,ELECT	1

(1) ITEM NO.	(2) SMR CODE	(3) NSN	(4) CAGEC	(5) PART NUMBER	(6) DESCRIPTION AND USABLE ON CODE (UOC)	(7) QTY
25	PAFZZ	5340-01-464-2471	19200	12976791	BRACKET,MOUNTING	1
26	PAFZZ	5305-00-984-6210	80205	MS35206-263	SCREW,MACHINE UOC: [redacted]	1
27	PAFZZ	5310-00-014-5850	96906	MS27183-42	WASHER,FLAT UOC: [redacted]	1
28	PAFFF	6220-01-458-4368	19200	12976787	LIGHT,INDICATOR	1
29	PAFZZ	6240-00-763-7744	81349	M6363/8-7	.LAMP,INCANDESCENT	1
30	PAFKK	5895-01-598-7688	06085	12992093-3	CONTROL PANEL,GUNNE 2A108,SEE TM 9-2350-406-23&P	1
31	PAFZZ	5305-00-225-3842	05047	AES01C250A12AW9A91	SCREW,CAP,HEXAGON H	5
32	PAFZZ	3040-01-185-5888	19207	12329033-5	CONNECTING LINK,RIG 2A16,2A17,SEE FIG. 276 FOR BREAKDOWN	1
33	PAFZZ	1005-01-166-9652	19207	12308954	HOOK,HELMET	1
34	PAFZZ	5310-00-550-1130	80205	MS35333-40	WASHER,LOCK UOC: [redacted]	4
35	PAFZZ	1290-01-632-0814	19200	13038593	PANEL,CONTROL,ELECT	1
36	PAFZZ	5340-01-501-5622	19200	12991930	BRACKET,MOUNTING	1
37	PAFZZ	5305-00-068-7837	05047	AEB02C250625WA6AA1	SCREW,CAP,HEXAGON H	2
38	PAFZZ	5305-00-958-0585	96906	MS35207-272	SCREW,MACHINE	2
39	PAFZZ	5930-01-501-9216	19200	12991950	GUARD,SWITCH	1
40	PAFZZ	5930-01-500-9516	19200	12991987	SWITCH,TOGGLE 2A40	1
41	PAFZZ	5975-00-156-3253	81343	MS3367-2-9	STRAP,TIEDOWN,ELECT	1
42	PAFZZ	5340-01-464-3725	19200	12976608	BRACKET UOC: [redacted]	1
43	PAFZZ	5310-00-984-3806	81349	M45913/1-5CG5C	NUT,SELF-LOCKING,HE UOC: [redacted]	2
44	PAFZZ	5310-00-087-7493	96906	MS27183-13	WASHER,FLAT UOC: [redacted]	4
45	PAFZZ	5306-00-226-4830	80204	B1821BH031C138N	SCREW,CAP,HEXAGON H UOC: [redacted]	2
46	PAFZZ	5305-00-988-1723	80205	MS35206-279	SCREW,MACHINE	1
47	PAFZZ	5340-00-809-1500	80205	MS21333-107	CLAMP,LOOP UOC: [redacted]	6
48	PAFZZ	5340-01-590-2223	19200	13020444	BRACKET,ANGLE	1
49	PAFZZ	6130-01-587-6330	19200	13020348	CONTROL,POWER SUPPL	1
50	PAFZZ	5310-00-773-7618	80205	MS15795-814	WASHER,FLAT UOC: [redacted]	3
51	PAFZZ	5310-00-004-5033	80205	MS35338-46	WASHER,LOCK UOC: [redacted]	3

(1) ITEM NO.	(2) SMR CODE	(3) NSN	(4) CAGEC	(5) PART NUMBER	(6) DESCRIPTION AND USABLE ON CODE (UOC)	(7) QTY
52	PAFZZ	5305-01-613-0244	80205	MS24667-13ZL	SCREW,CAP,SOCKET HE	4
53	PAFZZ	1005-01-675-2013	19200	13061626	PLATE, ADAPTER UOC: [redacted]	1
54	PAFZZ	2510-01-675-3136	19200	13072154	TRAY, SUPPORT UOC: [redacted]	1
55	PAFZZ	5306-00-226-4830	80204	B1821BH031C138N	BOLT, MACHINE UOC: [redacted]	4
56	PAFZZ	5310-00-625-5756	80205	MS15795-812	WASHER, FLAT UOC: [redacted]	4
57	PAFZZ	5310-00-974-6623	80205	MS35338-140	WASHER, LOCK UOC: [redacted]	4
58	PAFZZ	5310-00-582-5677	80205	MS15795-810	WASHER, FLAT UOC: [redacted]	6
59	PAFZZ	5305-00-068-0508	05047	A3S01C250750AW9A91	SCREW,CAP,HEXAGON HEAD UOC: [redacted]	6
					END OF FIGURE	

BEREGINI BEREGINI BEREGINI

MAINTAINER

TURRET ELECTRICAL INSTL (COMMANDERS) (FTEA) - 12956543-2

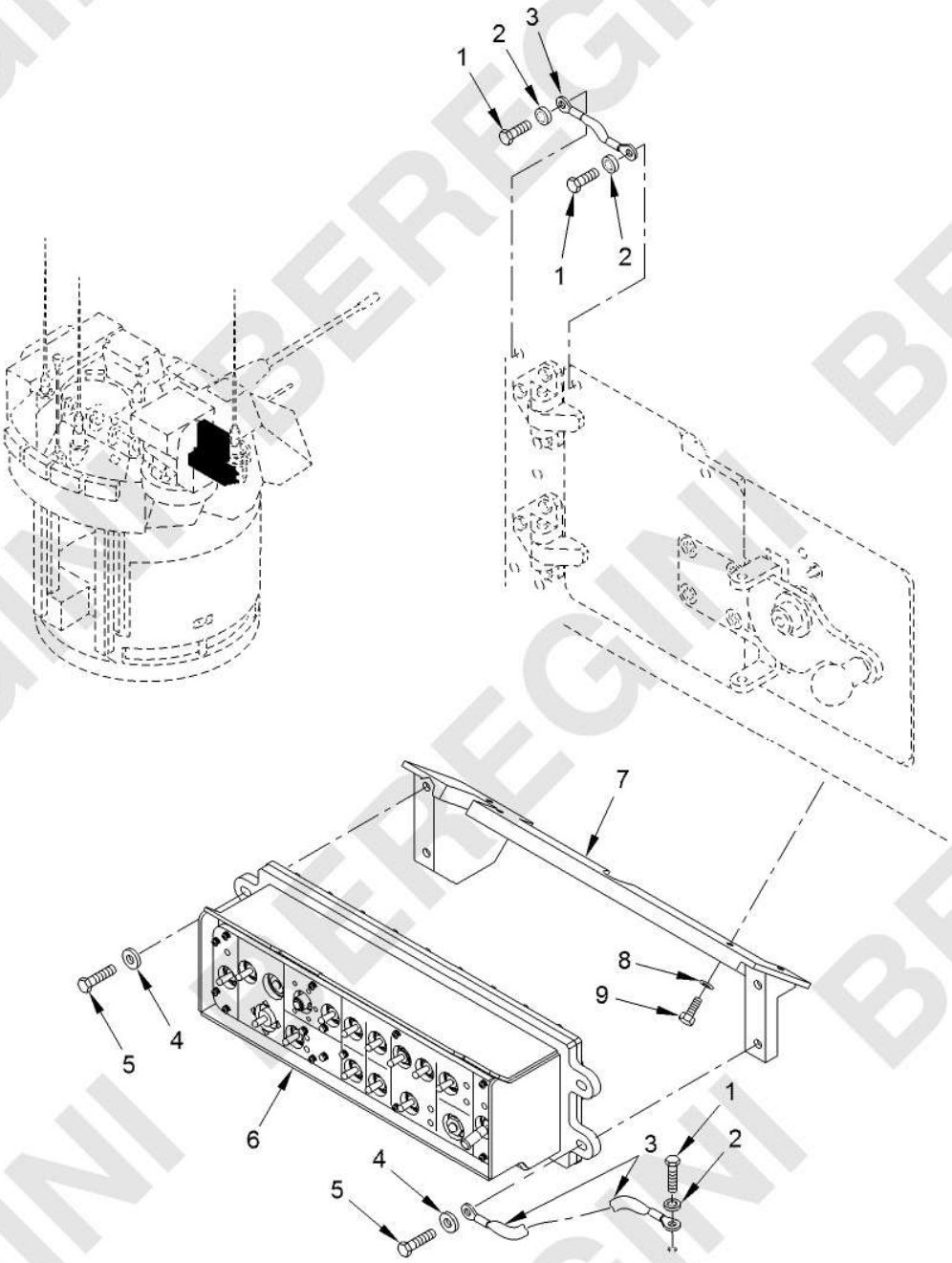

Figure 275. Turret Electrical Instl (Commanders) (FTEA) - 12956543-2
(Sheet 1 of 3)

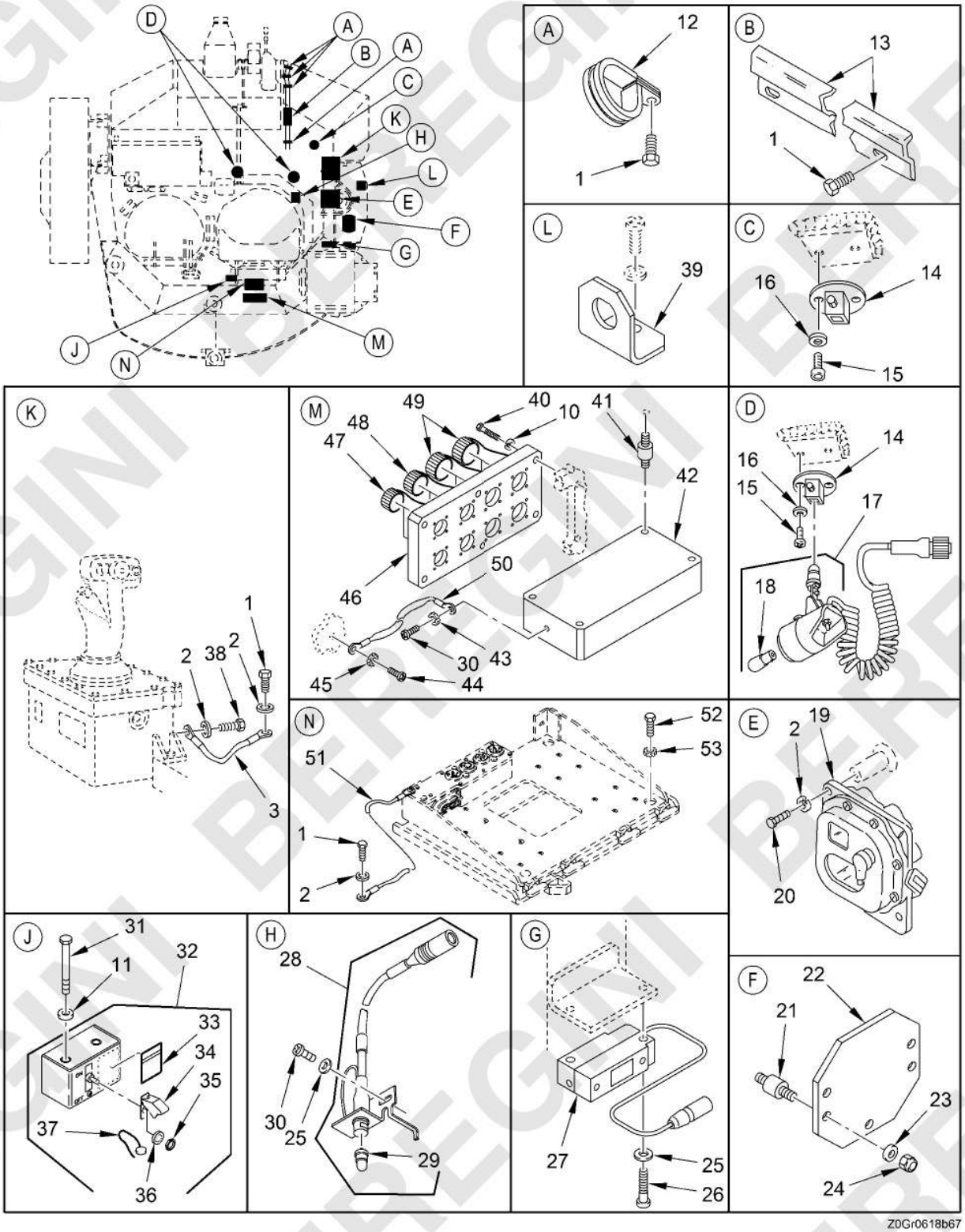

Figure 275. Turret Electrical Instl (Commanders) (FTEA) - 12956543-2
(Sheet 2 of 3)

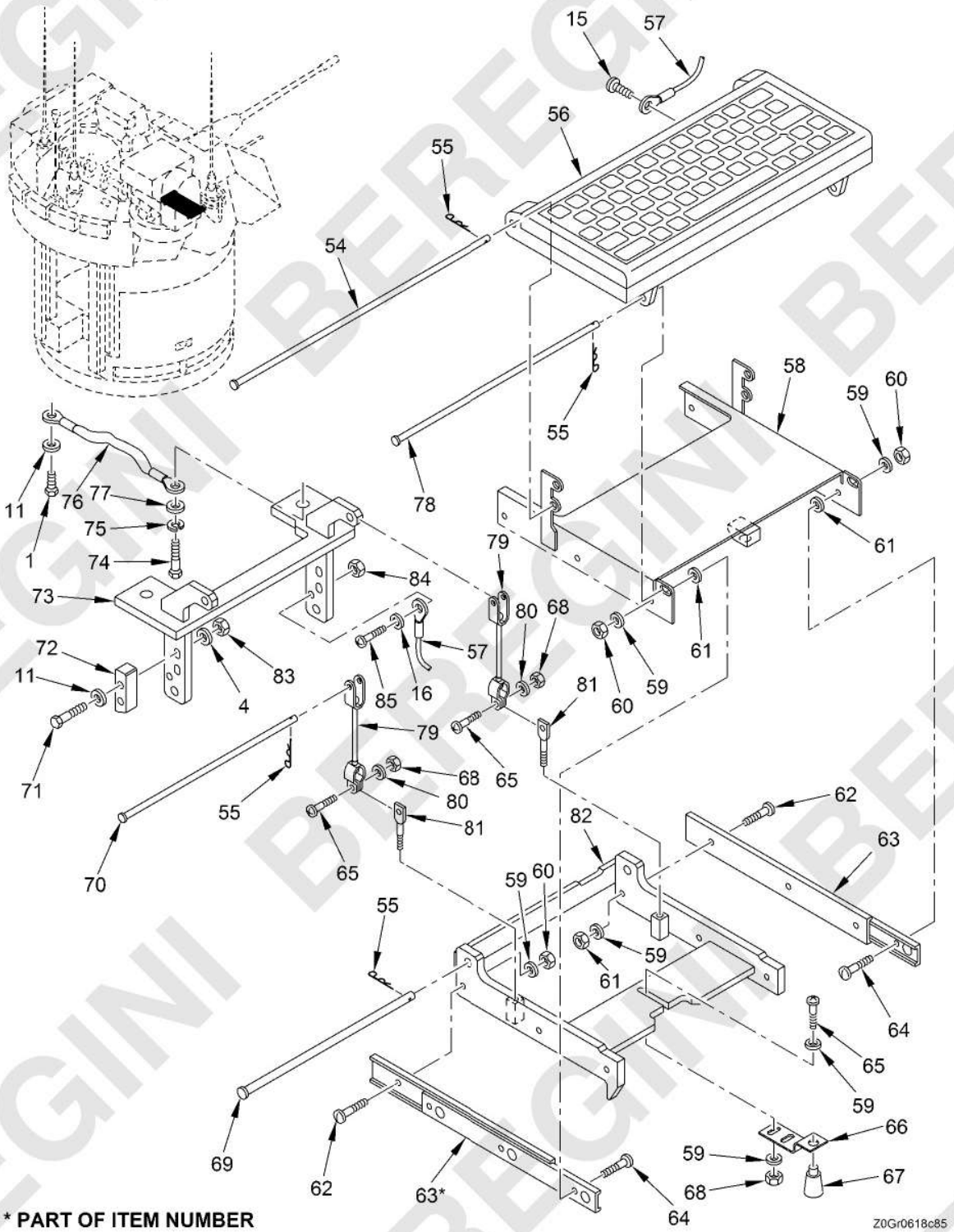

Figure 275. Turret Electrical Instl (Commanders) (FTEA) - 12956543-2
(Sheet 3 of 3)

(1) ITEM NO.	(2) SMR CODE	(3) NSN	(4) CAGEC	(5) PART NUMBER	(6) DESCRIPTION AND USABLE ON CODE (UOC)	(7) QTY
					GROUP FTEA TURRET ELECTRICAL INSTL	
					FIGURE 275 Turret Electrical Instl (Commanders) (FTEA) - 12956543-2	
1	PAFZZ	5305-00-071-2506	05047	AES01C250500AW9A91	SCREW,CAP,HEXAGON H ..... UOC: [redacted]	12
2	PAFZZ	5310-00-550-1130	80205	MS35333-40	WASHER,LOCK ..... UOC: [redacted]	16
3	PAFZZ	5999-01-463-0569	19200	12976747	STRIP,ELECTRICAL GR	3
4	PAFZZ	5310-00-285-8124	96906	MS27183-50	WASHER,FLAT	4
5	PAFZZ	5305-00-071-2505	80204	B1821BH025C088N	SCREW,CAP,HEXAGON H ..... UOC: [redacted]	4
6	PAFHH	5895-01-458-4331	19200	12956549	CONTROL PANEL,COMMA 2A107,SEE TM 9-2350-406-23&P..... UOC: [redacted]	1
6	PAFKK	5895-01-574-1591	19200	12992085-1	CONTROL PANEL,COMMA 2A107,SEE TM 9-2350-406-23&P..... UOC: [redacted]	1
6	PAFKK	5895-01-598-7687	06085	12992085-3	CONTROL PANEL,COMMA 2A107.....	1
6	PAFKK	5895-01-541-8031	19200	12992085	CONTROL PANEL,COMMA 2A107,SEE TM 9-2350-406-23&P.....	1
7	PAFZZ	5340-01-544-2876	19200	12986298	BRACKET,CMDR PANEL	1
8	PAFZZ	5310-00-596-7599	80205	MS15795-514	WASHER,FLAT	4
9	PAFZZ	5305-00-068-0510	80204	B1821BH038C100N	SCREW,CAP,HEXAGON H	4
10	PAFZZ	5310-00-582-5965	80205	MS35338-44	WASHER,LOCK ..... UOC: [redacted]	6
11	PAFZZ	5310-00-809-4058	96906	MS27183-10	WASHER,FLAT ..... UOC: [redacted]	8
12	PAFZZ	5340-00-809-1490	80205	MS21333-98	CLAMP,LOOP	4
13	PAFZZ	5975-01-115-3003	19207	12293171	PROTECTOR,ELECTRICA	1
14	PAFZZ	5340-01-237-7422	96906	MS17246-1	PLATE,MOUNTING	3
15	PAFZZ	5305-00-984-6210	80205	MS35206-263	SCREW,MACHINE ..... UOC: [redacted]	7
16	PAFZZ	5310-00-576-5752	80205	MS35333-39	WASHER,LOCK	3
17	PAFFF	6230-01-237-2953	19200	9379604	LIGHT,EXTENSION 2A19.....	2
18	PAFZZ	6240-00-155-8714	96906	MS25231-313	.LAMP,INCANDESCENT ..... UOC: [redacted]	2
19	PAFZZ	3040-01-185-5888	19207	12329033-5	CONNECTING LINK,RIG 2A16,2A17,SEE FIG. 280 FOR BREAKDOWN.....	1

(1) ITEM NO.	(2) SMR CODE	(3) NSN	(4) CAGEC	(5) PART NUMBER	(6) DESCRIPTION AND USABLE ON CODE (UOC)	(7) QTY
20	PAFZZ	5305-00-068-0508	05047	AES01C250750AW9A91	SCREW,CAP,HEXAGON H ..... UOC: [redacted]	4
21	PAFZZ	5340-01-152-2967	19207	12293273	MOUNT,RESILIENT ..... UOC: [redacted]	3
22	PAFZZ	5340-01-110-4049	19207	12297362	PLATE,MOUNTING ..... UOC: [redacted]	1
23	PAFZZ	5310-00-081-4219	96906	MS27183-12	WASHER,FLAT	3
24	PAFZZ	5310-00-984-3806	81349	M45913/1-5CG5C	NUT,SELF-LOCKING,HE ..... UOC: [redacted]	3
25	PAFZZ	5310-00-014-5850	96906	MS27183-42	WASHER,FLAT ..... UOC: [redacted]	2
26	PAFZZ	5305-00-995-3441	80205	MS35207-269	SCREW,MACHINE	2
27	PAFFF	5895-01-157-3077	19207	12295082-3	INDICATOR CONTROL S	1
28	PAFFF	6210-01-206-0138	19207	12328624-1	LIGHT,INDICATOR	1
29	PAFZZ	6240-00-763-7744	81349	M6363/8-7	.LAMP,INCANDESCENT	1
30	PAFZZ	5305-01-299-9534	80205	MS35206-261	SCREW,MACHINE	5
31	PAFZZ	5305-00-071-2515	80204	B1821BH025C300N	SCREW,CAP,HEXAGON H	2
32	PAFZZ	5930-01-324-2220	19200	9380973	SWITCH ASSEMBLY 2A46.....	1
33	PAFZZ	7690-01-481-6825	19200	12987584	.MARKER,IDENTIFICATI	1
34	PAFZZ	5930-00-617-9718	96906	MS25224-3	.GUARD,SWITCH ..... UOC: [redacted]	1
35	PAFZZ	5310-01-139-1427	96906	MS21340-04	.NUT,PLAIN,HEXAGON	1
36	PAFZZ	5310-01-078-9699	80205	MS35333-136	.WASHER,LOCK	1
37	PAFZZ	4010-00-835-9815	19207	8720150	.SEAL,ANTIPILFERAGE	1
38	PAFZZ	5305-00-267-8952	80204	B1821BH025F050N	SCREW,CAP,HEXAGON H	1
39	PAFZZ	5340-01-464-2475	19200	12976760	BRACKET,ANGLE ..... UOC: [redacted]	4
40	PAFZZ	5305-00-978-9379	96906	MS16997-59	SCREW,CAP,SOCKET HE ..... UOC: [redacted]	6
41	PAFZZ	5342-01-199-2349	76005	SMB006-0200-9	MOUNT,RESILIENT	4
42	PAFKK	7025-01-587-3576	19200	13020198	INTERFACE BOX II ET ETDIB-2.....	1
43	PAFZZ	5310-00-080-9786	96906	MS45904-60	WASHER,LOCK ..... UOC: [redacted]	1
44	PAFZZ	5305-00-988-1723	80205	MS35206-279	SCREW,MACHINE	1
45	PAFZZ	5310-00-082-0650	96906	MS45904-70	WASHER,LOCK ..... UOC: [redacted]	1
46	PAFZZ	5340-01-474-0767	19200	12976779	PLATE,MOUNTING	1
47	PAFZZ	5935-01-462-9312	81349	D38999/33M11N	COVER,ELECTRICAL CO	2
48	PAFZZ	5935-01-475-2449	81349	D38999/33M13N	CONNECTOR,RECEPTACL	2

(1) ITEM NO.	(2) SMR CODE	(3) NSN	(4) CAGEC	(5) PART NUMBER	(6) DESCRIPTION AND USABLE ON CODE (UOC)	(7) QTY
49	PAFZZ	5935-01-471-1007	81349	D38999/33M15N	COVER,ELECTRICAL CO	4
50	PAFZZ	6150-00-722-5707	81349	M83413/8-A005BC	LEAD,ELECTRICAL	1
51	PAFZZ	5999-01-464-6010	19200	12976747-5	STRIP,ELECTRICAL GR	1
52	PAFZZ	5306-00-226-4827	05047	AEB02C312A00AW9A81	BOLT,MACHINE	4
53	PAFZZ	5310-00-514-6674	96906	MS35335-34	WASHER,LOCK	4
54	PAFZZ	5315-01-543-1720	19200	12976731	PIN	1
55	PAFZZ	5315-00-815-1405	80205	MS24665-151	PIN,COTTER	3
56	PAFKK	7025-01-581-6251	19200	13023329	DATA ENTRY TOOL 2A5	1
57	PAFZZ	6150-01-068-7926	91812	2583-5BB12	CABLE ASSEMBLY,SPEC UOC: [redacted]	1
58	PAFZZ	5340-01-464-2538	076M6	12976440	BRACKET,MOUNTING	1
59	PAFZZ	5310-00-765-3197	96906	MS27183-41	WASHER,FLAT UOC: [redacted]	14
60	PAFZZ	5310-00-811-3494	80205	MS21044N08	NUT,SELF-LOCKING,HE	12
61	PAFZZ	5310-00-141-1795	80205	NAS1149F0463P	WASHER,FLAT UOC: [redacted]	1
62	PAFZZ	5305-01-351-0882	39428	90283A194	SCREW,MACHINE	6
63	PAFZZ	5340-01-463-6227	06666	CLB-203-10	SLIDE SECTION,DRAWE	1
64	PAFZZ	5305-01-463-1025	39428	90283A199	SCREW,MACHINE	6
65	PAFZZ	5305-00-993-1848	80205	MS35207-265	SCREW,MACHINE	4
66	PAFZZ	5340-01-465-4631	19200	12976442	BRACKET,DOUBLE ANGL	1
67	PAFZZ	5340-01-369-6921	94222	56-99-238-20	PLUNGER,DETENT	1
68	PAFZZ	5310-00-877-5797	80205	MS21044N3	NUT,SELF-LOCKING,HE UOC: [redacted]	4
69	PAFZZ	5315-01-463-2626	19200	12976610	PIN,STRAIGHT,HEADED	1
70	PAFZZ	5315-01-463-2362	19200	12976504-2	PIN,STRAIGHT,HEADED	1
71	PAFZZ	5305-00-225-3841	05047	AES01C250A37AW9A91	SCREW,CAP,HEXAGON H	2
72	PAFZZ	5340-01-464-3377	19200	12976727	STOP,MECHANICAL	1
73	PAFZZ	5340-01-464-2576	19200	12976505	BRACKET,MOUNTING	1
74	PAFZZ	5305-01-140-9118	80204	B1821BH038C088N	SCREW,CAP,HEXAGON H UOC: [redacted]	4
75	PAFZZ	5310-00-004-5033	80205	MS35338-46	WASHER,LOCK UOC: [redacted]	2
76	PAFZZ	5999-01-463-1102	19200	12976747-2	STRIP,ELECTRICAL GR	1
77	PAFZZ	5310-00-080-6004	96906	MS27183-14	WASHER,FLAT	2
78	PAFZZ	5315-01-463-2361	19200	12976504-1	PIN,STRAIGHT,HEADED	1
79	PAFZZ	4010-01-463-1743	19200	12976732	WIRE ROPE ASSEMBLY,	2

(1) ITEM NO.	(2) SMR CODE	(3) NSN	(4) CAGEC	(5) PART NUMBER	(6) DESCRIPTION AND USABLE ON CODE (UOC)	(7) QTY
80	PAFZZ	5310-01-312-4959	96906	MS27183-47	WASHER,FLAT	2
81	PAFZZ	5306-01-236-1588	39428	90172A542	BOLT,EYE	2
82	PAFZZ	7040-01-462-8859	19200	12976441	KEYBOARD SUPPORT	1
83	PAFZZ	5310-00-088-1251	81349	M45913/1-4CG5Z	NUT,SELF-LOCKING,HE UOC: [redacted]	2
84	PAFZZ	5310-01-470-8821	96906	MS21044F-N3	NUT,SELF-LOCKING,HE	1
85	PAFZZ	5305-00-984-6211	80205	MS35206-264	SCREW,MACHINE UOC: [redacted]	1

END OF FIGURE

MAINTAINER

TURRET ELECTRICAL INSTL (TURRET DRIVE/BASKET) (FTEA) - 12956543-2

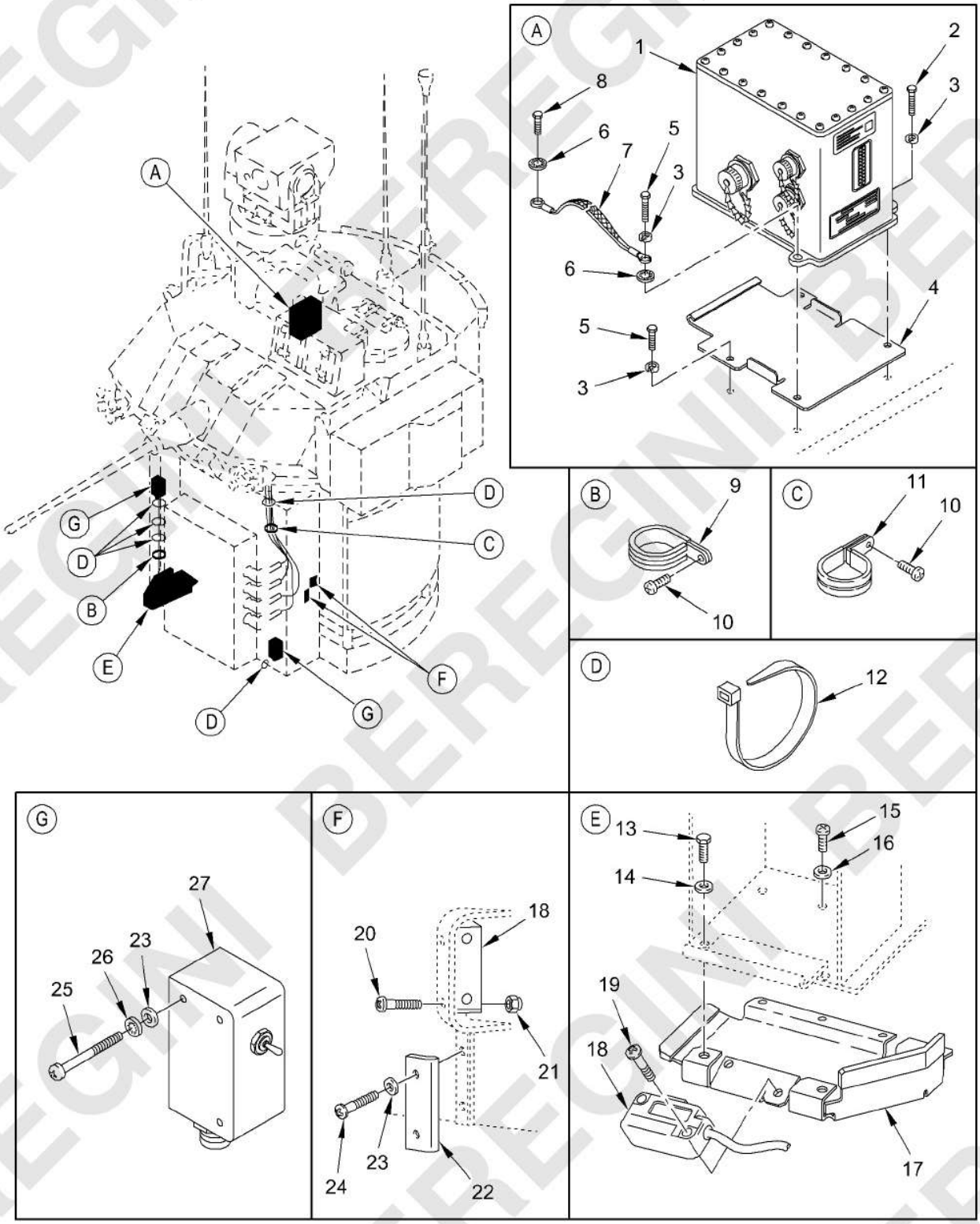

Figure 276. Turret Electrical Instl (Turret Drive/Basket) (FTEA) - 12956543-2

(1) ITEM NO.	(2) SMR CODE	(3) NSN	(4) CAGEC	(5) PART NUMBER	(6) DESCRIPTION AND USABLE ON CODE (UOC)	(7) QTY
					GROUP FTEA TURRET ELECTRICAL INSTL	
					FIGURE 276 Turret Electrical Instl (Turret Drive/Basket) (FTEA) - 12956543-2	
1	PAFKK	5999-01-587-7385	19200	12991956-1	SWITCH ASSEMBLY,SPE OPTIONAL W/ 12991956	1
1	PAFKK	5999-01-490-5102	19200	12991956	SWITCH ASSEMBLY,SPE OPTIONAL W/ 12991956-1	1
2	PAFZZ	5305-00-068-0509	80204	B1821BH025C125N	SCREW,CAP,HEXAGON H	2
3	PAFZZ	5310-00-582-5965	80205	MS35338-44	WASHER,LOCK UOC: [redacted]	4
4	PAFZZ	5340-01-492-3318	19200	12991962	PLATE,MOUNTING	1
5	PAFZZ	5305-00-225-3843	80204	B1821BH025C100N	SCREW,CAP,HEXAGON H	2
6	PAFZZ	5310-00-550-1130	80205	MS35333-40	WASHER,LOCK UOC: [redacted]	2
7	PAFZZ	5999-01-463-1448	19200	12976747-4	STRIP,ELECTRICAL GR	1
8	PAFZZ	5305-00-071-2506	05047	AES01C250500AW9A91	SCREW,CAP,HEXAGON H UOC: [redacted]	25
9	PAFZZ	5340-00-579-9678	81343	AS21919WDG32	CLAMP,LOOP	3
10	PAFZZ	5305-00-984-6210	80205	MS35206-263	SCREW,MACHINE UOC: [redacted]	3
11	PAFZZ	5340-00-515-0595	81343	AS21919WDG36	CLAMP,LOOP	1
12	PAFZZ	5975-00-451-5001	81343	MS3367-3-9	STRAP,TIEDOWN,ELECT	1
13	PAFZZ	5306-00-226-4827	05047	AEB02C312A00AW9A81	BOLT,MACHINE	2
14	PAFZZ	5310-00-081-4219	96906	MS27183-12	WASHER,FLAT	2
15	PAFZZ	5305-00-988-1727	80205	MS35206-283	SCREW,MACHINE	5
16	PAFZZ	5310-00-823-8804	96906	MS27183-9	WASHER,FLAT	4
17	PAFZZ	5975-01-300-6501	19200	9380262	HANGER,CABLE	1
18	PAFFF	5895-01-157-3077	19207	12295082-3	INDICATOR CONTROL S	2
19	PAFZZ	5305-00-984-6216	96906	MS35206-269	SCREW,MACHINE	2
20	PAFZZ	5305-00-995-3441	80205	MS35207-269	SCREW,MACHINE	2
21	PAFZZ	5310-00-902-6676	80205	MS21083N3	NUT,SELF-LOCKING,HE	2
22	PAFZZ	5340-01-113-1527	19207	12297886	STRAP,RETAINING	1
23	PAFZZ	5310-00-014-5850	96906	MS27183-42	WASHER,FLAT UOC: [redacted]	8
24	PAFZZ	5305-01-299-9534	80205	MS35206-261	SCREW,MACHINE	5
25	PAFZZ	5305-00-984-7364	96906	MS35206-273	SCREW,MACHINE	6

(1) ITEM NO.	(2) SMR CODE	(3) NSN	(4) CAGEC	(5) PART NUMBER	(6) DESCRIPTION AND USABLE ON CODE (UOC)	(7) QTY
26	PAFZZ	5310-00-576-5752	80205	MS35333-39	WASHER,LOCK	6
27	PAFZZ	5930-01-456-0530	19200	12982416	SWITCH ASSEMBLY 2A23,2A24.....	2
					END OF FIGURE	

MAINTAINER

TURRET ELECTRICAL INSTL (HARNESS) (FTEA) - 12956543-2

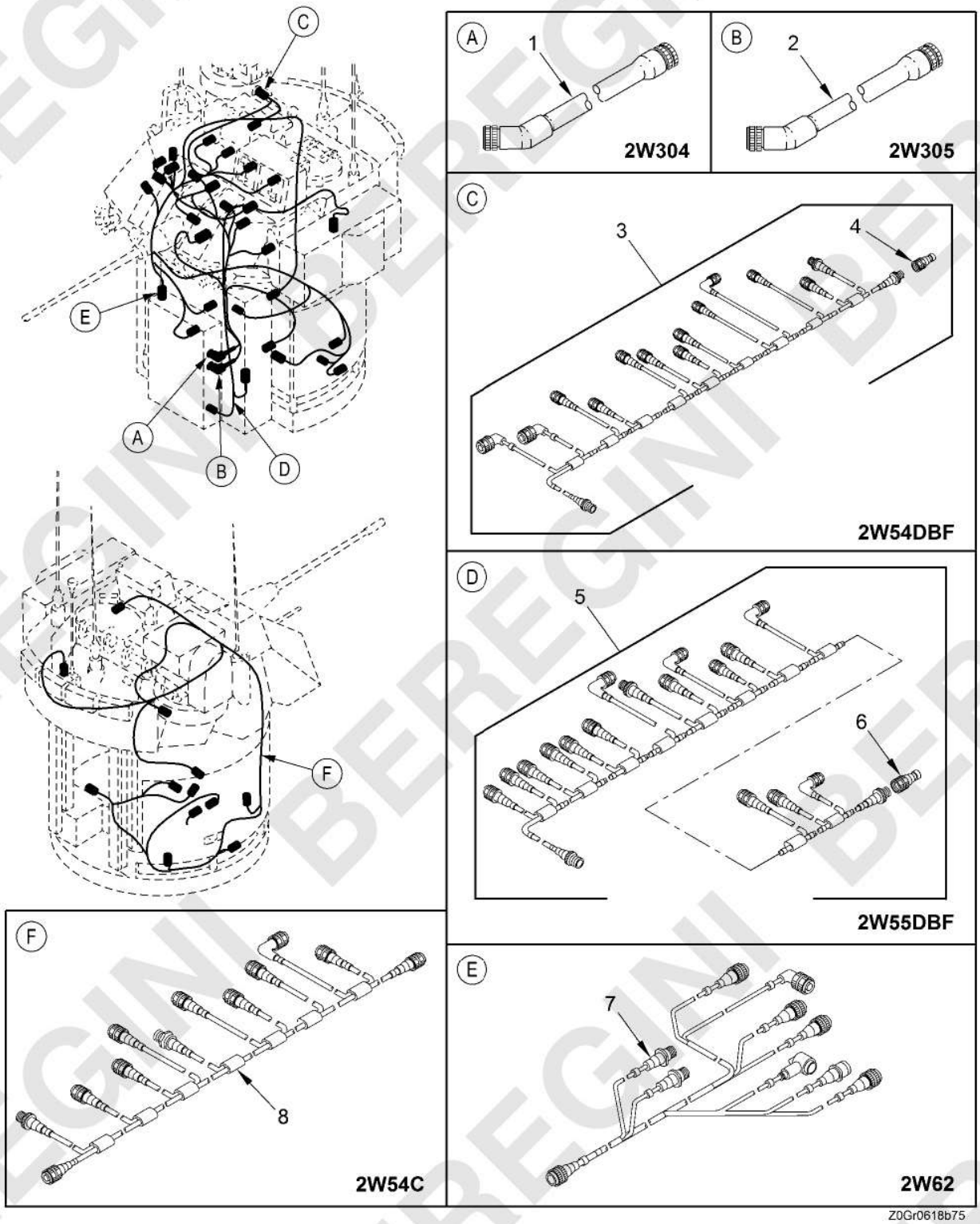

Figure 278. Turret Electrical Instl (Harness) (FTEA) - 12956543-2
(Sheet 1 of 8)

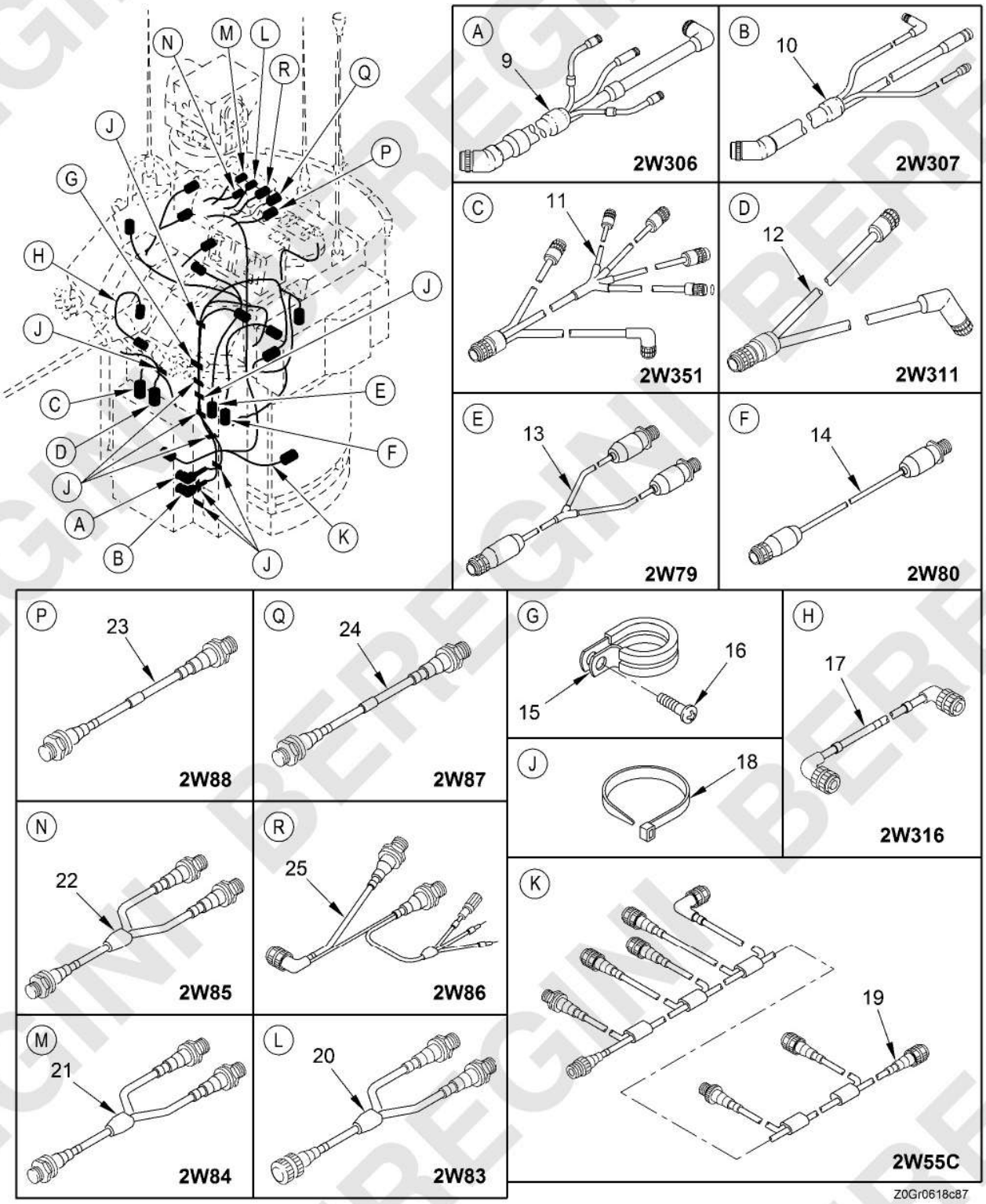

Figure 278. Turret Electrical Instl (Harness) (FTEA) - 12956543-2
(Sheet 2 of 8)

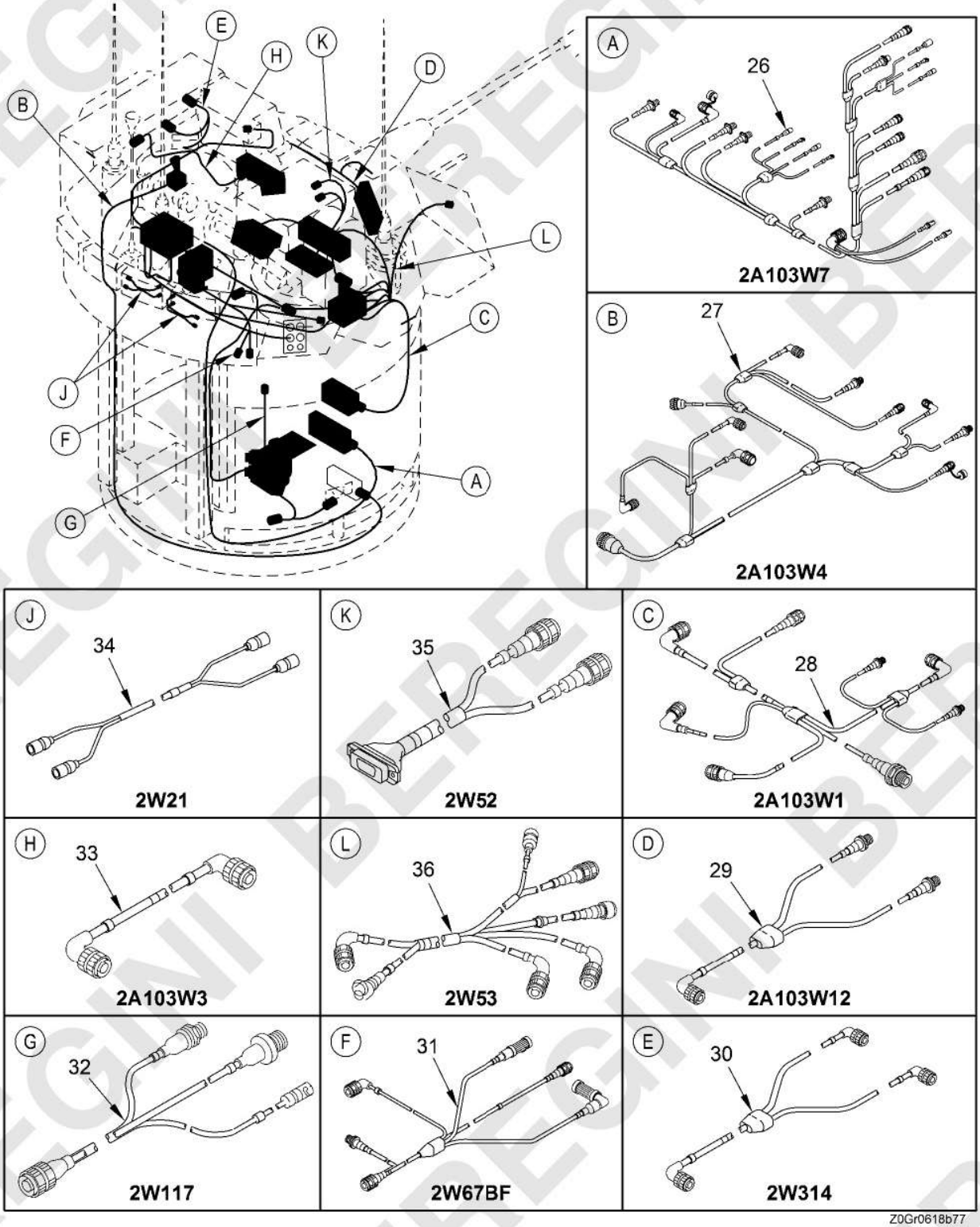

Figure 278. Turret Electrical Instl (Harness) (FTEA) - 12956543-2
(Sheet 3 of 8)

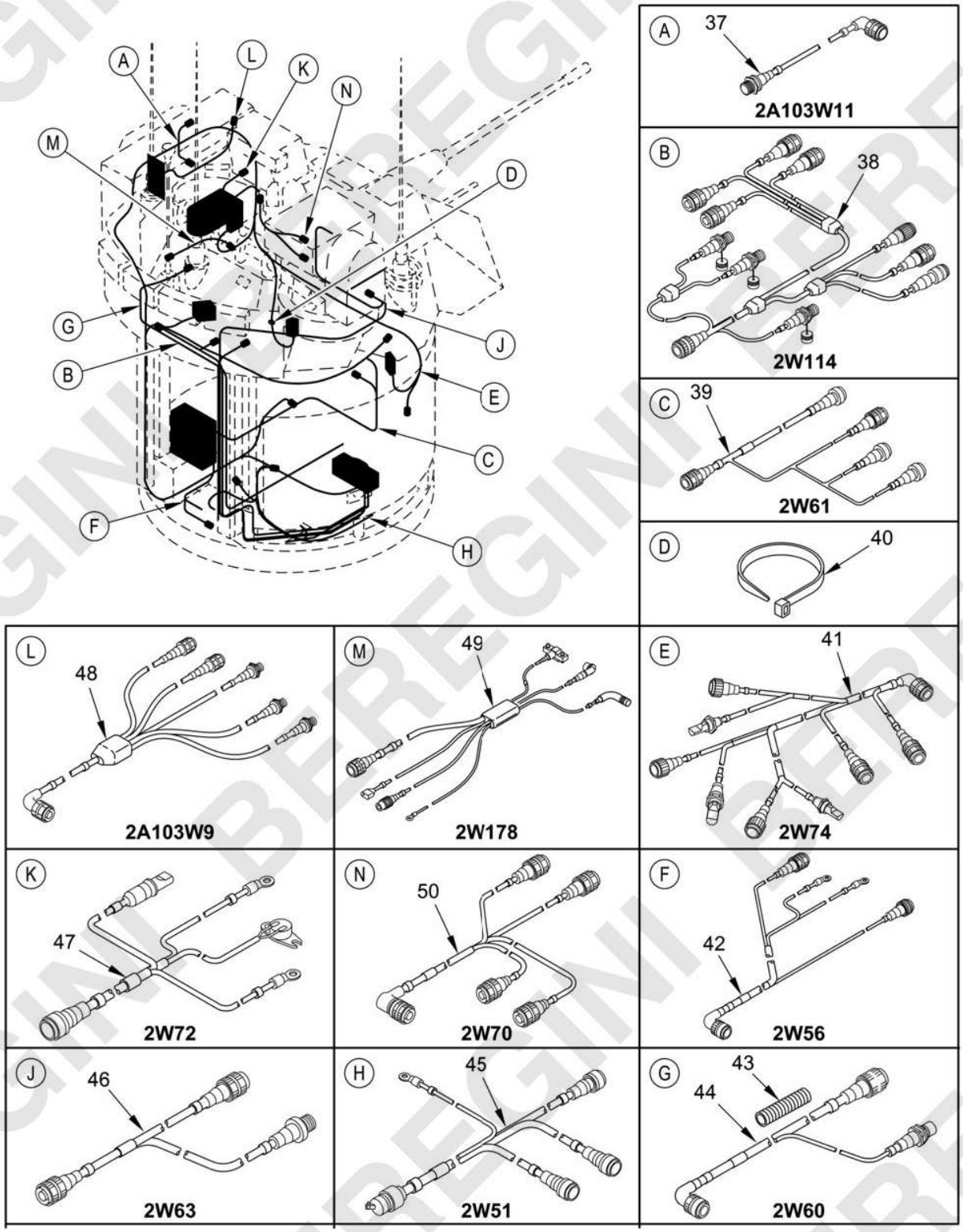

Figure 278. Turret Electrical Instl (Harness) (FTEA) - 12956543-2
(Sheet 4 of 8)

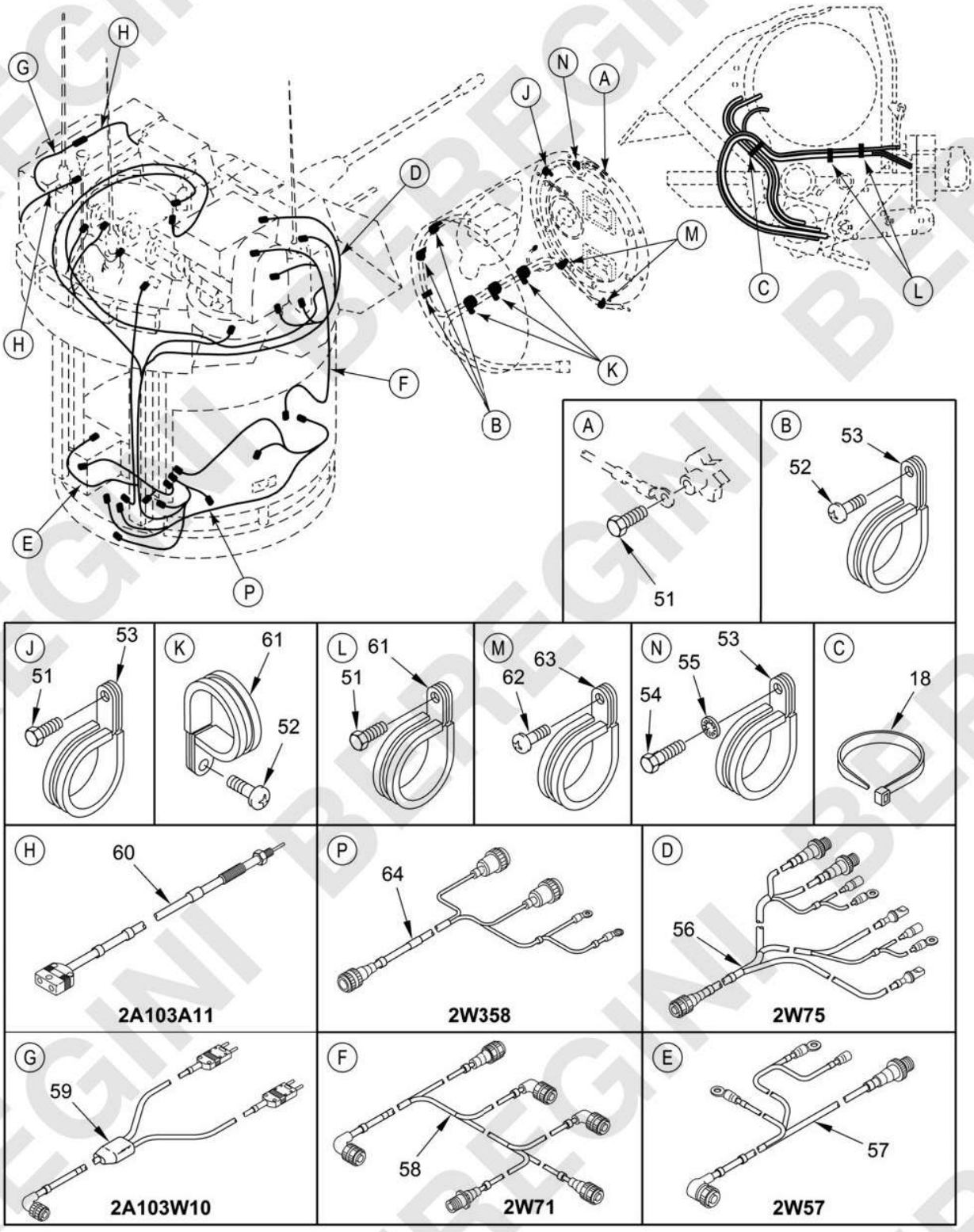

Figure 278. Turret Electrical Instl (Harness) (FTEA) - 12956543-2
(Sheet 5 of 8)

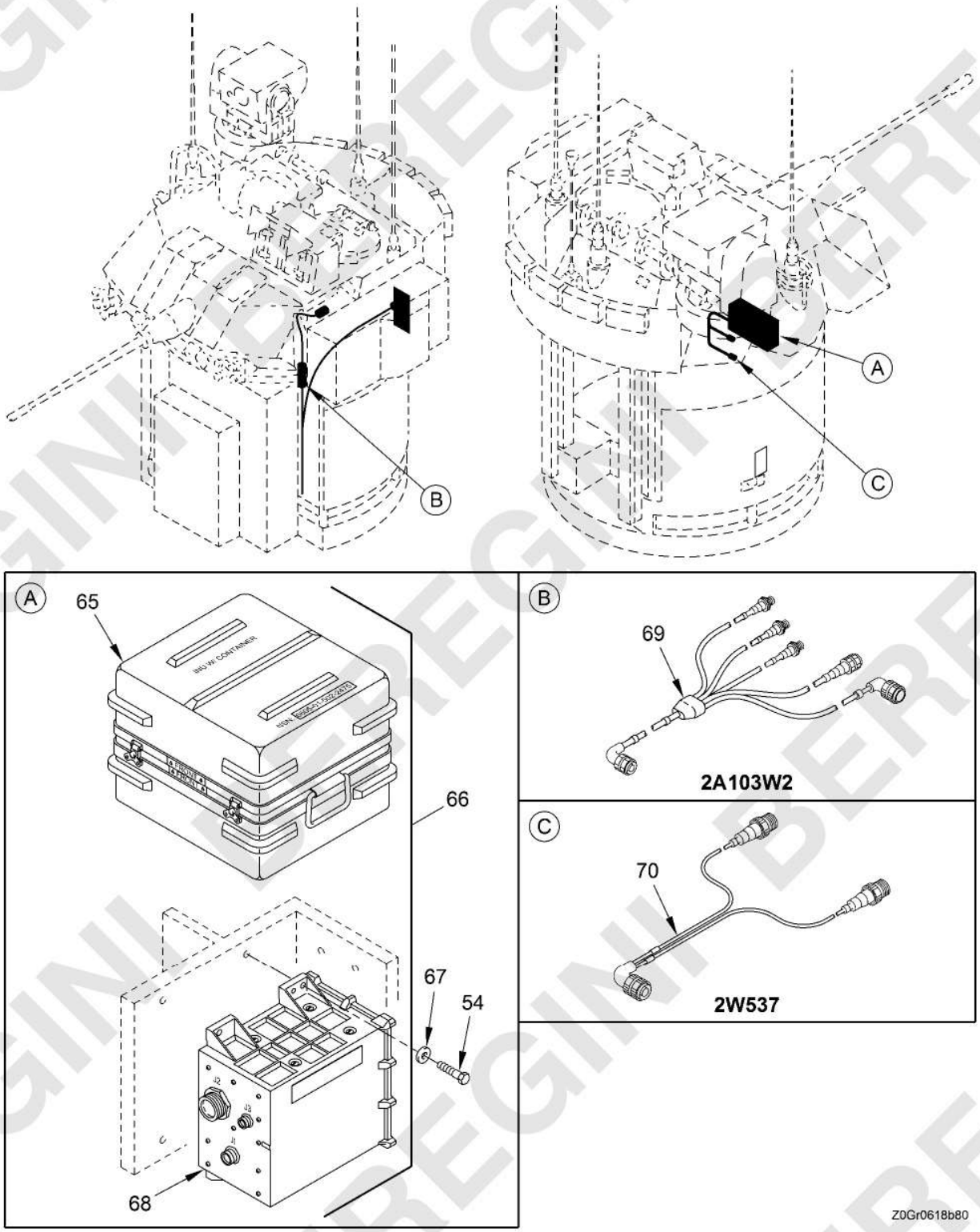

Figure 278. Turret Electrical Instl (Harness) (FTEA) - 12956543-2
(Sheet 6 of 8)

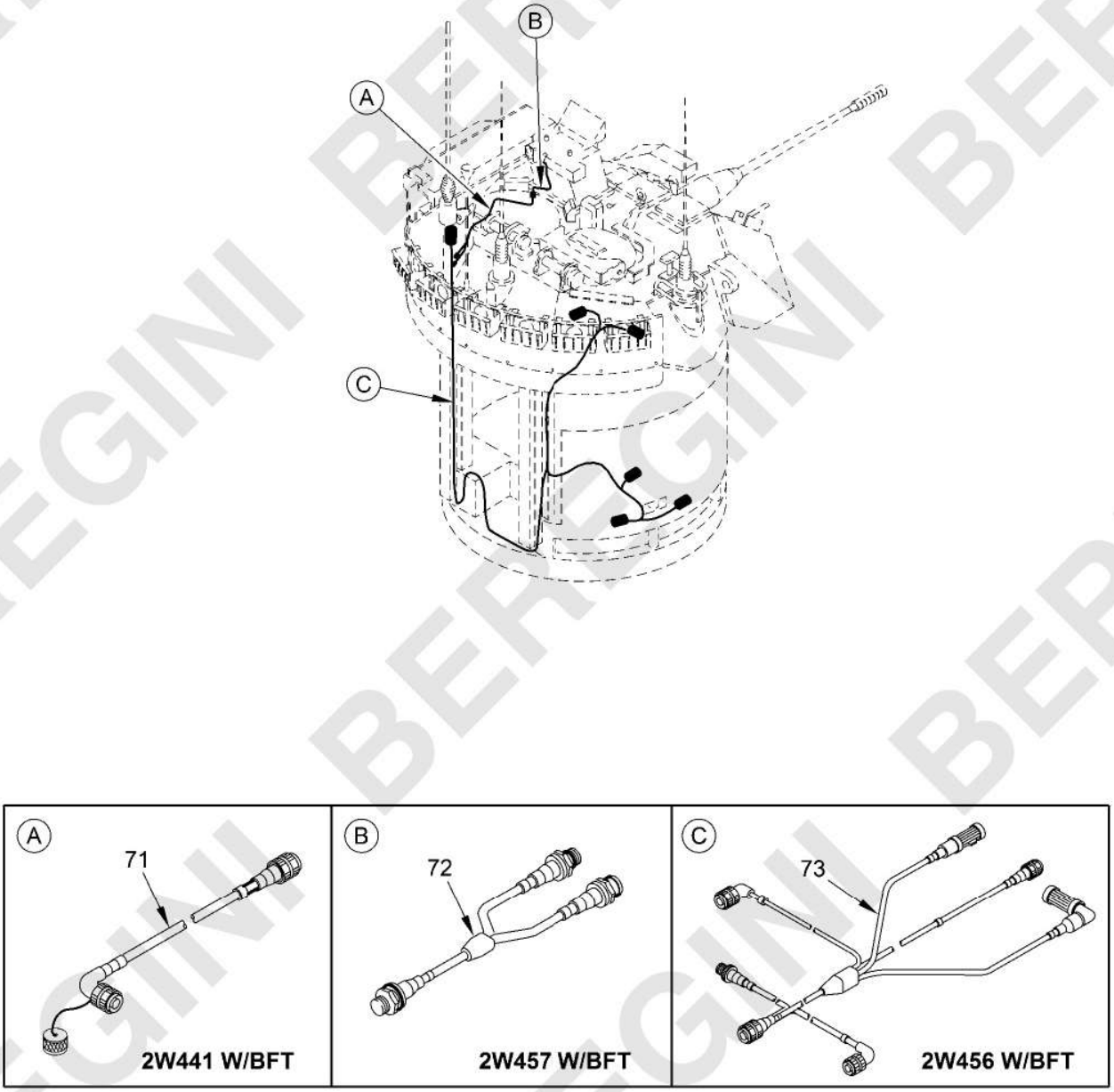

Figure 278. Turret Electrical Instl (Harness) (FTEA) - 12956543-2
(Sheet 7 of 8)

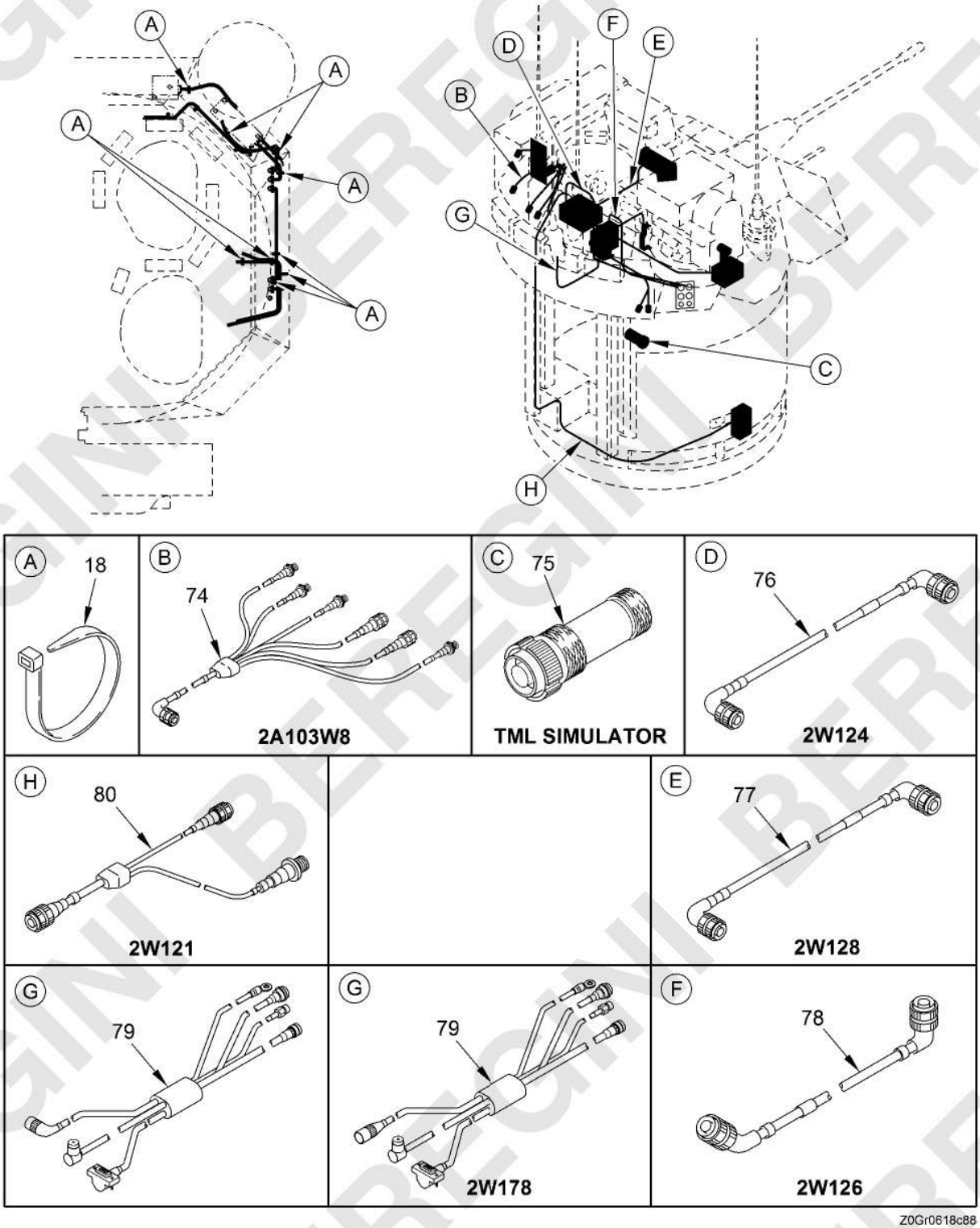

Figure 278. Turret Electrical Instl (Harness) (FTEA) - 12956543-2
(Sheet 8 of 8)

(1) ITEM NO.	(2) SMR CODE	(3) NSN	(4) CAGEC	(5) PART NUMBER	(6) DESCRIPTION AND USABLE ON CODE (UOC)	(7) QTY
					GROUP FTEA TURRET ELECTRICAL INSTL	
					FIGURE 278 Turret Electrical Instl (Harness) (FTEA) - 12956543-2	
1	PAFZZ	5995-01-113-3778	19207	12292803-4	CABLE ASSEMBLY,SPEC 2W304	1
2	PAFZZ	5995-01-114-0117	19207	12292803-5	CABLE ASSEMBLY,SPEC 2W305	1
3	PAFZZ	5995-01-668-9394	19200	13020316-1	WIRING HARNESS,BRAN 2W54DBF	1
4	PAFZZ	5935-01-481-5247	06090	D-600-0174	.DUMMY CONNECTOR,PLU	1
5	PAFZZ	5995-01-668-5353	19200	13020317-1	WIRING HARNESS,BRAN 2W55DBF	1
6	PAFZZ	5935-01-494-8038	06090	D-600-0175	.DUMMY CONNECTOR,PLU	1
7	PAFZZ	5995-01-463-4254	19200	12956574	WIRING HARNESS,BRAN 2W62	1
8	PAFZZ	5995-01-463-2113	076M6	12956591	WIRING HARNESS,BRAN 2W54C	1
9	PAFZZ	5995-01-592-4174	19200	13024914	CABLE ASSEMBLY,SPEC 2W306	1
10	PAFZZ	5995-01-462-9063	19200	12900604-1	CABLE ASSEMBLY,SPEC 2W307	1
11	PAFZZ	5995-01-463-3134	19207	12292803-13	CABLE ASSEMBLY,SPEC 2W351	1
12	PAFZZ	5995-01-195-0153	19207	12292803-11	CABLE ASSEMBLY,SPEC 2W311	1
13	PAFZZ	5995-01-463-1482	076M6	12976491	WIRING HARNESS,BRAN 2W79	1
14	PAFZZ	5995-01-463-1517	19200	12976492	WIRING HARNESS 2W80	1
15	PAFZZ	5340-00-515-0595	81343	AS21919WDG36	CLAMP,LOOP	1
16	PAFZZ	5305-00-984-6210	80205	MS35206-263	SCREW,MACHINE UOC: [redacted]	1
17	PAFZZ	5995-01-631-8063	19207	13038610	WIRING HARNESS UOC: [redacted]	1
18	PAFZZ	5975-00-451-5001	81343	MS3367-3-9	STRAP,TIEDOWN,ELECT	3
19	PAHZZ	5995-01-463-2022	19200	12956593	WIRING HARNESS,HARN 2W55C	1
20	PAFZZ	6150-01-473-1579	19200	12986264	CABLE ASSEMBLY,POWE 2W83	1
21	PAFZZ	5995-01-472-9271	19200	12956599	CABLE ASSEMBLY,POWE 2W84	1
22	PAFZZ	5995-01-472-9286	19200	12956600	CABLE ASSEMBLY,POWE 2W85	1
23	PAFZZ	5995-01-472-9762	19200	12956603	CABLE ASSEMBLY,SPEC 2W88	1
24	PAFZZ	5995-01-472-9746	19200	12956602	CABLE ASSEMBLY,SPEC 2W87	1
25	PAFZZ	5995-01-472-9616	19200	12956601	CABLE ASSEMBLY,POWE 2W86	1
26	PAFZZ	5995-01-593-2997	19200	13020312	WIRING HARNESS,BRAN 2A103W7	1
27	PAFZZ	5995-01-593-6030	19200	13020308	WIRING HARNESS,BRAN 2A103W4	1
28	PAFZZ	5995 01-593-5830	19200	13020315-1	WIRING HARNESS,BRAN 2A103W1	1

(1) ITEM NO.	(2) SMR CODE	(3) NSN	(4) CAGEC	(5) PART NUMBER	(6) DESCRIPTION AND USABLE ON CODE (UOC)	(7) QTY
28	PAFZZ	5995-01-593-5830	19200	13020315	WIRING HARNESS,BRAN 2A103W1 UOC: [redacted]	1
29	PAFZZ	5995-01-593-5500	19200	13020493	WIRING HARNESS,BRAN 2A103W12	1
30	PAFZZ	5995-01-622-5096	19200	13035116	WIRING HARNESS,BRAN 2W314	1
31	PAFZZ	5995-01-513-3333	19200	12986675	CABLE ASSEMBLY,RADI 2W67BF W/O BLUE FORCE TRACKING	1
32	PAFZZ	6150-01-492-1843	19200	12991955	CABLE ASSEMBLY,SPEC 2W117	1
33	PAFZZ	5995-01-593-5459	19200	13020307	WIRING HARNESS,BRAN 2A103W3	1
34	PAFZZ	6150-01-463-4328	19207	12465367-2	CABLE ASSEMBLY,SPEC 2W21	2
35	PAFZZ	5995-01-463-3191	19200	12956564	WIRING HARNESS,BRAN 2W52 UOC: [redacted]	1
36	PAFZZ	5995-01-463-3510	19200	12956565	WIRING HARNESS,BRAN 2W53	1
37	PAFZZ	5995-01-593-5479	19200	13020323	WIRING HARNESS 2A103W11	1
38	PAFZZ	6150-01-492-4611	19200	12991948	WIRING HARNESS,BRAN 2W114	1
39	PAFZZ	5995-01-463-4154	19200	12956573	WIRING HARNESS,BRAN 2W61	1
40	PAFZZ	5975-00-156-3253	81343	MS3367-2-9	STRAP,TIEDOWN,ELECT	1
41	PAFZZ	5995-01-463-1455	19200	12956609	WIRING HARNESS,BRAN 2W61	1
42	PAFZZ	5995-01-463-3806	19200	12956568	WIRING HARNESS,BRAN 2W56	1
43	MFFZZ		81349	M81914/4-1110	TUBING,NONMETALLIC MAKE FROM TUBING P/N M81914/4-1110 (81349)	1
44	PAFZZ	5995-01-463-4125	19200	12956572	WIRING HARNESS,BRAN 2W60	1
45	PAFZZ	5995-01-463-1556	19200	12956544	WIRING HARNESS,BRAN 2W51	1
46	PAFZZ	5995-01-463-5352	19200	12956575	WIRING HARNESS,BRAN 2W63 USED W/ TPU II	1
47	PAFZZ	6150-01-486-6716	19200	12991927	CABLE ASSEMBLY,SPEC 2W72	1
48	PAFZZ	5995-01-593-5522	19200	13020314	WIRING HARNESS,BRAN 2A103W9	1
49	PAFZZ	5995-01-592-8450	19200	13020436	WIRING HARNESS,BRAN 2W178	1
50	PAFZZ	5995-01-462-6430	19200	12956611-2	WIRING HARNESS,BRAN 2W70	1
51	PAFZZ	5305-00-071-2506	05047	AES01C250500AW9A91	SCREW,CAP,HEXAGON H UOC: [redacted]	3
52	PAFZZ	5305-00-988-1722	96906	MS35206-278	SCREW,MACHINE	6
53	PAFZZ	5305-00-543-2419	05047	AES01C375A12AW9A91	SCREW,CAP,HEXAGON H	4
53	PAFZZ	5340-00-088-1254	80205	MS21333-104	CLAMP,LOOP	5
54	PAFZZ	5305-00-225-3842	05047	AES01C250A12AW9A91	SCREW,CAP,HEXAGON H	4
55	PAFZZ	5310-00-550-1130	80205	MS35333-40	WASHER,LOCK UOC: [redacted]	17
56	PAFZZ	5995-01-463-2034	19200	12956610	WIRING HARNESS,BRAN 2W75	1

(1) ITEM NO.	(2) SMR CODE	(3) NSN	(4) CAGEC	(5) PART NUMBER	(6) DESCRIPTION AND USABLE ON CODE (UOC)	(7) QTY
57	PAFZZ	5995-01-463-3971	19200	12956569	WIRING HARNESS,BRAN 2W57	1
58	PAFZZ	5995-01-463-2396	19200	12956608	WIRING HARNESS,BRAN 2W71	1
59	PAFZZ	5995-01-593-3024	19200	13020454	WIRING HARNESS,BRAN 2A103W10	1
60	PAFZZ	6150-01-612-7847	19200	13020455	CABLE ASSEMBLY,SPEC 2A103A11	2
61	PAFZZ	5340-00-809-1500	80205	MS21333-107	CLAMP,LOOP UOC: [redacted]	5
62	PAFZZ	5305-00-988-1723	80205	MS35206-279	SCREW,MACHINE	4
63	PAFZZ	5340-00-177-3735	80205	NAS1715D20NH	CLAMP,LOOP	2
64	PAFZZ	5995-01-463-2403	19200	12956606	WIRING HARNESS,BRAN 2W358	1
65	PAFKK	8145-01-502-2474	60415	8327	.SHIPPING AND STORAG	1
66	PAFKK	6605-01-563-6713	19200	13015247	INERTIAL NAVIGATION 2A407 UOC: [redacted]	1
66	PAFKK	6605-01-502-2475	19200	12994838	INU AND CONTAINER 2A407	1
67	PAFZZ	5310-00-149-9146	96906	MS20002C6	WASHER,RECESSED UOC: [redacted]	4
68	XAFKK		19200	13060512	.INERTIAL NAVIGATION SEE TM 9-2350-406-23&P	1
69	PAFZZ	5995-01-593-2915	19200	13020311	WIRING HARNESS,BRAN 2A103W2	1
70	PAFZZ	6150-01-501-3151	19200	12986678	CABLE ASSEMBLY,SPEC 2W537, USED ON TURRET INSTALLED INU	1
71	PAFZZ	6020-01-579-4424	19200	13015066	WIRING HARNESS 2W457 W/ BLUE FORCE TRACKING UOC: [redacted]	1
72	PAFZZ	5995-01-578-4854	19200	12994825-1	CABLE ASSEMBLY SPEC 2W441 W/ BLUE FORCE TRACKING UOC: [redacted]	1
73	PAFZZ	5995-01-627-2435	19200	13015067-2	WIRING HARNESS,BRAN 2W456 W/ BLUE FORCE TRACKING UOC: [redacted]	1
74	PAFZZ	5995-01-593-3073	19200	13020313	WIRING HARNESS,BRAN 2A103W8	1
75	PAFZZ	5935-01-616-2726	06324	733-002	DUMMY CONNECTOR,PLU	1
76	PAFZZ	5995-01-542-5211	19200	13007284	WIRING HARNESS 2W124 UOC: [redacted]	1
77	PAFZZ	5995-01-542-5214	19200	13007307	WIRING HARNESS 2W128	1
78	PAFZZ	5995-01-542-5212	19200	13007286	WIRING HARNESS 2W126 UOC: [redacted]	1
79	PAFZZ	6150-01-546-4508	19200	12992149	WIRING HARNESS,DAGR 2W178 UOC: [redacted]	1
80	PAFZZ	5995-01-543-0992	19200	13007281	WIRING HARNESS 2W121	1
					END OF FIGURE	

MAINTAINER

DOMELIGHT (FTEAB) - MS51073-1

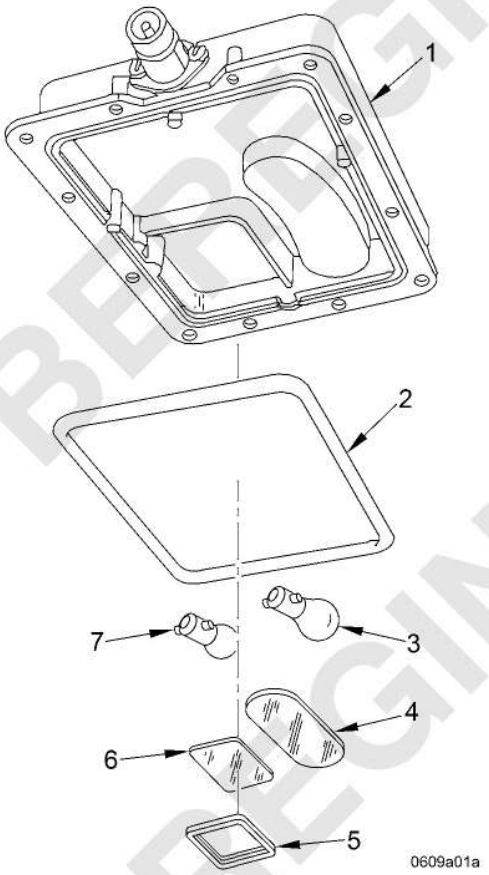

Figure 280. Domelight (FTEAB) - MS51073-1

(1) ITEM NO.	(2) SMR CODE	(3) NSN	(4) CAGEC	(5) PART NUMBER	(6) DESCRIPTION AND USABLE ON CODE (UOC)	(7) QTY
					GROUP FTEAB DOMELIGHT	
					FIGURE 280 Domelight (FTEAB) - MS51073-1	
1	XAFZZ		19207	8744898	COVER,ACCESS	1
2	PAFZZ	5330-00-796-2254	19207	7962254	SEAL,NONMETALLIC RO	1
3	PAFZZ	6240-00-295-2668	58536	AA52463-B11	LAMP,INCANDESCENT	1
4	PAFZZ	6220-00-796-2244	19207	7962244	LENS,LIGHT	1
5	PAFZZ	5330-01-186-5856	19207	12343072	GASKET	1
6	PAFZZ	6220-01-123-1353	19207	12314082	LENS,LIGHT	1
7	PAFZZ	6240-00-019-3093	58536	AA52463-A09	LAMP,INCANDESCENT	1
					END OF FIGURE	

BEREGINI BEREGINI BEREGINI

MAINTAINER

VANAXIAL, 2A10 (FTEAI) - 12308376

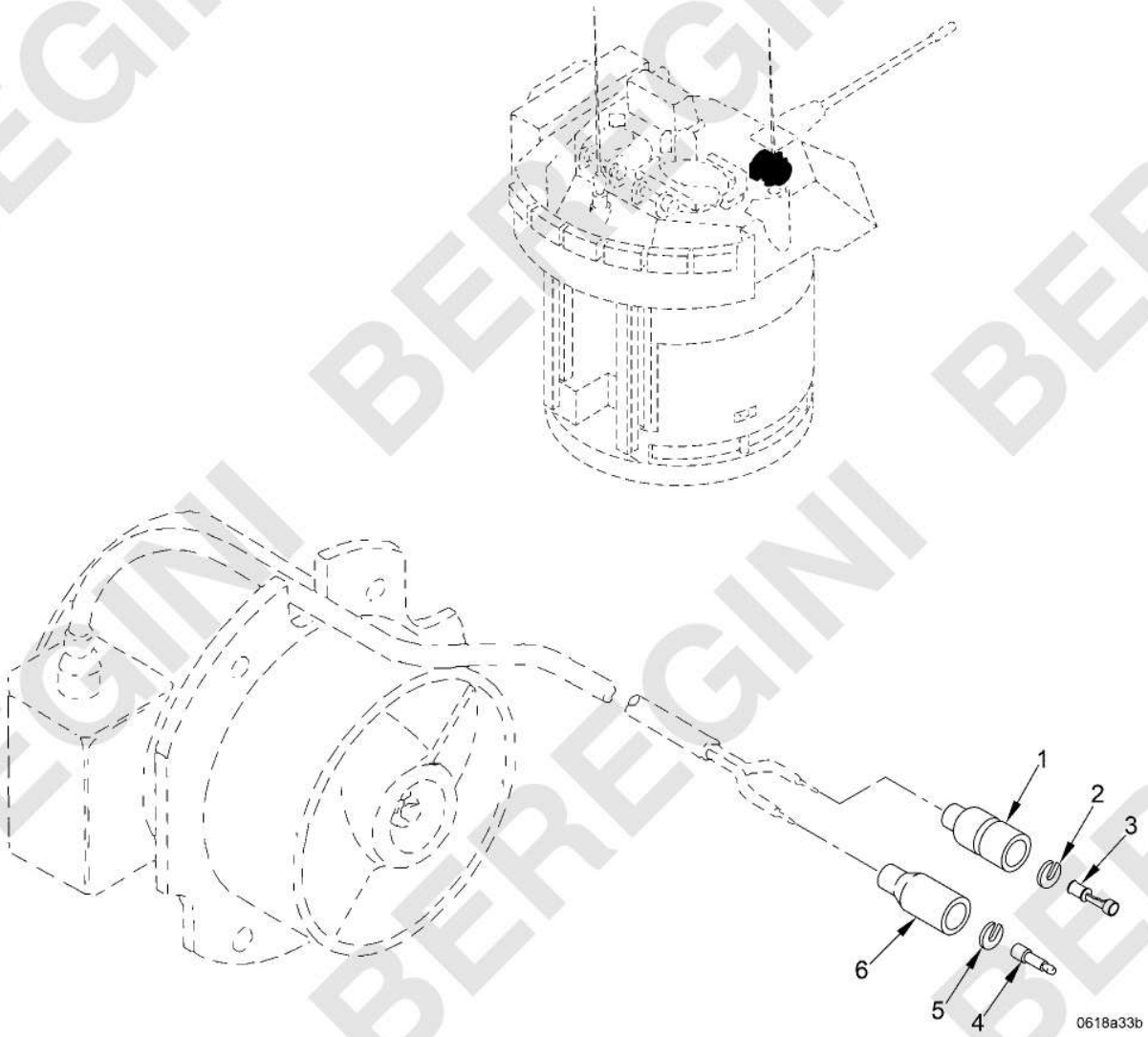

Figure 281. Vanaxial, 2A10 (FTEAI) - 12308376

(1) ITEM NO.	(2) SMR CODE	(3) NSN	(4) CAGEC	(5) PART NUMBER	(6) DESCRIPTION AND USABLE ON CODE (UOC)	(7) QTY
					GROUP FTEAI VANEAXIAL FAN, 2A10	
					FIGURE 281 Vanaxial, 2A10 (FTEAI) - 12308376	
1	PAFZZ	2590-00-695-9076	77060	5297084	SHELL,HEAD LIGHT CI	1
2	PAFZZ	5310-00-298-8903	19207	8338570	WASHER,FLAT	1
3	PAFZZ	5940-00-399-6676	19207	8338564	TERMINAL SET,QUICK	1
4	PAFZA	5999-00-925-6495	58536	AA52536-1	CONTACT,ELECTRICAL	1
5	PAFZZ	5310-00-595-7044	19207	8338573	WASHER,SLOTTED	1
6	PAFZZ	5935-00-695-9077	19207	8338572	SHELL,ELECTRICAL CO	1
					END OF FIGURE	

BEREGINI BEREGINI BEREGINI

MAINTAINER

COMMANDERS DISPLAY INSTL (FTEAJ) - 12976782, 13024677

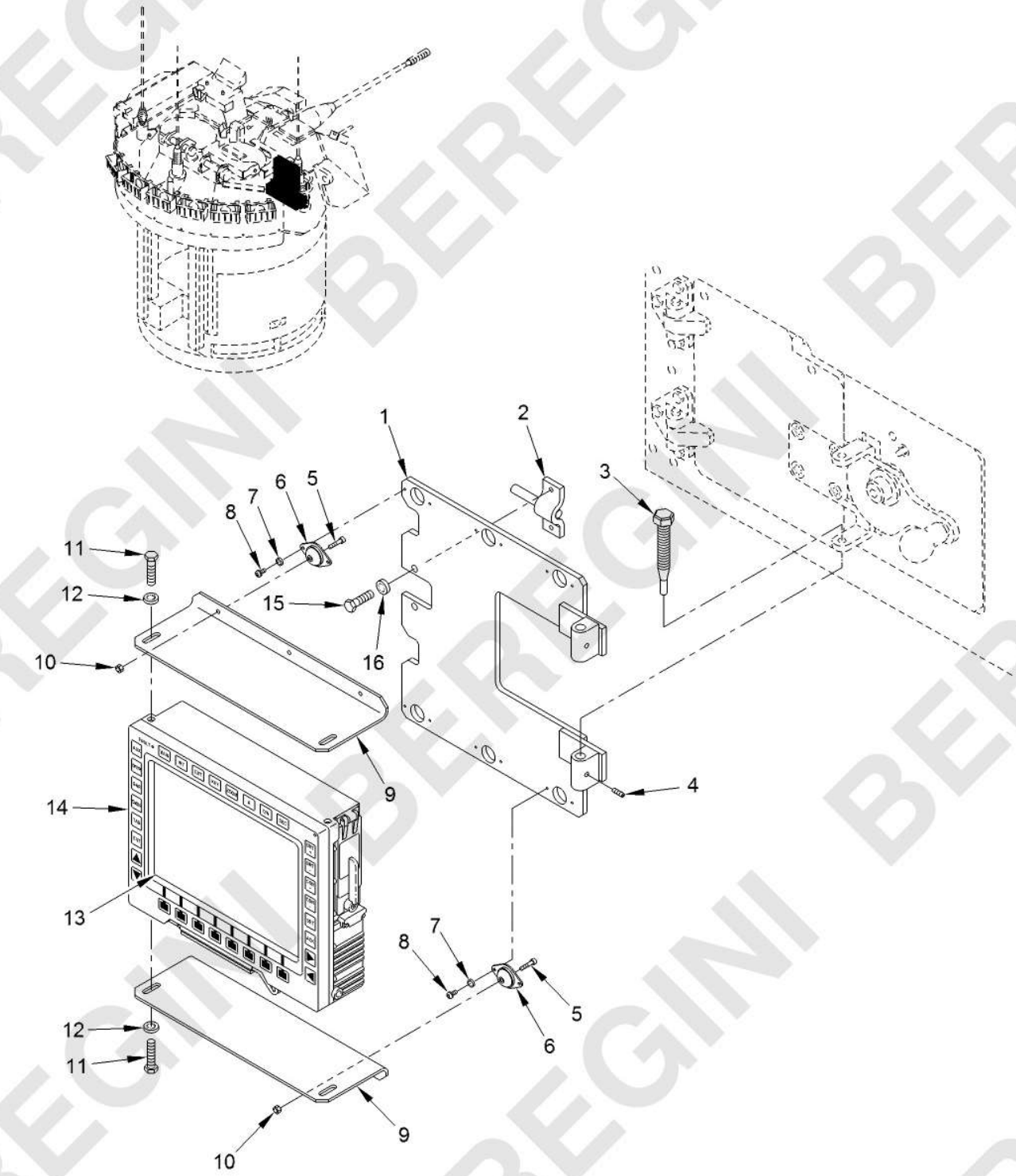

Figure 282. Commanders Display Instl (FTEAJ) - 12976782, 13024677

(1) ITEM NO.	(2) SMR CODE	(3) NSN	(4) CAGEC	(5) PART NUMBER	(6) DESCRIPTION AND USABLE ON CODE (UOC)	(7) QTY
					GROUP FTEAJ COMMANDERS DISPLAY INSTL	
					FIGURE 282 Commanders Display Instl (FTEAJ) - 12976782, 13024677	
1	PAFZZ	5340-01-586-5544	19200	13020293	BRACKET,MOUNTING	1
2	PAFZZ	5315-01-586-5537	19200	13024504	PIN,TAPERED,THREADE	1
3	PAFZZ	5315-01-586-5526	19200	13020294	PIN,STRAIGHT,HEADLE	2
4	PAFZZ	5305-01-097-7899	80205	MS51031-112	SETSCREW	2
5	PAFZZ	5305-00-988-7605	80205	MS16995-29	SCREW,MACHINE	6
6	PAFZZ	5340-01-487-1145	0LRN7	LP02-EPDM01	MOUNT,RESILIENT,GEN	6
7	PAFZZ	5310-00-579-0079	80205	MS35333-37	WASHER,LOCK	12
8	PAFZZ	5305-00-984-4988	80205	MS35206-228	SCREW,MACHINE	12
9	PAFZZ	5340-01-487-8198	19207	12471304	BRACKET,ANGLE	2
9	PAFZZ	5340-01-586-5520	19200	13024503	BRACKET,ANGLE USE ON 13024677 UOC: BSA	2
10	PAFZZ	5310-00-941-6019	80205	MS21083N08	NUT,SELF-LOCKING,HE	6
11	PAFZZ	5305-00-071-2506	05047	AES01C250500AW9A91	SCREW,CAP,HEXAGON H UOC: BSA	4
12	PAFZZ	5310-00-543-5933	80205	MS35333-73	WASHER,LOCK	4
12	PAFZZ	5310-00-543-2740	80205	MS35333-74	WASHER,LOCK UOC: BSA	4
13	PAFZZ		09581	98-0440-4268-1	FILM OPTIONAL USE ON 12517542 UOC: BSA	1
14	PAFFD	5999-01-568-6545	19207	12466033-4	TACTICAL DISPLAY SEE TM 9-2350-406-23&P UOC: [redacted]	1
14	PAFFD	5999-01-541-1770	19207	12466033-3	TACTICAL DISPLAY SEE TM 9-2350-406-23&P UOC: [redacted]	1
14	PAFKK	5999-01-609-7161	19207	12540726	COM INTEL DISPLAY 2A803 UOC: BSA	1
14	PAFKK	5999-01-579-4194	19207	12517542	SMART DISPLAY UNIT 2A801 UOC: BSA	1
14	PAFFD	5999-01-499-5490	19207	12466033-2	TACTICAL DISPLAY SEE TM 9-2350-406-23&P UOC: [redacted]	1
14	PAFFD	5999-01-490-9701	19207	12466033-1	TACTICAL DISPLAY SEE TM 9-2350-406-23&P UOC: [redacted]	1
15	PAFZZ	5305-00-225-3844	05047	AES01C250562AW9A91	SCREW,CAP,HEXAGON H	2

(1) ITEM NO.	(2) SMR CODE	(3) NSN	(4) CAGEC	(5) PART NUMBER	(6) DESCRIPTION AND USABLE ON CODE (UOC)	(7) QTY
16	PAFZZ	5310-01-622-5292	05047	W211NAC0025NN155NNNF1	WASHER,LOCK	2
					END OF FIGURE	

MAINTAINER

TURRET/CHASSIS ELECTRICAL INSTL (FTEB) - 1302CHAS-ELEC

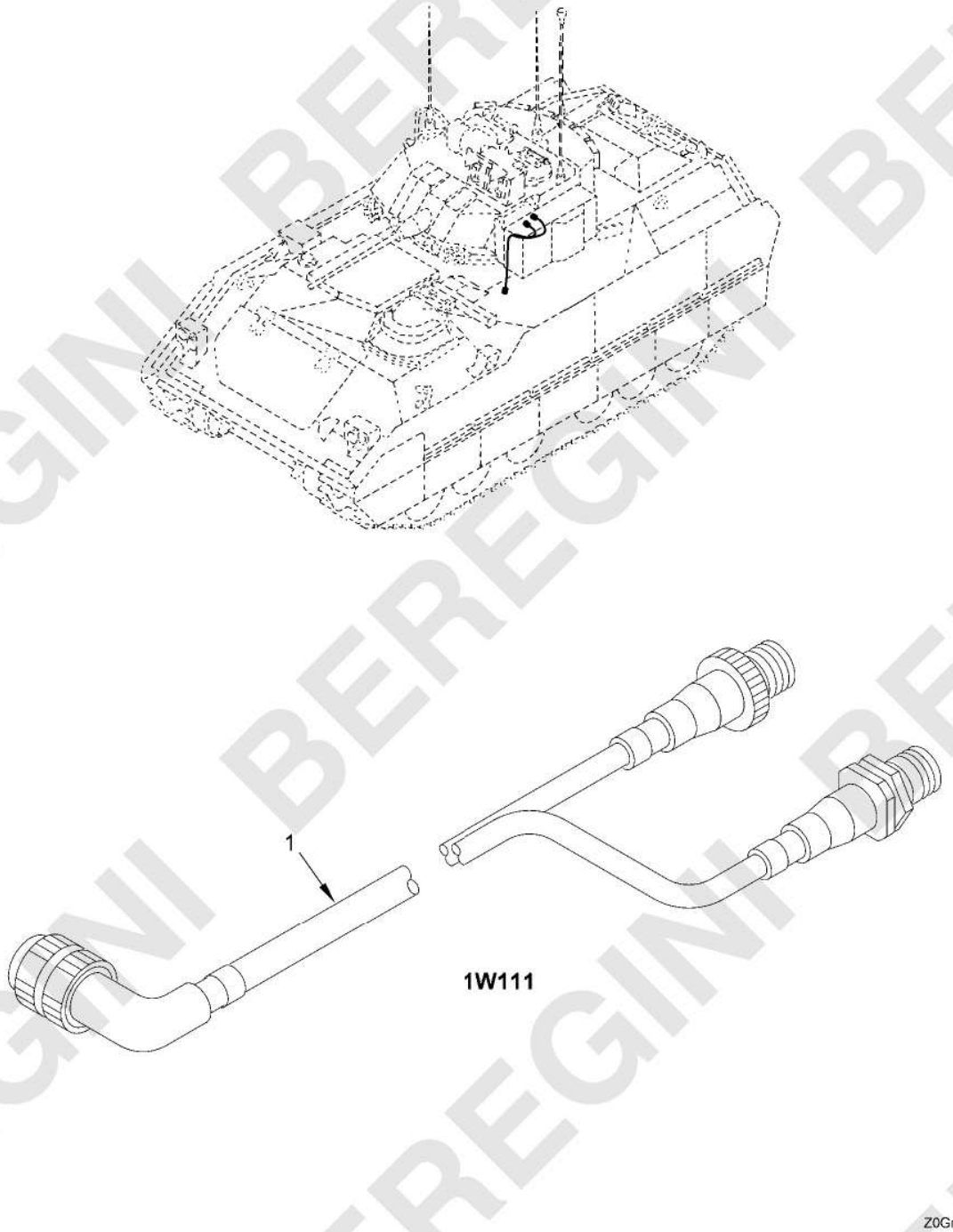

Figure 284. Turret/Chassis Electrical Instl (FTEB) - 1302CHAS-ELEC

(1) ITEM NO.	(2) SMR CODE	(3) NSN	(4) CAGEC	(5) PART NUMBER	(6) DESCRIPTION AND USABLE ON CODE (UOC)	(7) QTY
					GROUP FTEB TURRET/CHASSIS ELECTRICAL INSTL	
					FIGURE 284 Turret/Chassis Electrical Instl (FTEB) - 1302CHAS-ELEC	
1	PAFZZ	5995-01-479-1022	19207	12478554	WIRING HARNESS,BRAN 1W111.....	1
					END OF FIGURE	

BEREGINI BEREGINI BEREGINI

MAINTAINER

MRE HEATER, ACCESSORY KIT (M7 BFIST SA [redacted]) (VO) - 57K6767

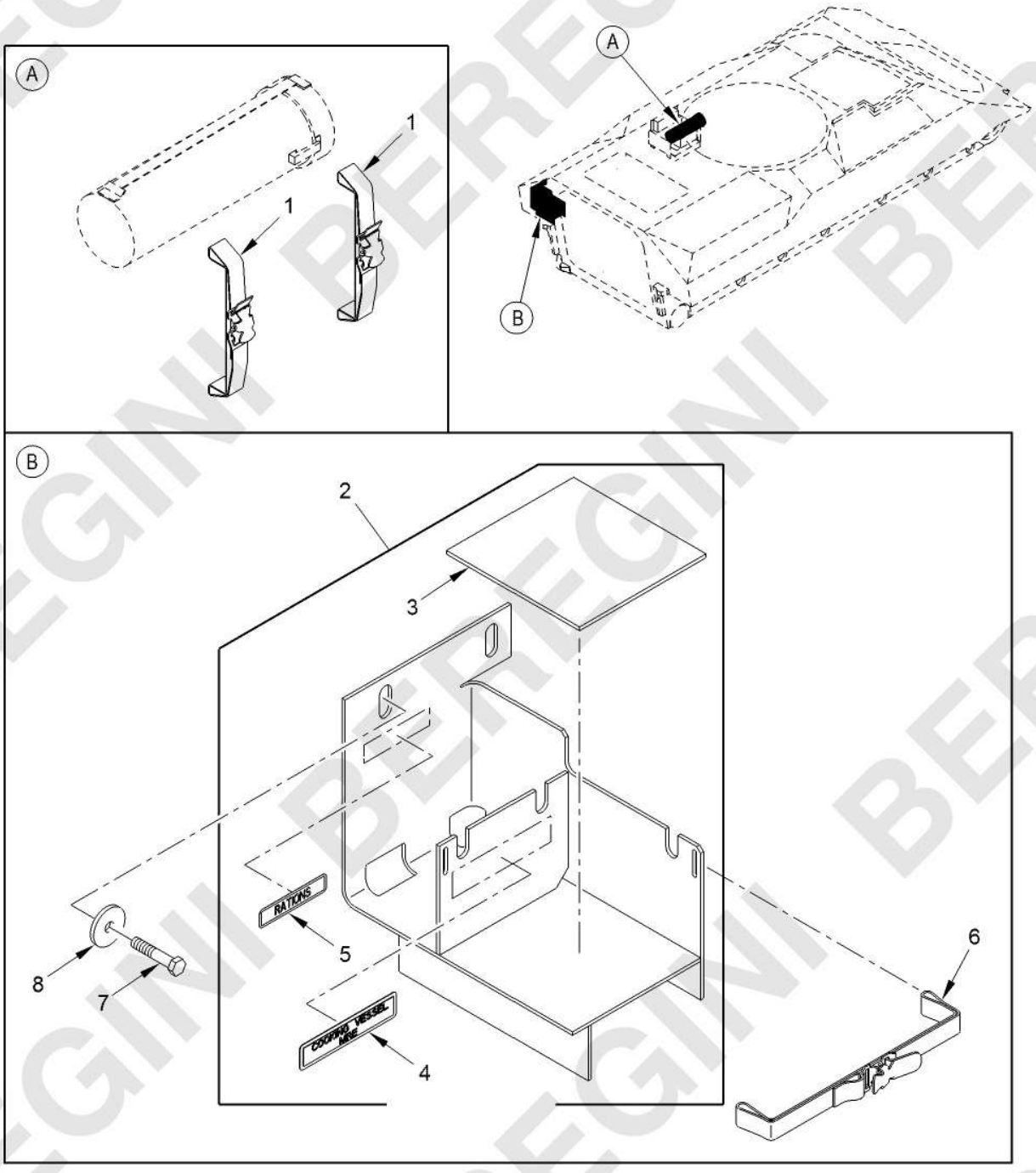

Figure 290. MRE Heater Accessory Kit (M7 BFIST SA [redacted] (VO) - 57K6767

(1) ITEM NO.	(2) SMR CODE	(3) NSN	(4) CAGEC	(5) PART NUMBER	(6) DESCRIPTION AND USABLE ON CODE (UOC)	(7) QTY
					GROUP VO MRE HEATER INSTL	
					FIGURE 290 MRE Heater Accessory Kit (M7 BFIST SA [redacted]) (VO) - 57K6767	
1	PAFZZ	5340-00-339-3768	19207	8690475	STRAP,WEBBING ..... UOC: BSA	2
2	PAFZZ	5340-01-417-8537	19207	12386323	BRACKET,MOUNTING ..... UOC: BSA	1
3	MFFZZ		19207	12386323-4	.CUSHION MAKE FROM RUBBER SHEET P/N 12328593-3 (19207)..... UOC: BSA	1
4	PCFZZ	7690-01-407-8245	19207	12385303	.MARKER,IDENTIFICATI ..... UOC: BSA	1
5	PCFZZ	7690-01-106-8106	19207	12294330-2	.MARKER,IDENTIFICATI ..... UOC: BSA	1
6	PAFZZ	5340-00-894-9545	19207	8690482	STRAP,WEBBING ..... UOC: BSA	2
7	PAFZZ	5305-00-071-2073	05047	AES01C500B50AW9A91	SCREW,CAP,HEXAGON H ..... UOC: BSA	2
8	PAFZZ	5310-01-566-9850	19207	12387327-28	WASHER,FLAT ..... UOC: BSA	2
					END OF FIGURE	

BEREGINI BEREGINI BEREGINI

MAINTAINER

BC SPOTLIGHT/INFRARED KIT (VTHA/VTHB) - 13015188, 13015190

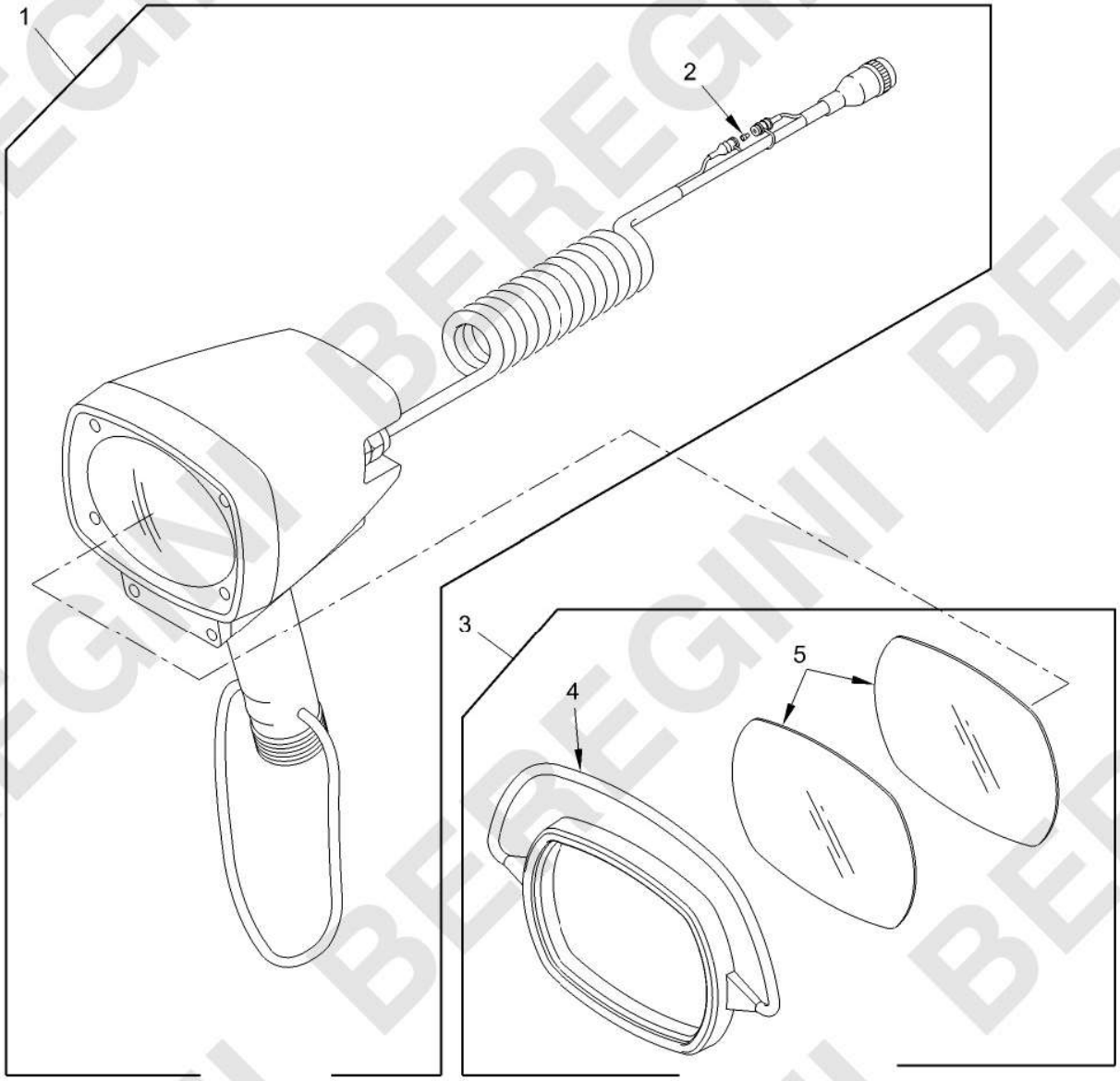

Figure 295. BC Spotlight/infrared Kit (VTHA/VTHB) - 13015188, 13015190

(1) ITEM NO.	(2) SMR CODE	(3) NSN	(4) CAGEC	(5) PART NUMBER	(6) DESCRIPTION AND USABLE ON CODE (UOC)	(7) QTY
					GROUP VTHA/VTHB BC SPOTLIGHT/INFRARED KIT	
					FIGURE 295 BC Spotlight/infrared Kit (VTHA/VTHB) - 13015188, 13015190	
1	PAFFF	6240-01-547-5202	19200	13007343	LAMP,HID	1
2	PAFZZ	5920-01-547-8757	1Y0K8	MDL-10	.FUSE,CARTRIDGE	1
3	PAFFF	6650-01-548-0297	19200	13007344	FILTER ASSY,INFRAR	1
4	PAFZZ	6650-01-547-8928	19200	13007339	.LENS,INFRARED FILT	2
5	XAFZZ		19200	13007340	.RETAINER,LENS,INFR	1
					END OF FIGURE	

BEREGINI BEREGINI BEREGINI

MAINTAINER

POWER LINE PROTECTION (VTHC/VTHCA) - 13015189, 13007325

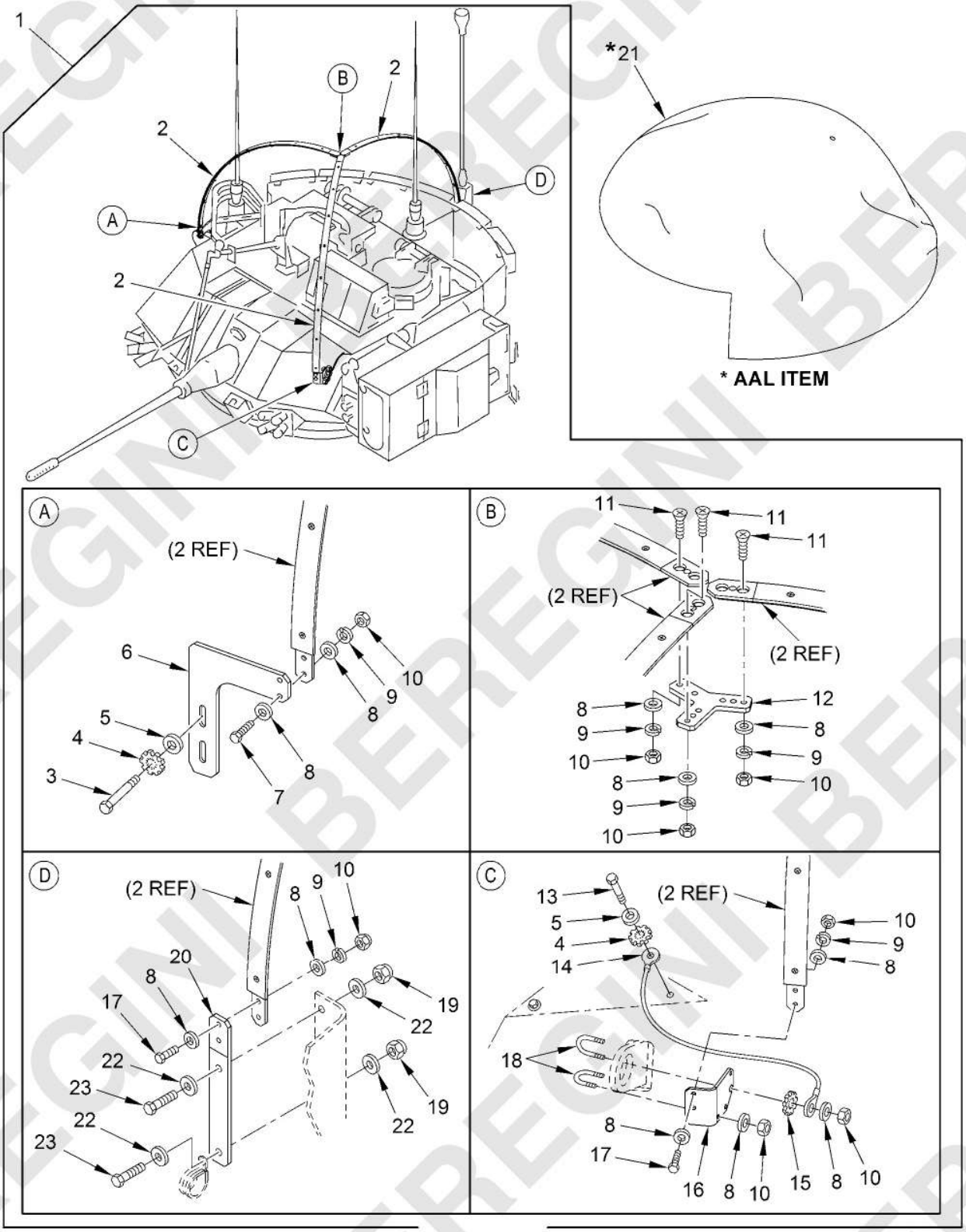

Figure 296. Power Line Protection (VTHC/VTHCA) - 13015189, 13007325

(1) ITEM NO.	(2) SMR CODE	(3) NSN	(4) CAGEC	(5) PART NUMBER	(6) DESCRIPTION AND USABLE ON CODE (UOC)	(7) QTY
					GROUP VTHC/VTHCA POWER LINE PROTECTION	
					FIGURE 296 Power Line Protection (VTHC/ VTHCA) - 13015189, 13007325	
1	PAFFF	5340-01-547-5204	19200	13007325	POWERLINE PROTECTIO	1
2	PAFZZ	5340-01-547-8566	19200	13007333	.SUPPORT,INSULATE	3
3	PAFZZ	5305-00-071-2075	80204	B1821BH050C300N	.SCREW,CAP,HEXAGON H	2
4	PAFZZ	5310-01-547-2709	39428	95795A035	.WASHER,LOCK	2
5	PAFZZ	5310-00-927-9400	19200	10910174-30	.WASHER,FLAT	3
6	PAFZZ	5340-01-547-8594	19200	13007337	.BRACKET,RIGHT	1
7	PAFZZ	5305-00-821-3869	05047	AES01C375A75AW9A91	.SCREW,CAP,HEXAGON H	2
8	PAFZZ	5310-00-877-5972	19200	10910174-3	.WASHER,FLAT	22
9	PAFZZ	5310-00-004-5033	80205	MS35338-46	.WASHER,LOCK	12
10	PAFZZ	5310-01-505-0245	81349	M45913/1-6CG5Z	.NUT,SELF-LOCKING,HE	16
11	PAFZZ	5305-01-547-8579	39428	90273A628	.SCREW,MACHINE	6
12	PAFZZ	5340-01-547-4019	19200	13007329	.BRACKET,CENTER	1
13	PAFZZ	5305-00-071-2070	80204	B1821BH050C175N	.SCREW,CAP,HEXAGON H	1
14	PAFZZ	6150-01-547-8946	19200	13007334	.LEAD,GROUND	1
15	PAFZZ	5310-01-547-2721	39428	95795A030	.WASHER,LOCK	1
16	PAFZZ	5340-01-547-8623	19200	13007328	.BRACKET,LEFT	1
17	PAFZZ	5305-00-725-2317	05047	AES01C375A50AW9A91	.SCREW,CAP,HEXAGON H	4
18	PAFZZ	5306-01-268-9090	39428	3043T36	.BOLT,U	2
19	PAFZZ	5310-01-505-0243	81349	M45913/1-8CG5Z	.NUT,SELF-LOCKING,HE	2
20	PAFZZ	5340-01-547-8612	19200	13007332	.BRACKET,REAR	1
21	PAFZZ	1080-01-564-9874	1X5J9	C2026	.NET,CAMOFLAGE,FIBER AAL ITEM IN TM 9-2350-439-10	1
22	PAFZZ	5310-00-866-4417	19207	10910174-5	.WASHER,FLAT	2
23	PAFZZ	5305-00-071-2071	05047	AES02C500B00AW9A81	.SCREW,CAP,HEXAGON H	2
					END OF FIGURE	

0297-3/4 blank

BEREGINI BEREGINI BEREGINI

MAINTAINER

SIGHT PROTECTION KIT (VTHF) - 13015187

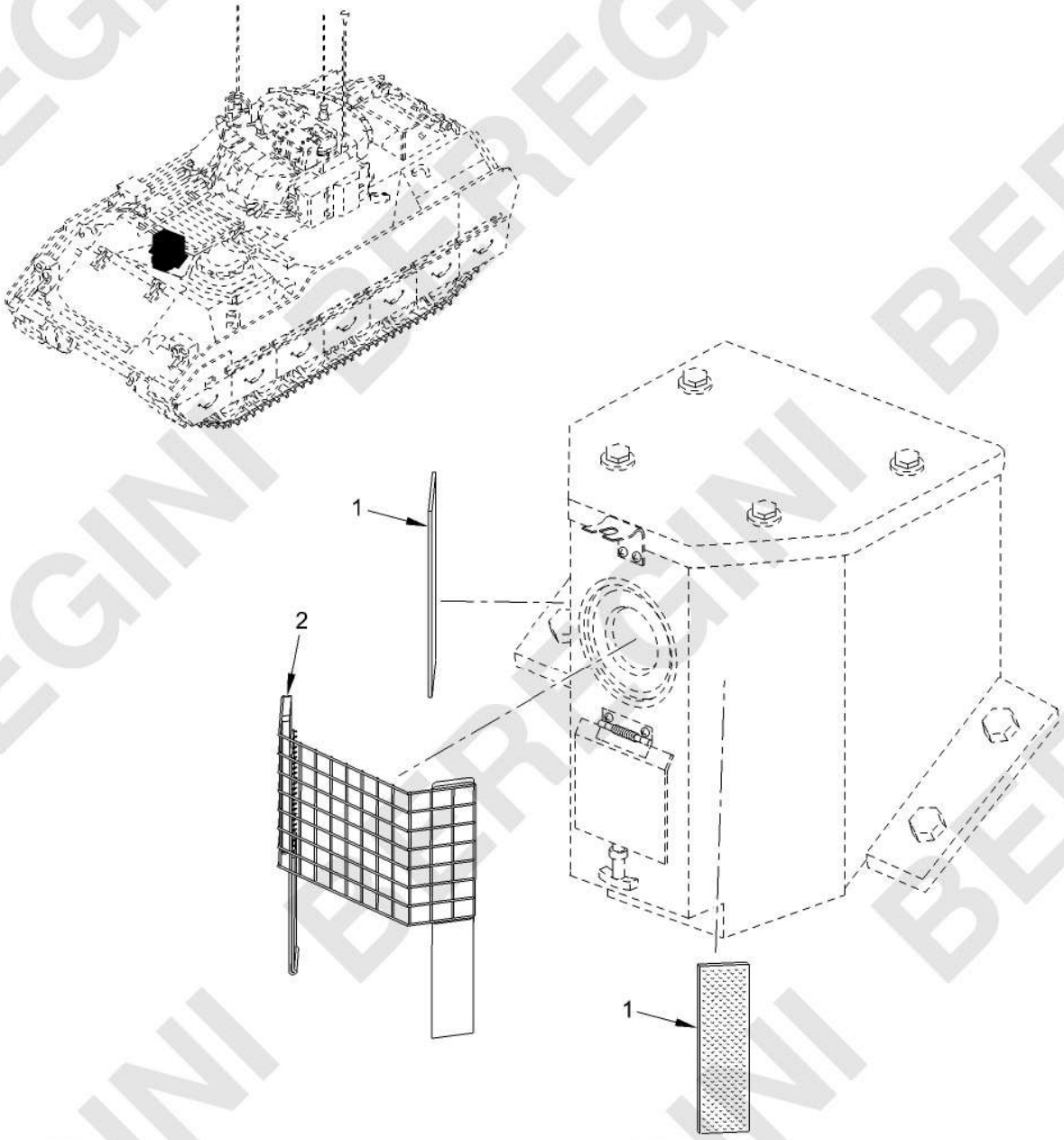

Figure 299. Sight Protection Kit (VTHF) - 13015187

(1) ITEM NO.	(2) SMR CODE	(3) NSN	(4) CAGEC	(5) PART NUMBER	(6) DESCRIPTION AND USABLE ON CODE (UOC)	(7) QTY
					GROUP VTHF SIGHT PROTECTION KIT	
					FIGURE 299 Sight Protection Kit (VTHF) - 13015187	
1	XAFZZ		19200	13007407-11	FASTENER TAPE,HOOK	2
2	PAFZZ	5340-01-622-3018	19200	13035114	GRILLE,METAL	1
					END OF FIGURE	

BEREGINI BEREGINI BEREGINI

MAINTAINER

CREW2, MOD KIT (VTJ) - 13015013

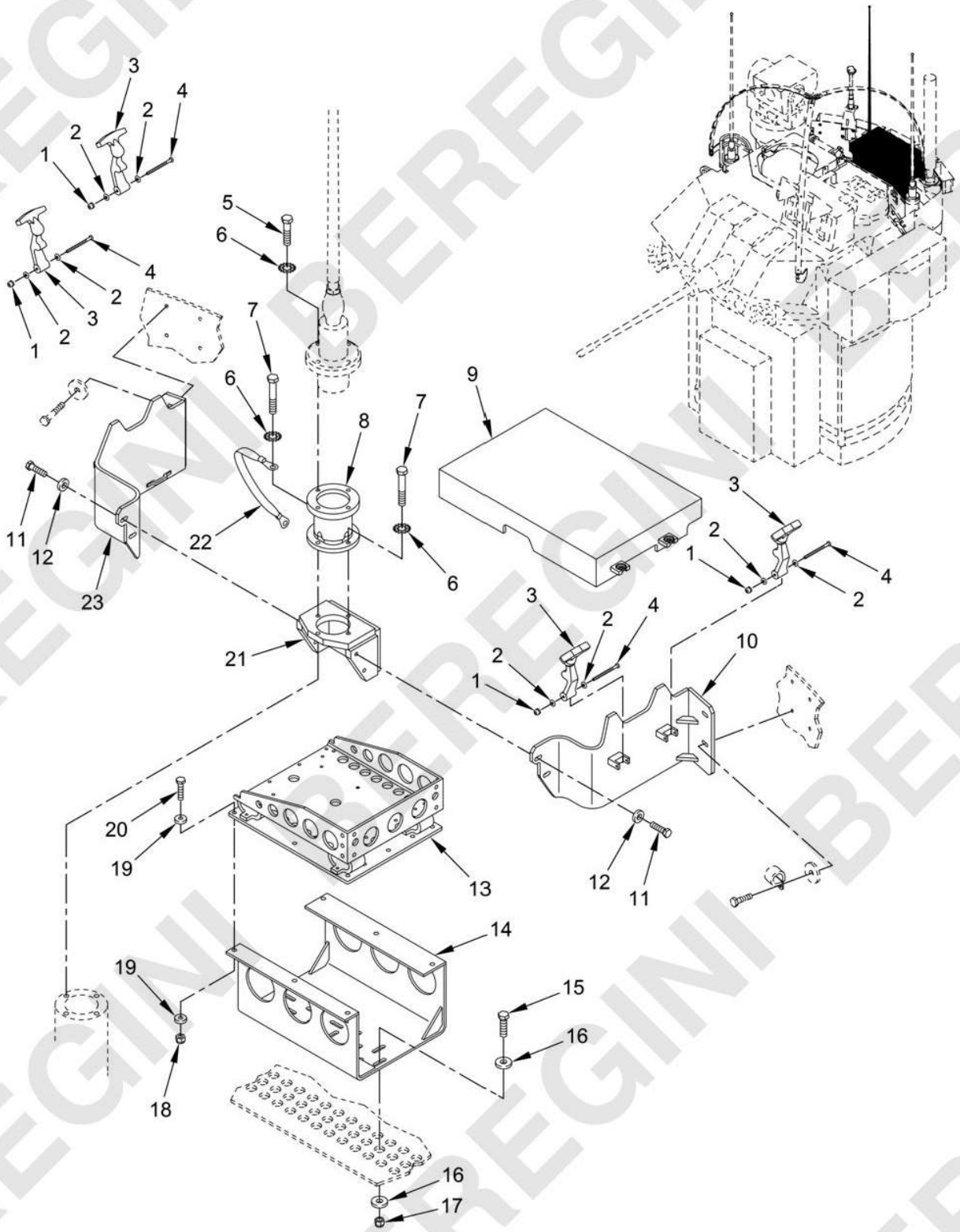

Figure 300. CREW2, Mod Kit (VTJ) - 13015013
(Sheet 1 of 5)

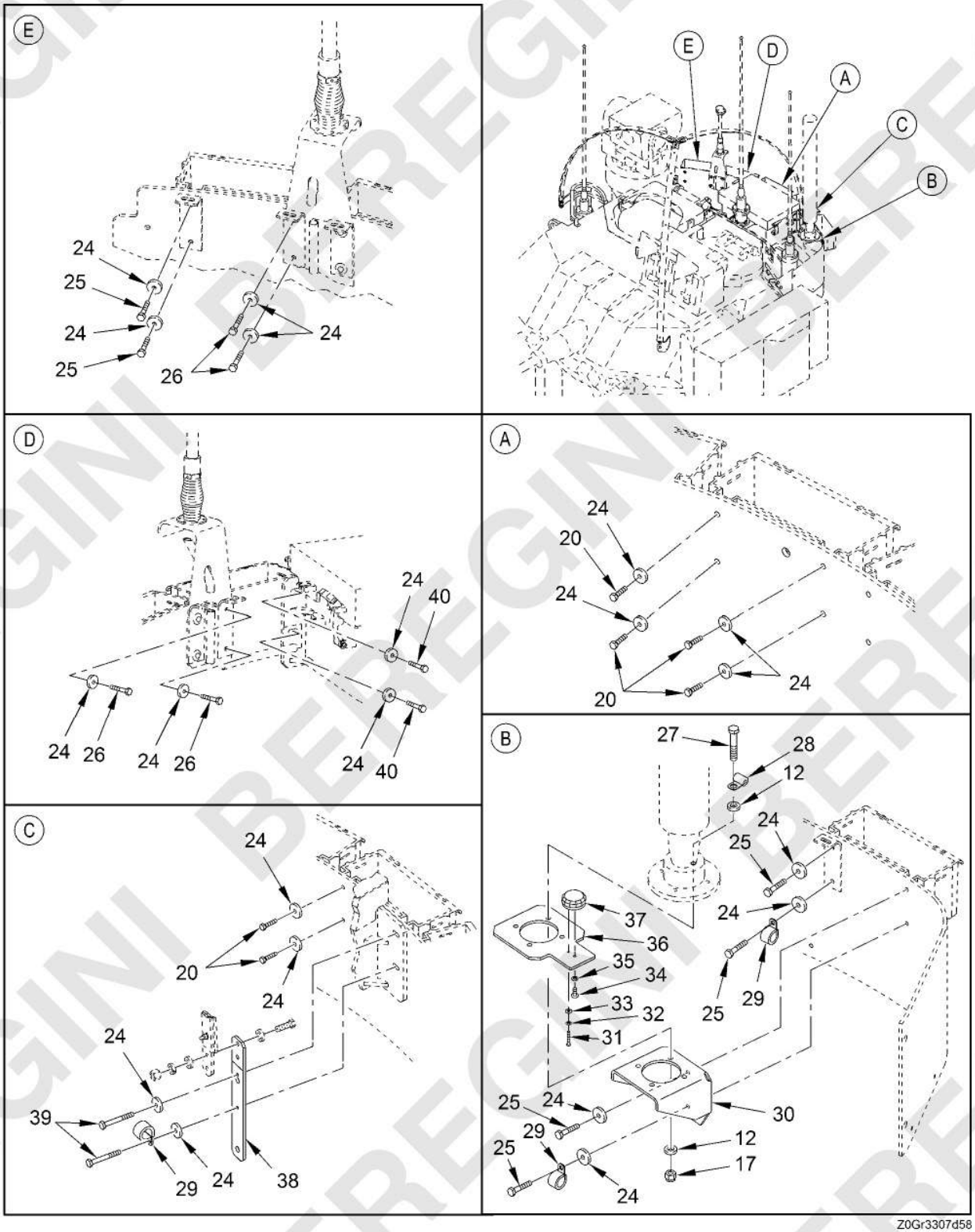

Figure 300. CREW2, Mod Kit (VTJ) - 13015013
(Sheet 2 of 5)

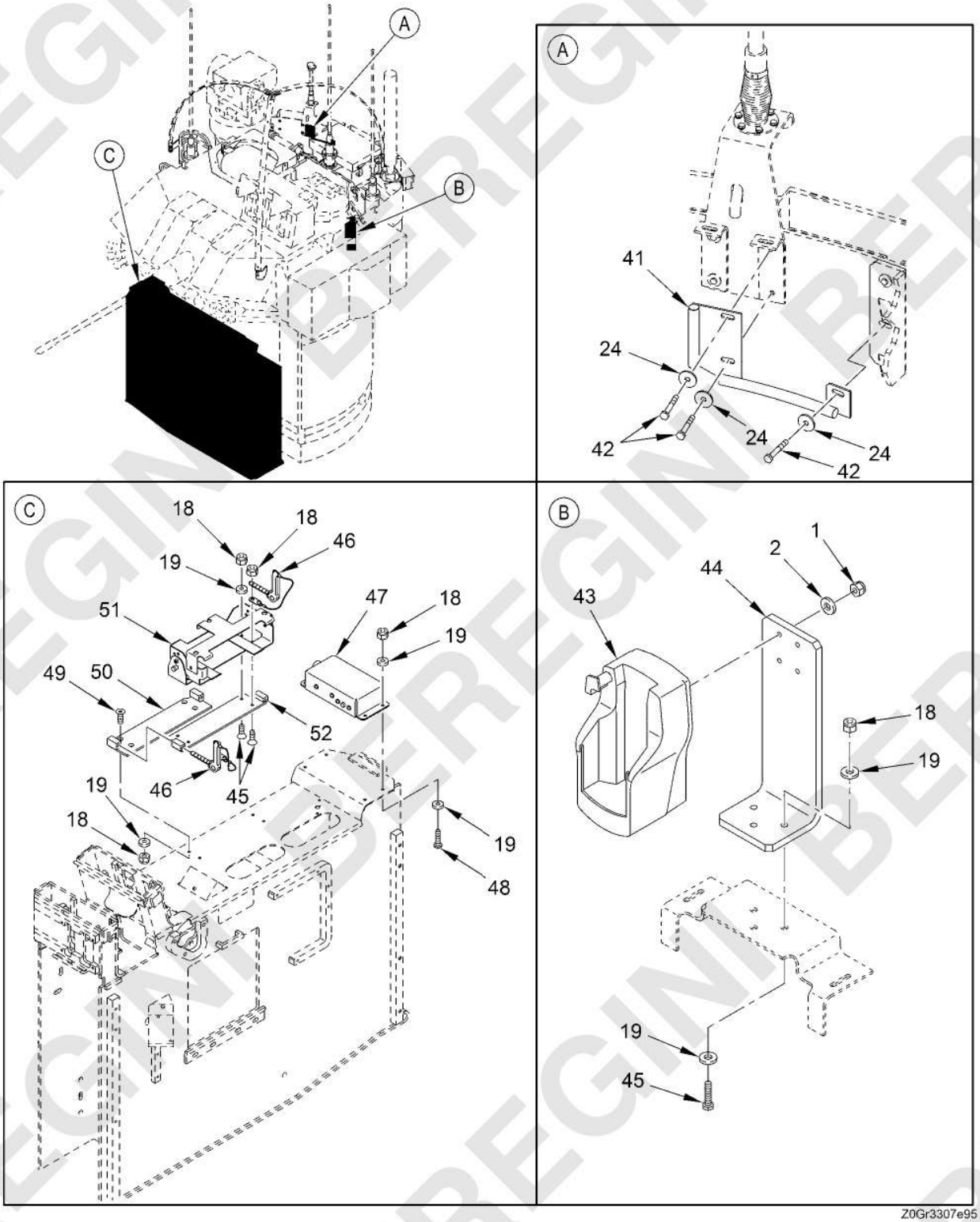

Figure 300. CREW2, Mod Kit (VTJ) - 13015013
(Sheet 3 of 5)

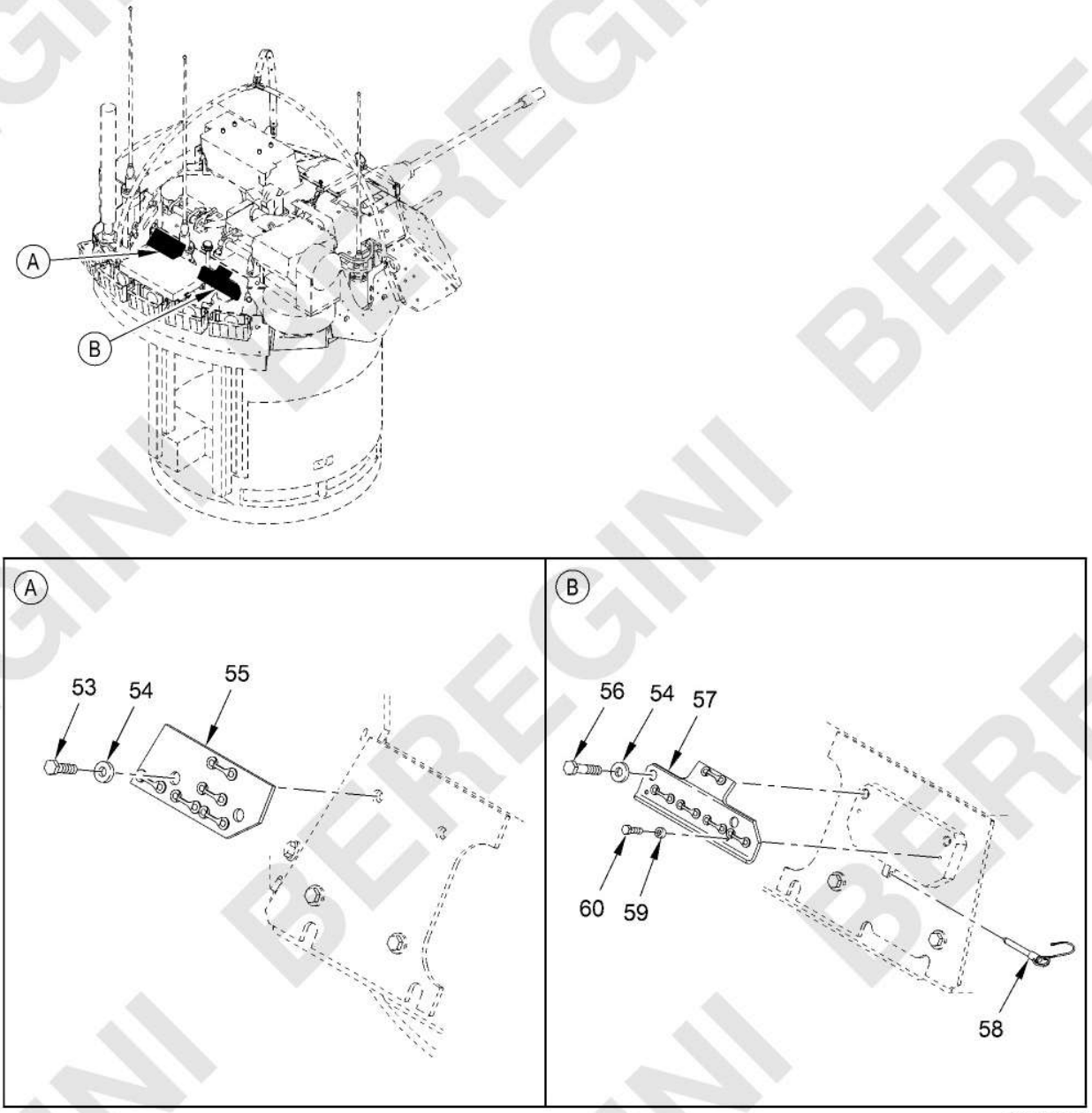

Figure 300. CREW2, Mod Kit (VTJ) - 13015013
(Sheet 4 of 5)

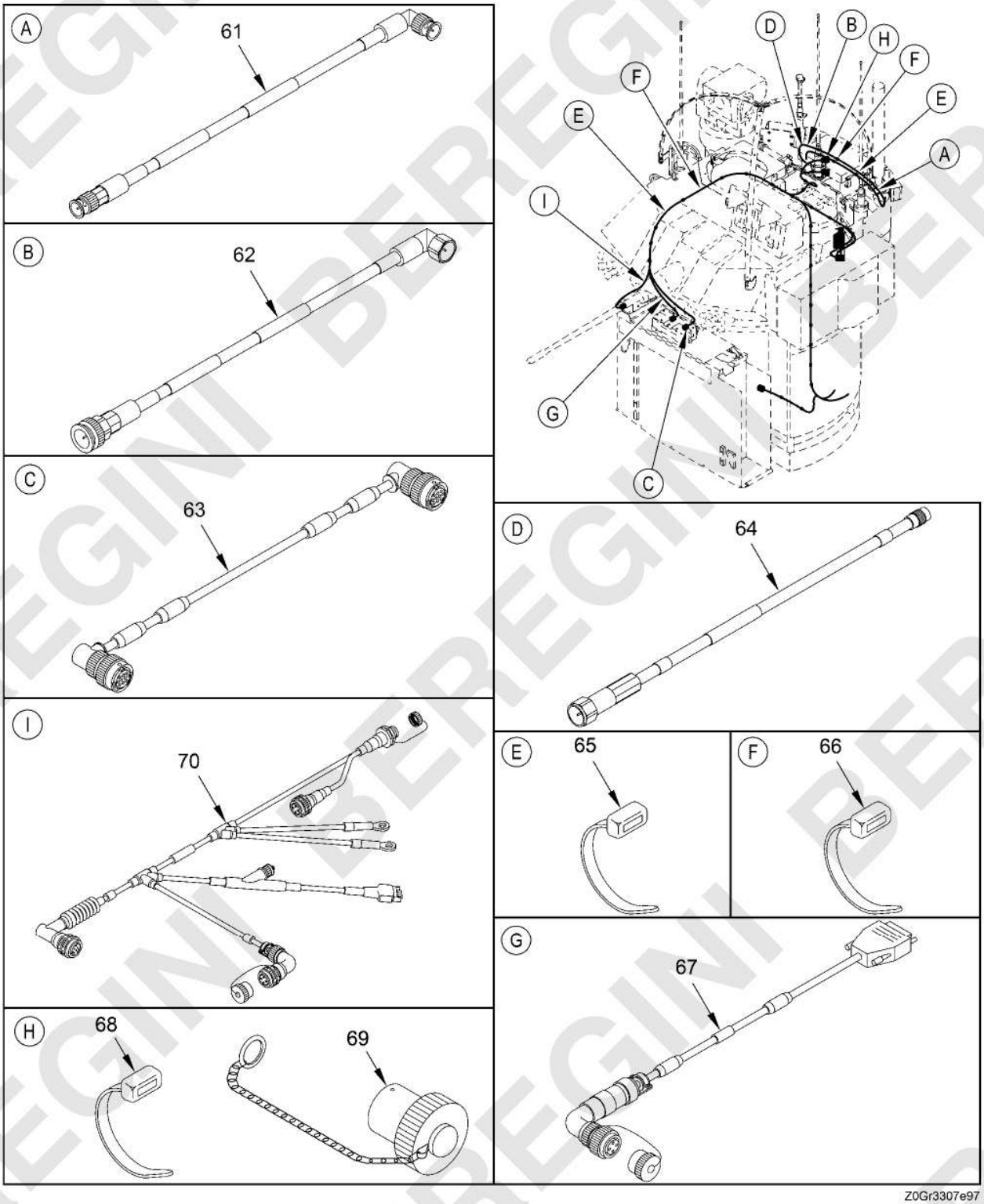

Figure 300. CREW2, Mod Kit (VTJ) - 13015013
(Sheet 5 of 5)

(1) ITEM NO.	(2) SMR CODE	(3) NSN	(4) CAGEC	(5) PART NUMBER	(6) DESCRIPTION AND USABLE ON CODE (UOC)	(7) QTY
					GROUP VTJ CREW2 MOD KIT	
					FIGURE 300 CREW2, Mod Kit (VTJ) - 13015013	
1	PAFZZ	5310-00-811-3494	80205	MS21044N08	NUT,SELF-LOCKING,HE	8
2	PAFZZ	5310-01-571-4769	05047	AEW24X164000EA1A91	WASHER,FLAT	12
3	PAFZZ	2540-01-345-6991	19200	13015028	LATCH,RUBBER	4
4	PAFZZ	5305-01-621-1078	80205	MS35206-254Z	SCREW,MACHINE	4
5	PAFZZ	5305-00-725-2317	05047	AES01C375A50AW9A91	SCREW,CAP,HEXAGON H	4
6	PAFZZ	5310-00-061-1258	96906	MS45904-76	WASHER,LOCK	8
7	PAFZZ	5305-00-638-8920	05047	AES01C375B25AW9A91	SCREW,CAP,HEXAGON H	4
8	PAFZZ	5340-01-621-1184	19200	13015023-8	BRACKET,MOUNTING	1
9	PAFZZ	5340-01-568-3550	19200	13015012	COVER,ARMOR	1
10	PAFZZ	5340-01-566-1551	19200	13015007	BRACKET,BUSTLE SUP	1
11	PAFZZ	5305-00-068-0511	05047	AES01C375A25AW9A91	SCREW,CAP,HEXAGON H	4
12	PAFZZ	5310-01-373-2547	19207	12387327-3	WASHER,FLAT	12
13	PAFZZ	5975-01-560-3035	28541	SRC1852A	RACK,ELECT EQUIPM	1
14	PAFZZ	5340-01-566-7868	19200	13015011	BRACKET,PRIMARY UN	1
15	PAFZZ	5305-00-688-2111	05047	AES01C375A37AW9A91	SCREW,CAP,HEXAGON H	6
16	PAFZZ	5310-00-987-1294	19207	10910174-16	WASHER,FLAT	12
17	PAFZZ	5310-01-516-3509	81349	M45913/1-6CG8Z	NUT,SELF-LOCKING,HE	10
18	PAFZZ	5310-01-531-7280	81349	M45913/1-4CG8Z	NUT,SELF-LOCKING,HE	21
19	PAFZZ	5310-00-395-3602	19200	10910174-34	WASHER,FLAT	32
20	PAFZZ	5305-00-225-3843	80204	B1821BH025C100N	SCREW,CAP,HEXAGON H	12
21	PAFZZ	5985-01-566-7866	19200	13015008	BRACKET,ANNTENA MO	1
22	PAFZZ	5999-01-342-2225	19207	12328623-1	STRIP,ELECTRICAL GR	1
23	PAFZZ	5340-01-566-1547	19200	13015006	BRACKET,BUSTLE SUP	1
24	PAFZZ	5310-00-058-1305	19207	10910174-20	WASHER,FLAT	20
25	PAFZZ	5305-00-068-0509	80204	B1821BH025C125N	SCREW,CAP,HEXAGON H	6
26	PAFZZ	5305-00-225-3841	05047	AES01C250A37AW9A91	SCREW,CAP,HEXAGON H	3
27	PAFZZ	5305-00-782-9489	05047	AES01C375B00AW9A91	SCREW,CAP,HEXAGON H	4
28	PAFZZ	5340-00-050-9077	96906	MS21333-119	CLAMP,LOOP	1
29	PAFZZ	5340-00-088-1254	80205	MS21333-104	CLAMP,LOOP	3
30	PAFZZ	5985-01-566-7896	19200	13015010	BRACKET,ANTENNA	1
31	PAFZZ	5305-01-625-6832	80205	MS35206-219Z	SCREW,MACHINE	1

(1) ITEM NO.	(2) SMR CODE	(3) NSN	(4) CAGEC	(5) PART NUMBER	(6) DESCRIPTION AND USABLE ON CODE (UOC)	(7) QTY
32	PAFZZ	5310-00-543-2410	80205	MS35338-40	WASHER,LOCK	1
33	PAFZZ	5310-00-782-1349	80205	MS15795-804	WASHER,FLAT	1
34	PAFZZ	5305-00-989-6265	80205	MS35207-262	SCREW,MACHINE	1
35	PAFZZ	5310-00-271-7454	96906	MS35338-119	WASHER,LOCK	1
36	PAFZZ	5340-01-620-8396	19200	13015024-1	PLATE,MOUNTING	1
37	PAFZZ	5985-01-622-9789	16236	ELRN-016229789	ANTENNA	1
38	PAFZZ	5340-01-656-2080	19200	13007332-1	BRACKET,REAR	1
39	PAFZZ	5305-00-071-2511	80204	B1821BH025C200N	SCREW,CAP,HEXAGON H	2
40	PAFZZ	5305-00-071-2509	80204	B1821BH025C150N	SCREW,CAP,HEXAGON H	2
41	PAFZZ	5975-01-620-9922	19200	13024650	PROTECTOR,ELECTRICA	1
42	PAFZZ	5305-00-071-2510	80204	B1821BH025C175N	SCREW,CAP,HEXAGON H	3
43	PAFZZ	5805-01-591-9698	64928	VCD7X00-P000R	PDA CRADLE	1
44	PAFZZ	5340-01-620-8398	19200	13015022-1	BRACKET,ANGLE	1
45	PAFZZ	5305-00-225-3842	05047	AES01C250A12AW9A91	SCREW,CAP,HEXAGON H	3
45	PAFZZ	5305-00-068-0508	05047	AES01C250750AW9A91	SCREW,CAP,HEXAGON H	8
46	PAFZZ	5315-01-621-5668	98524	EGP5C42TRL8	PIN,EXPANDING GRIP	2
47	PAFZZ	6130-01-566-3430	19200	13015015	BOX,POWER RELAY	1
48	PAFZZ	5305-00-988-1727	80205	MS35206-283	SCREW,MACHINE	4
49	PAFZZ	5305-01-380-0847	80205	MS24667-30Z	SCREW,CAP,SOCKET HE	8
50	PAFZZ	5340-01-620-6230	19200	13024882	PLATE,MOUNTING	1
51	PAFZZ	5340-01-560-2902	28541	SCP1600 ASM	BRACKET,MOUNTING	1
52	PAFZZ	5340-01-622-3110	19207	13024881	PLATE,MOUNTING	1
53	PAFZZ	5305-00-922-7994	05047	AES01C750B50AW9A91	SCREW,CAP,HEXAGON H	2
54	PAFZZ	5310-00-999-9438	19200	10910174-23	WASHER,FLAT	8
55	PAFZZ	5340-01-566-1539	19200	13015017	BRACKET,FOOTMAN LO	1
56	PAFZZ	5305-00-947-4356	80204	B1821BH075C350N	SCREW,CAP,HEXAGON H	2
57	PAFZZ	5340-01-566-1556	19200	13015009	BRACKET,FOOTMAN LO	1
58	PAFZZ	4010-01-237-1753	19207	12297780-3	WIRE ROPE ASSY,SING	1
59	PAFZZ	5310-00-011-5093	80205	MS35338-65	WASHER,LOCK	2
60	PAFZZ	5305-00-543-4372	05047	AES01C375750AW9A91	SCREW,CAP,HEXAGON H	2
61	PAFZZ	6150-01-567-4544	1GVT4	10168C	CABLE,RF ANTENNA	1
62	PAFZZ	6150-01-567-5365	1GVT4	10167C	CABLE,RF ANTENNA	1
63	PAFZZ	5995-01-567-5366	1YF27	A3312449-7	CABLE-RCU TO PRIMAR	1
64	PAFZZ	5995-01-605-3122	19200	12956607-1	CABLE,ANTENNA 2W81	1

(1) ITEM NO.	(2) SMR CODE	(3) NSN	(4) CAGEC	(5) PART NUMBER	(6) DESCRIPTION AND USABLE ON CODE (UOC)	(7) QTY
65	PAFZZ	5975-00-156-3253	81343	MS3367-2-9	STRAP,TIEDOWN,ELECT	30
66	PAFZZ	5975-00-451-5001	81343	MS3367-3-9	STRAP,TIEDOWN,ELECT	20
67	PAFZZ	5995-01-567-5367	1YF27	A3312450-3	CABLE-PDA TO RCU	1
68	PAFZZ	5975-00-727-5153	81343	MS3367-4-9	STRAP,TIEDOWN,ELECT	1
69	PAFZZ	5935-01-355-7539	81349	M39012/25-0019	COVER,ELECTRICAL CO	1
70	PAFZZ	5995-01-567-4542	1YF27	A3312451-5	WIRING HARNESS	1

END OF FIGURE

MAINTAINER

FIELD MAINTENANCE TOOL SET (T1AA) - 12587951

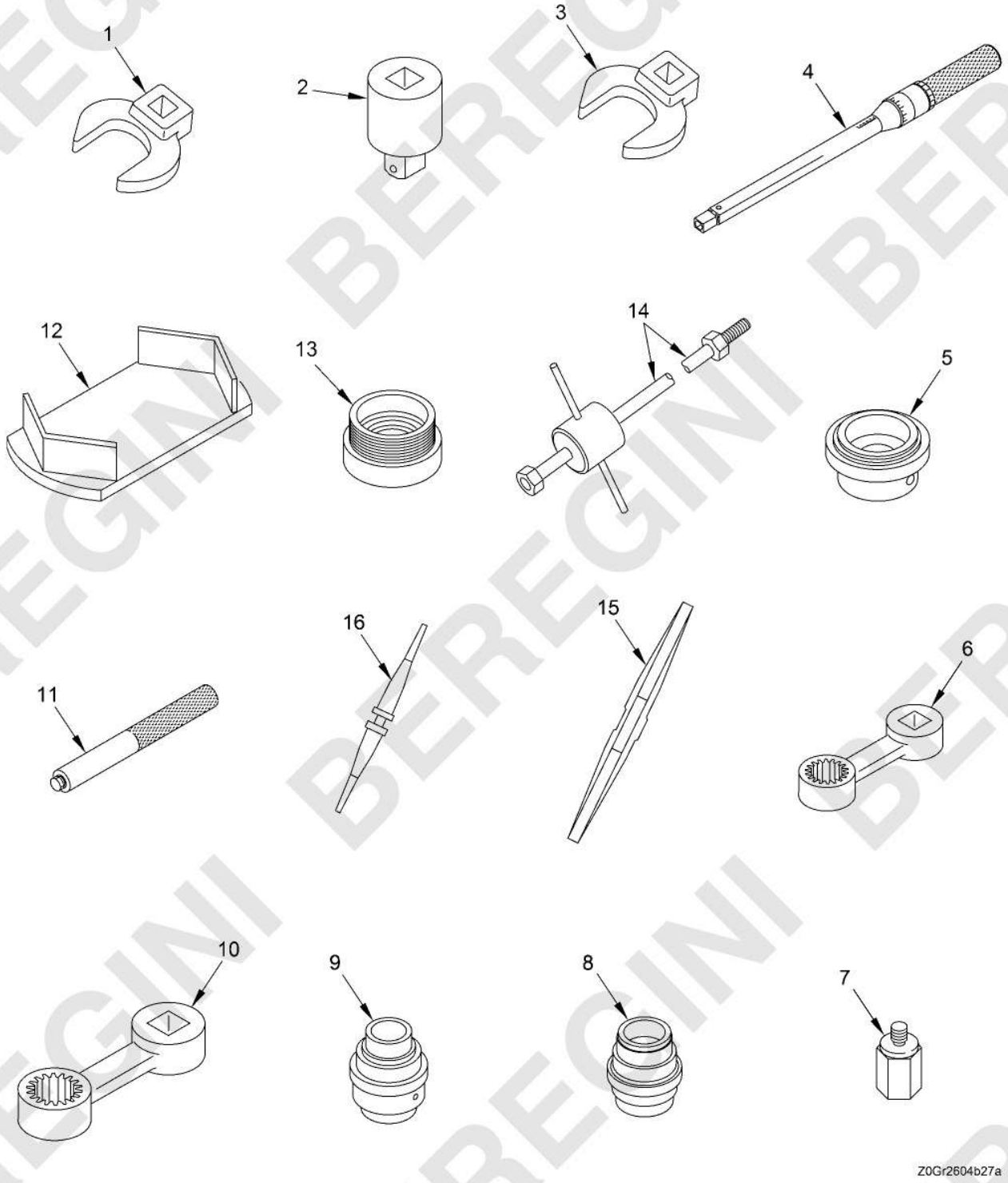

Figure 305. Field Maintenance Tool Set (T1AA) - 12587951
(Sheet 1 of 7)

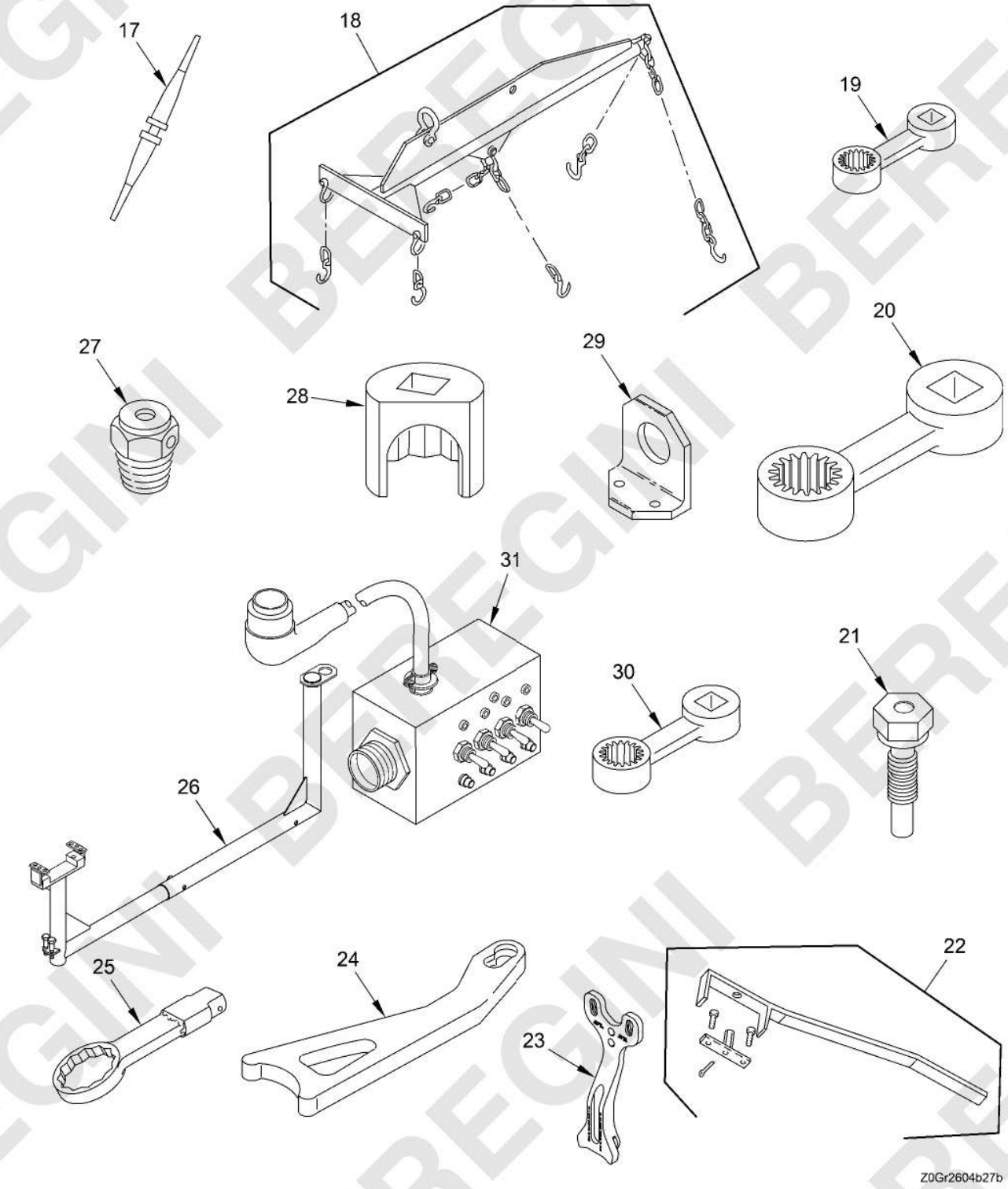

Figure 305. Field Maintenance Tool Set (T1AA) - 12587951
(Sheet 2 of 7)

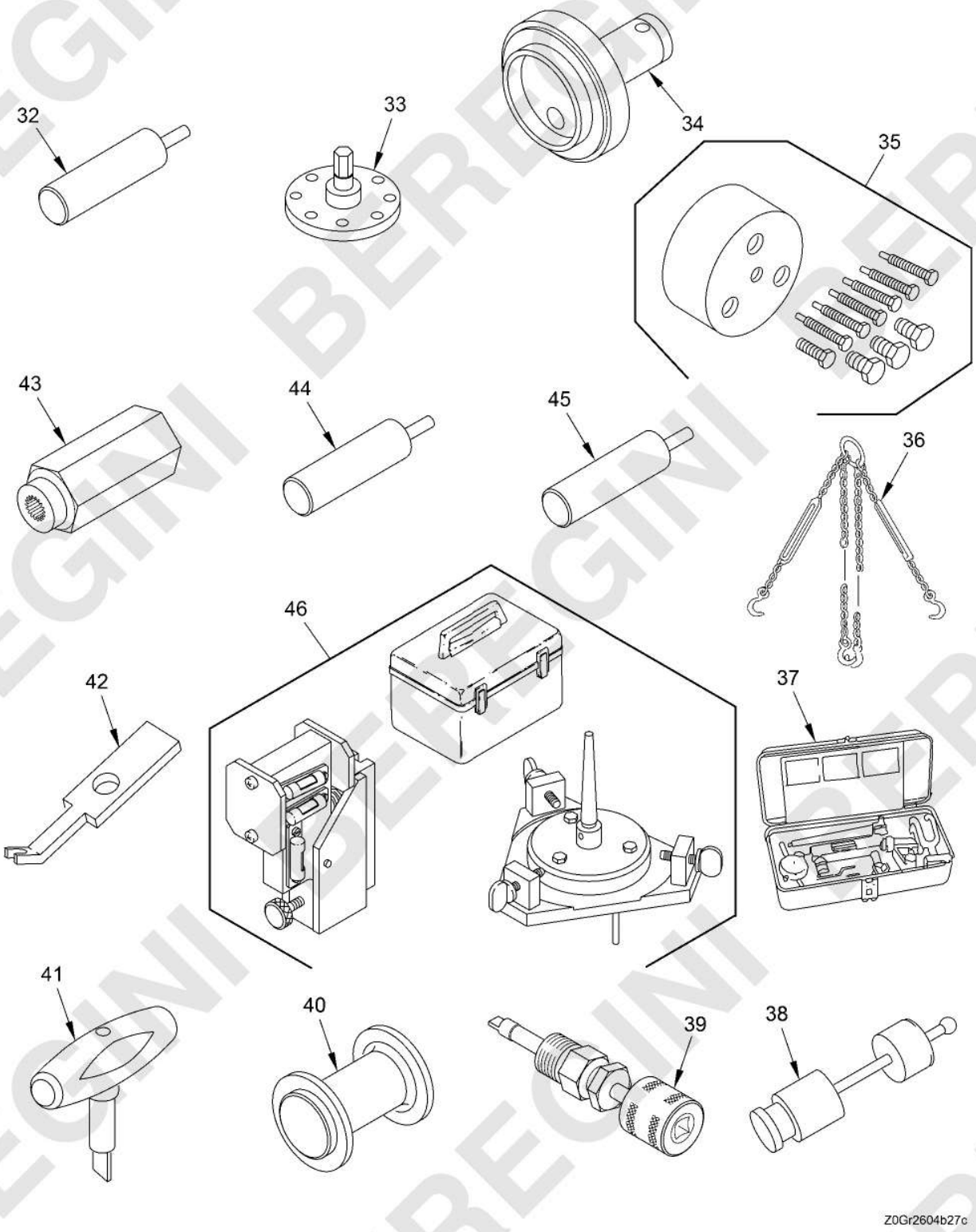

Figure 305. Field Maintenance Tool Set (T1AA) - 12587951
(Sheet 3 of 7)

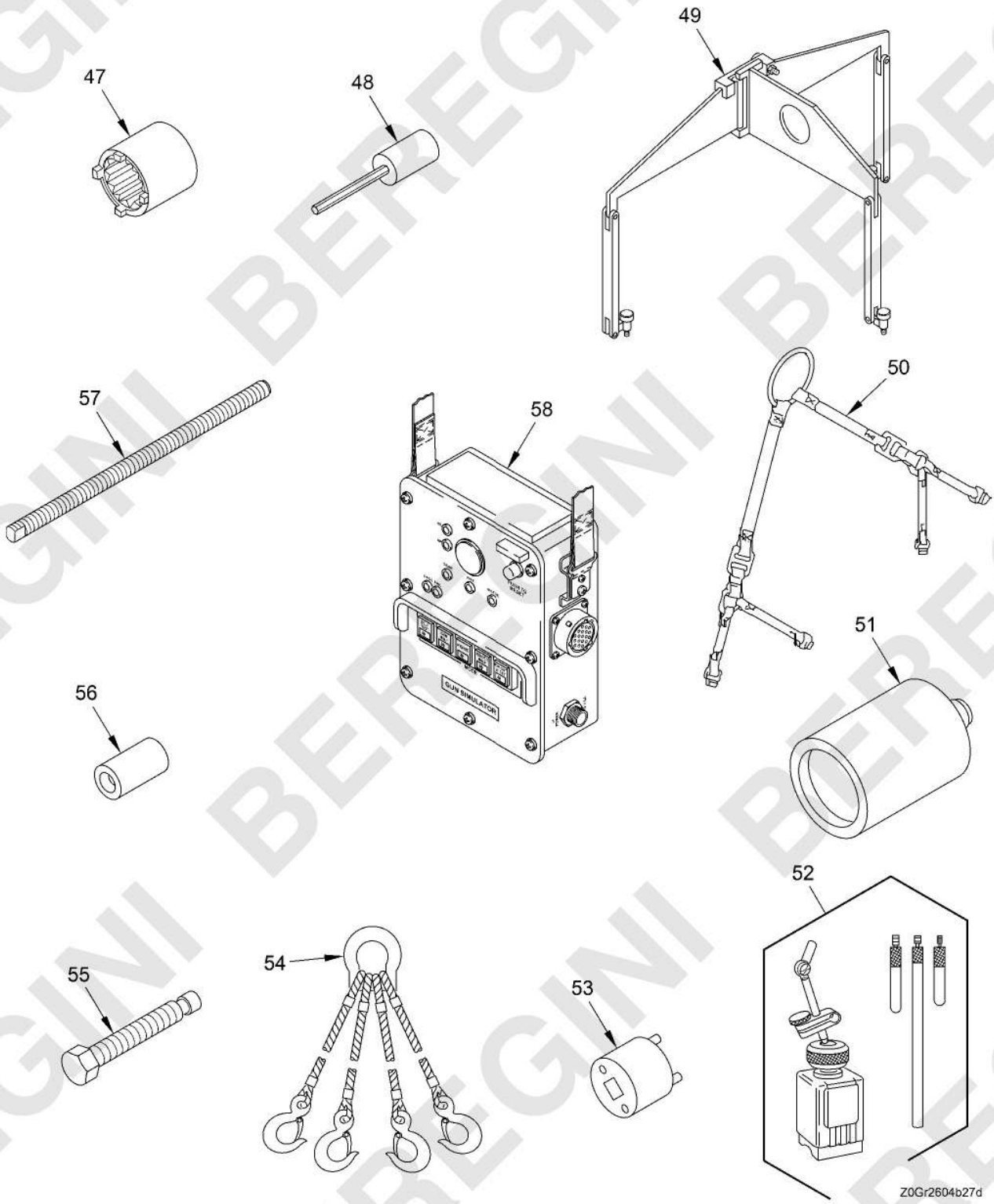

Figure 305. Field Maintenance Tool Set (T1AA) - 12587951
(Sheet 4 of 7)

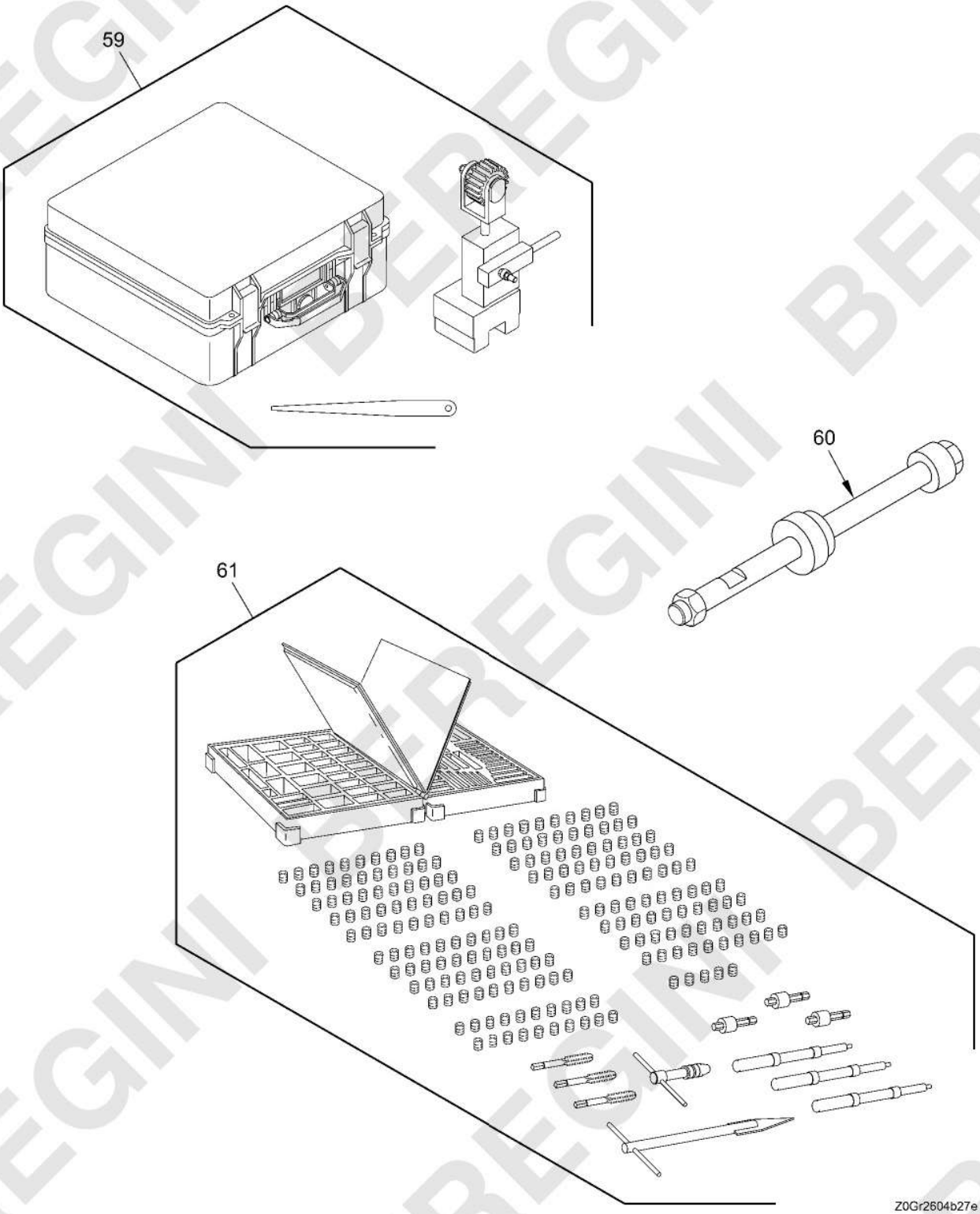

Figure 305. Field Maintenance Tool Set (T1AA) - 12587951
(Sheet 5 of 7)

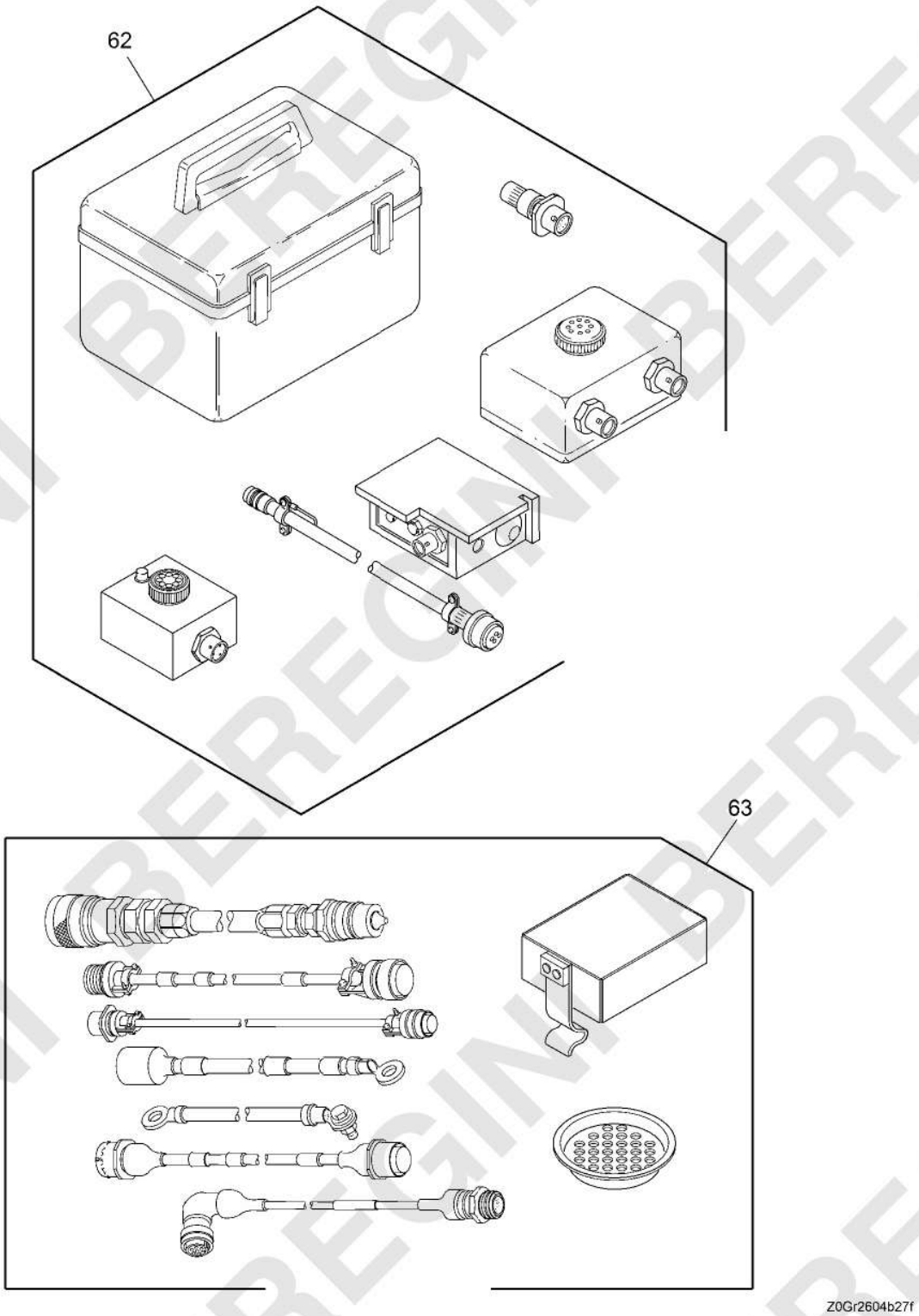

Figure 305. Field Maintenance Tool Set (T1AA) - 12587951
(Sheet 6 of 7)

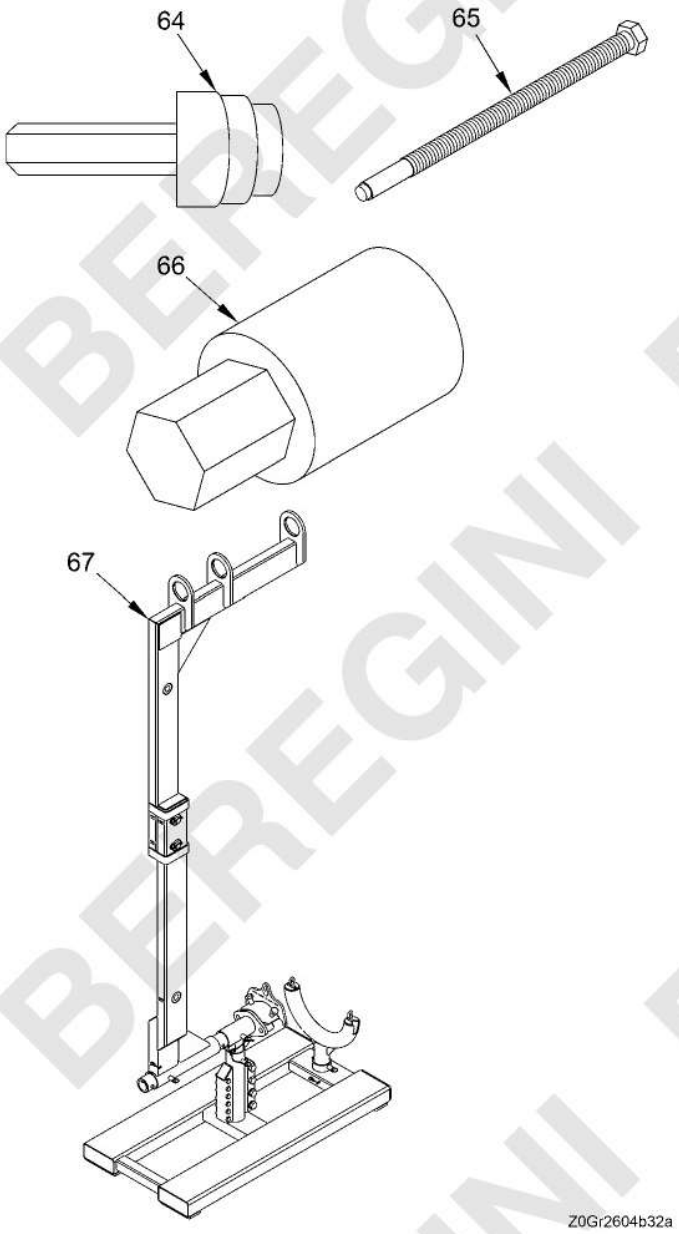

Figure 305. Field Maintenance Tool Set (T1AA) - 12587951
(Sheet 7 of 7)

(1) ITEM NO.	(2) SMR CODE	(3) NSN	(4) CAGEC	(5) PART NUMBER	(6) DESCRIPTION AND USABLE ON CODE (UOC)	(7) QTY
					GROUP T1AA FIELD MAINTENANCE TOOL SET	
					FIGURE 305 Field Maintenance Tool Set (T1AA) - 12587951	
1	PAFZZ	5120-00-293-2562	63704	1168	CROWFOOT ATTACHMENT	1
2	PAFZZ	5120-00-227-8104	55719	LA72	ADAPTER,SOCKET WREN	1
3	PAFZZ	5120-00-293-1283	688L6	1139	CROWFOOT ATTACHMENT	1
4	PAFZZ	5120-00-001-5583	03705	CH-150F	WRENCH,TORQUE	1
5	PAFZZ	5120-01-114-7392	19207	12296956	INSTALLING TOOL,BEA	1
6	PAFZZ	5120-01-115-1891	19207	12298105-1	ADAPTER,TORQUE WREN	1
7	PAFZZ	5120-01-115-4920	19207	12298092	EXTRACTOR,TORSION B	1
8	PAFZZ	5120-01-120-2894	19207	12296957	INSERTER,BEARING AN	1
9	PAFZZ	5120-01-115-1811	19207	12293050	BEARING INSTALLER	1
10	PAFZZ	5120-01-115-1893	19207	12298105-3	ADAPTER,TORQUE WREN	1
11	PAFZZ	5120-01-115-1812	19207	12295566	HANDLING TOOL,DETEN	1
12	PAFZZ	5120-01-115-4943	19207	12298104	WRENCH,SPANNER	1
13	PAFZZ	4730-00-516-3011	58536	AA-59616BDQBDBA	BUSHING,PIPE	1
14	PAFZZ	5120-00-557-3615	19207	5573615	PULLER,SLIDE	1
15	PAFZZ	5120-00-915-4587	K1316	M15570-20	INSERTER AND REMOVE	1
16	PAFZZ	5120-00-915-4588	81349	M81969/14-03	INSERTER AND REMOVE	1
17	PAFZZ	5120-00-157-3138	81349	M81969/14-04	INSERTER AND REMOVE	1
18	PEFFF	4910-01-212-5040	19207	12350701	SLING,ENGINE AND TR SEE FIG. 306 FOR BREAKDOWN	1
19	PAFZZ	5120-00-399-1157	80064	2588756	ADAPTER,TORQUE WREN	1
20	PAFZZ	5120-00-399-1154	80064	2588757	ADAPTER,TORQUE WREN	1
21	PEFFF	4910-01-118-2879	19207	12298145	REMOVER,SHOCK ABSOR SEE FIG. 307 FOR BREAKDOWN	1
22	PAFZZ	4910-01-128-2670	15434	3375058	ADJUSTING TOOL,BELT	1
23	PAFZZ	4910-01-591-5504	19207	12496775	LIFTER, ROAD WHEEL	1
24	PAFZZ	4910-01-118-7711	19207	12298091	LIFTER,ROAD WHEEL	1
25	PAFZZ	5120-01-315-5708	03705	LB244	ADAPTER,TORQUE WREN	1
26	PEFFF	4910-01-672-8973	19207	12589796	SLING, FINAL DRIVE SEE FIG. 308 FOR BREAKDOWN	1
27	PAFZZ	4820-00-542-5683	96906	MS35670-4B	VALVE,SAFETY RELIEF	1
28	PAFZZ	5120-01-311-2656	15434	3823488	SOCKET,NOZZLE,START	1
29	PAFZZ	5340-01-131-1937	19207	12300289	PAD EYE	1

(1) ITEM NO.	(2) SMR CODE	(3) NSN	(4) CAGEC	(5) PART NUMBER	(6) DESCRIPTION AND USABLE ON CODE (UOC)	(7) QTY
30	PAFZZ	5120-01-115-1892	19207	12298105-2	ADAPTER,TORQUE WREN	1
31	PEFFF	4910-01-478-3594	19207	12471160	TEST BOX,FUEL PUMP SEE FIG. 311 FOR BREAKDOWN	1
32	PAFZZ	5120-00-708-2641	19207	7082641	DRIVER,LOCKKRING	1
33	PAFZZ	5120-01-598-4754	0B8S3	4918888	REMOVER,FLANGE,CRAN	1
34	PAFZZ	5120-01-128-2865	0B8S3	ST1108	INSERTER,SEAL	1
35	PAFZZ	5120-01-128-2867	0B8S3	3375111	INSERTER AND REMOVE	1
36	PEFFF	4910-01-166-2052	19207	12323405	SLING,TRANSMISSION	1
37	PAFZZ	4910-00-548-7984	15434	3823610	ADJUSTMENT KIT,INJE	1
38	PAFZZ	5120-00-116-7604	0B8S3	3823024	PULLER, INJECTOR	1
39	PAFZZ	4910-00-150-5805	34623	MA326-21373	ADJUSTING TOOL	1
40	PAFZZ	9999-01-115-1895	19207	11629671	INSERTER,SEAL	1
41	PAFZZ	5120-01-348-0959	0B8S3	3376592	WRENCH,TORQUE	1
42	PAFZZ	5120-01-343-9634	0B8S3	3823348	ADJUSTING TOOL,VALV	1
43	PAFZZ	5120-01-407-9662	1PGC0	R1114W	WRENCH,INSERT	1
44	PAFZZ	5120-01-165-0488	1PGC0	R112D	DRIVE TOOL,LOCKRING	1
45	PAFZZ	5120-00-776-1858	83324	R110D	DRIVER,LOCKRING	1
46	PEFFF	1005-01-252-4280	19207	12313787	LEVEL,SUPPORT AND C SEE FIG. 313 FOR BREAKDOWN	1
47	PAFZZ	5120-01-138-4093	19207	12298102	SOCKET,WRENCH,FACE	1
48	PAFZZ	5120-01-202-1709	63003	CTM5900	SCREWDRIVER ATTACM	1
49	PEFFF	1240-01-472-8348	19207	12293043-1	INSTALLATION DEVICE SEE FIG. 312 FOR BREAKDOWN	1
50	PAFZZ	4931-01-155-2676	82577	1129533	HANDLING DEVICE,LAU	1
51	PAFZZ	5315-01-208-2266	19207	12317161	PIN,SHOULDER,HEADLE	1
52	PAFZZ	5895-01-203-2782	19200	9379296	INDICATOR SUBASSEMB	1
53	PAFZZ	5120-01-172-2863	19207	12317182	SOCKET,WRENCH,FACE	1
54	PAFZZ	3940-00-221-1911	80064	2586980	SLING AND WIRE ROPE	1
55	PAFZZ	5305-01-118-1480	19207	12298670	SETSCREW	1
56	PAFZZ	5365-01-115-3125	19207	12298669	SPACER,REMOVAL	1
57	PAFZZ	5307-01-115-5403	19207	12298671	STUD,CONTINUOUS THR	1
58	PAFZZ	4910-01-271-1464	19207	12335670	GUN SIMULATOR,ASSY	1
59	PAFZZ	5180-01-560-4244	19200	13015165	TOOL KIT,VEHICULAR	1
60	PAFZZ	5210-01-329-4860	19200	12535035	GAGE,CANNON BORE ER	1
61	PAFZZ	5180-01-153-2795	19200	12524035	TOOL KIT,SCREW THRE	1

(1) ITEM NO.	(2) SMR CODE	(3) NSN	(4) CAGEC	(5) PART NUMBER	(6) DESCRIPTION AND USABLE ON CODE (UOC)	(7) QTY
62	PEFFF	4940-01-565-8793	19207	12496683	AFES,TS BIT	1
63	PEFFF	4910-01-115-6283	19207	12298101	GROUND HOP KIT SEE FIG. 316 FOR BREAKDOWN	1
64	PAFZZ	4910-01-097-6948	34623	MA326-21113	MANDREL,SEAL,THERMO	1
65	PAFZZ	5305-01-148-8884	19207	12294540	SCREW,EXTERNALLY RE	1
65	PAFZZ	5120-01-254-1497	1PGCO	CR13W	INSERTER, SCREW THREAD INSERT	1
66	PAFZZ	5130-01-666-3849		J075903/4	SCREWDRIVER ATTACHMENT, SOCKET WR, 3/4 INCH	1
66	PEFFF			12652287	LIFTING TOOL, FINAL DRIVE AND SPROCKET CARRIER SEE FIGURE 297A FOR BREAKDOWN	1
					END OF FIGURE	

BEREGINI BEREGINI BEREGINI

MAINTAINER

SLING, ENGINE AND TRANSMISSION (T1AAA) - 12350701

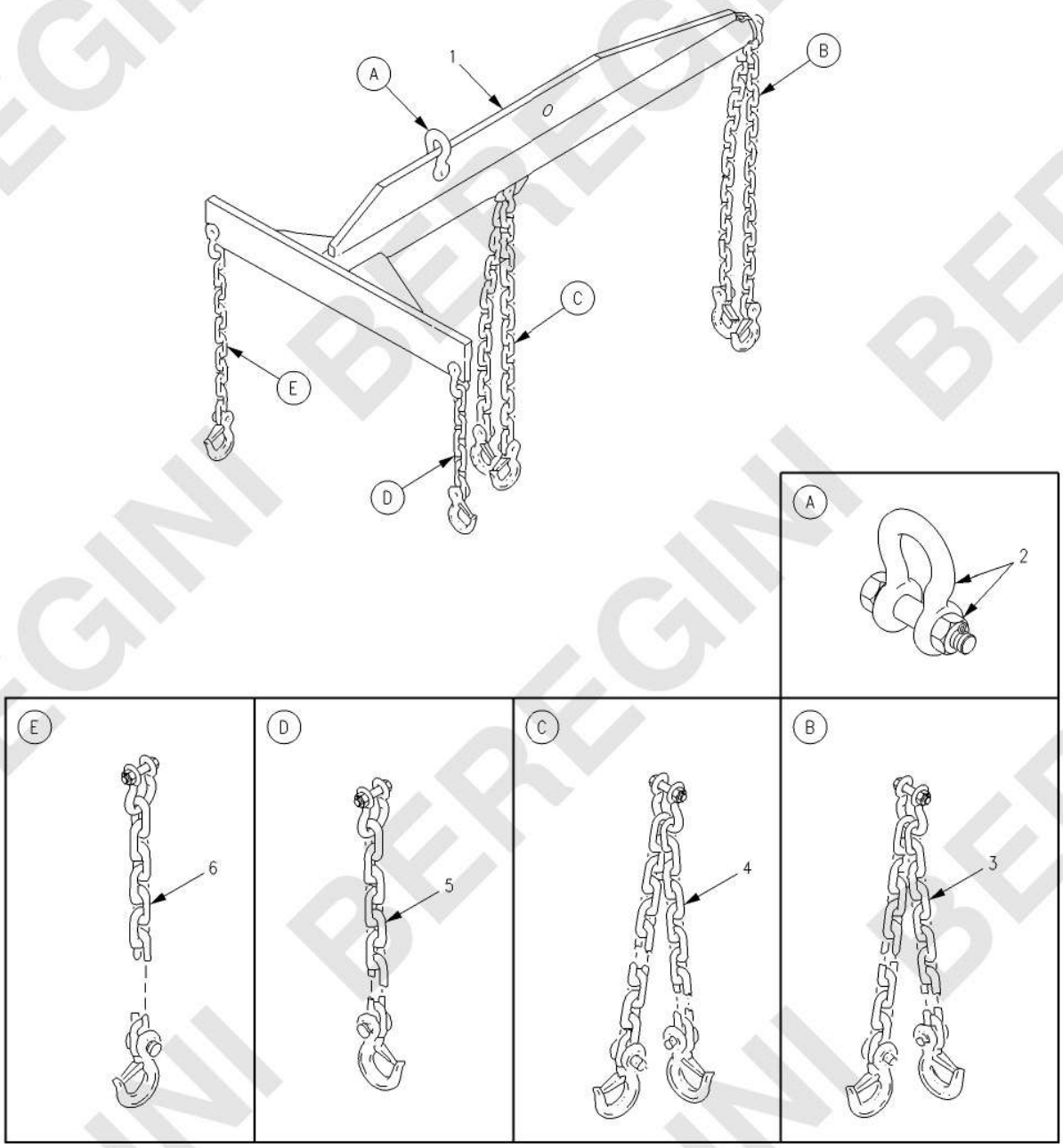

Figure 306. Sling, Engine and Transmission (T1AAA) - 12350701

(1) ITEM NO.	(2) SMR CODE	(3) NSN	(4) CAGEC	(5) PART NUMBER	(6) DESCRIPTION AND USABLE ON CODE (UOC)	(7) QTY
					GROUP T1AAA ENGINE AND TRANSMISSION SLING	
					FIGURE 306 Sling, Engine and Transmission (T1AAA) - 12350701	
1	XAFZZ		19207	12350701-10	JACKING BEAM,DUAL W	1
2	PAFZZ	4030-01-187-0964	19207	12328579	SHACKLE	1
3	PAFZZ	3940-01-229-0506	19207	12350723	SLING MULTIPLE LEG	1
4	PAFZZ	3940-01-229-0507	19207	12350724	SLING MULTIPLE LEG	1
5	PAFZZ	4010-01-229-8307	19207	12350722	CHAIN ASSEMBLY,SING	1
6	PAFZZ	4010-01-254-1421	19207	12350721	CHAIN ASSEMBLY,SING	1
					END OF FIGURE	

BEREGINI BEREGINI BEREGINI

MAINTAINER

REMOVER, SHOCK ABSORBER (T1AAB) - 12298145

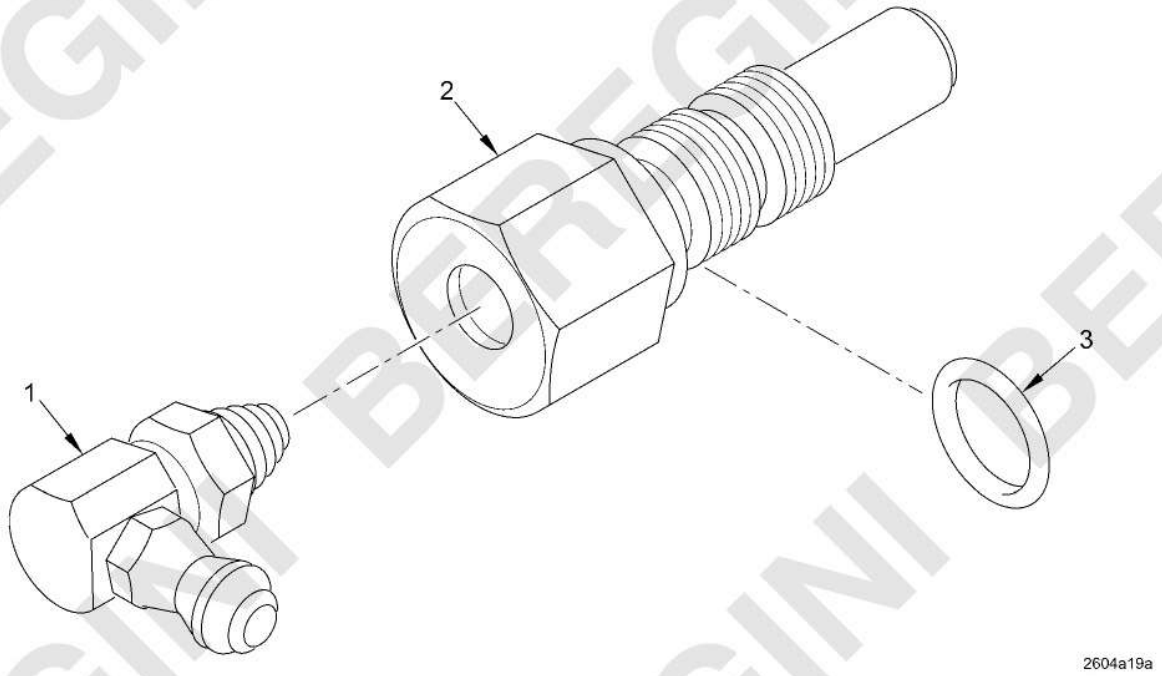

Figure 307. Remover, Shock Absorber (T1AAB) - 12298145

(1) ITEM NO.	(2) SMR CODE	(3) NSN	(4) CAGEC	(5) PART NUMBER	(6) DESCRIPTION AND USABLE ON CODE (UOC)	(7) QTY
					GROUP T1AAB SHOCK ABSORBER REMOVER	
					FIGURE 307 Remover, Shock Absorber (T1AAB) - 12298145	
1	PAFZZ	4730-00-172-0034	96906	MS15003-6	FITTING,LUBRICATION	1
2	XAFZZ		19207	12298145-1	REMOVER	1
3	PCFZZ	5331-00-599-2934	81343	MS28775-112	O-RING	1
					END OF FIGURE	

BEREGINI BEREGINI BEREGINI

MAINTAINER

SLING, FINAL DRIVE (T1AAC) - 12589796

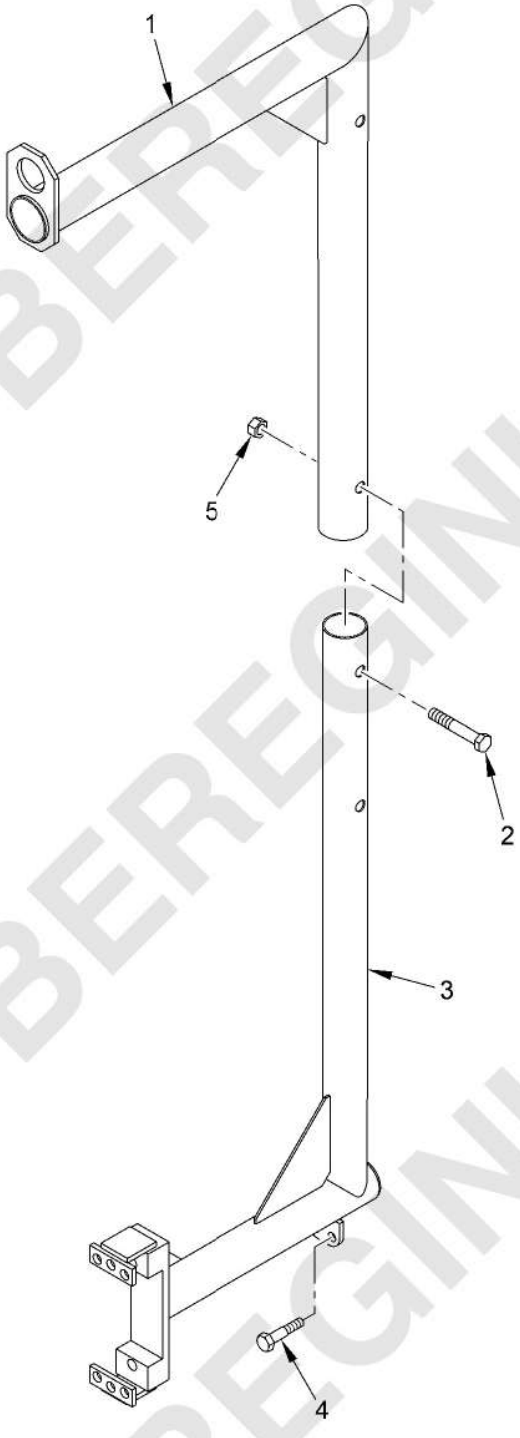

Figure 308. Sling, Final Drive (T1AAC) - 12589796

(1) ITEM NO.	(2) SMR CODE	(3) NSN	(4) CAGEC	(5) PART NUMBER	(6) DESCRIPTION AND USABLE ON CODE (UOC)	(7) QTY
					GROUP T1AAC FINAL DRIVE SLING	
					FIGURE 308 Sling, Final Drive (T1AAC) - 12589796	
1	XAFZZ		19207	12316850	FRAME,UPPER,LIFTING	1
2	PAFZZ	5305-00-947-4360	80204	B1821BH075C450N	SCREW,CAP,HEXAGON H	1
3	XAFZZ		19207	12589797	FRAME,LOWER,LIFTING	1
4	PAFZZ	5305-01-460-4756	80204	B1821BH075300N		2
5	PAFZZ		96906	12578708-075	NUT,PLAIN,HEXAGON	1
					END OF FIGURE	

BEREGINI BEREGINI BEREGINI

MAINTAINER

LIFTING TOOL, FINAL DRIVE AND SPROCKET CARRIER (T1AAC) - 12652287

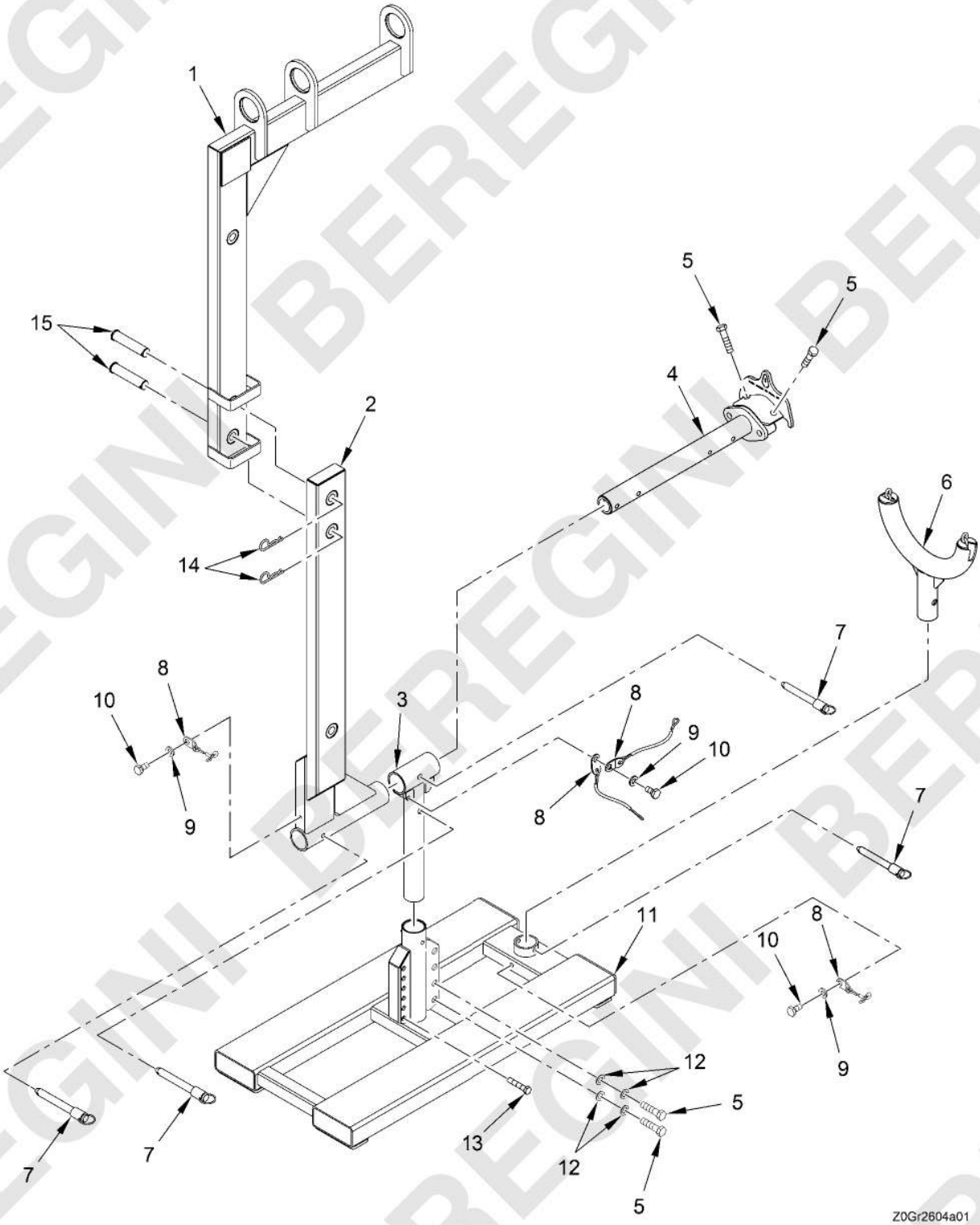

Figure 309. Lifting Tool, Final Drive and Sprocket Carrier (T1AAC) - 12652287

(1) ITEM NO.	(2) SMR CODE	(3) NSN	(4) CAGEC	(5) PART NUMBER	(6) DESCRIPTION AND USABLE ON CODE (UOC)	(7) QTY
					GROUP T1AAC Lifting Tool, Final Drive and Sprocket Carrier	
					FIGURE 309 Lifting Tool, Final Drive and Sprocket Carrier (T1AAC) - 12652287	
1	XAFZZ		19207	12628433	FRAME,UPPER,LIFTING TOOL	1
2	XAFZZ		19207	12628448	FRAME, LOWER, LIFTING TOOL	1
3	XAFZZ		19207	12628449	T-ADAPTER, LIFTING TOOL	1
4	XAFZZ		19207	12628441	ADAPTER, FINAL DRIVE, LIFTING TOOL	1
5	PAFZZ	5305-01-460-4756	80204	B1821BH075F300N	SCREW	6
6	XAFZZ		19207	12628442	ADAPTER, SPROCKET CARRIER, LIFTING TOOL	1
7	PAFZZ	5315-01-304-6934	80205	MS17987C832	PIN, QUICK RELEASE	4
8	PAFZZ	4010-00-878-2627	19207	11613002-3	WIRE ROPE ASSEMBLY, SINGLE LEG	4
9	PAFZZ	5310-01-462-4790	80205	NAS1149E0463R	WASHER, FLAT	3
10	PAFZZ	5305-00-267-8952	80204	B1821BH025F050N	SCREW	3
11	XAFZZ		19207	12628445	BASE,LIFTING TOOL	1
12	PAFZZ	5310-01-463-3147	80205	NAS1149E1290R	WASHER, FLAT	4
13	PAFZZ		19207	12652288	SCREW	6
14	PAFZZ	5315-01-466-9517	58536	AA55487-7	PIN, LOCK	2
15	PAFZZ	5315-01-628-9251	80205	MS20392-12P133	PIN, STRAIGHT, HEADED	2
					END OF FIGURE	

BEREGINI BEREGINI BEREGINI

MAINTAINER

TEST SET, FIRE SUPPRESSION (T1AAE) - 12496683

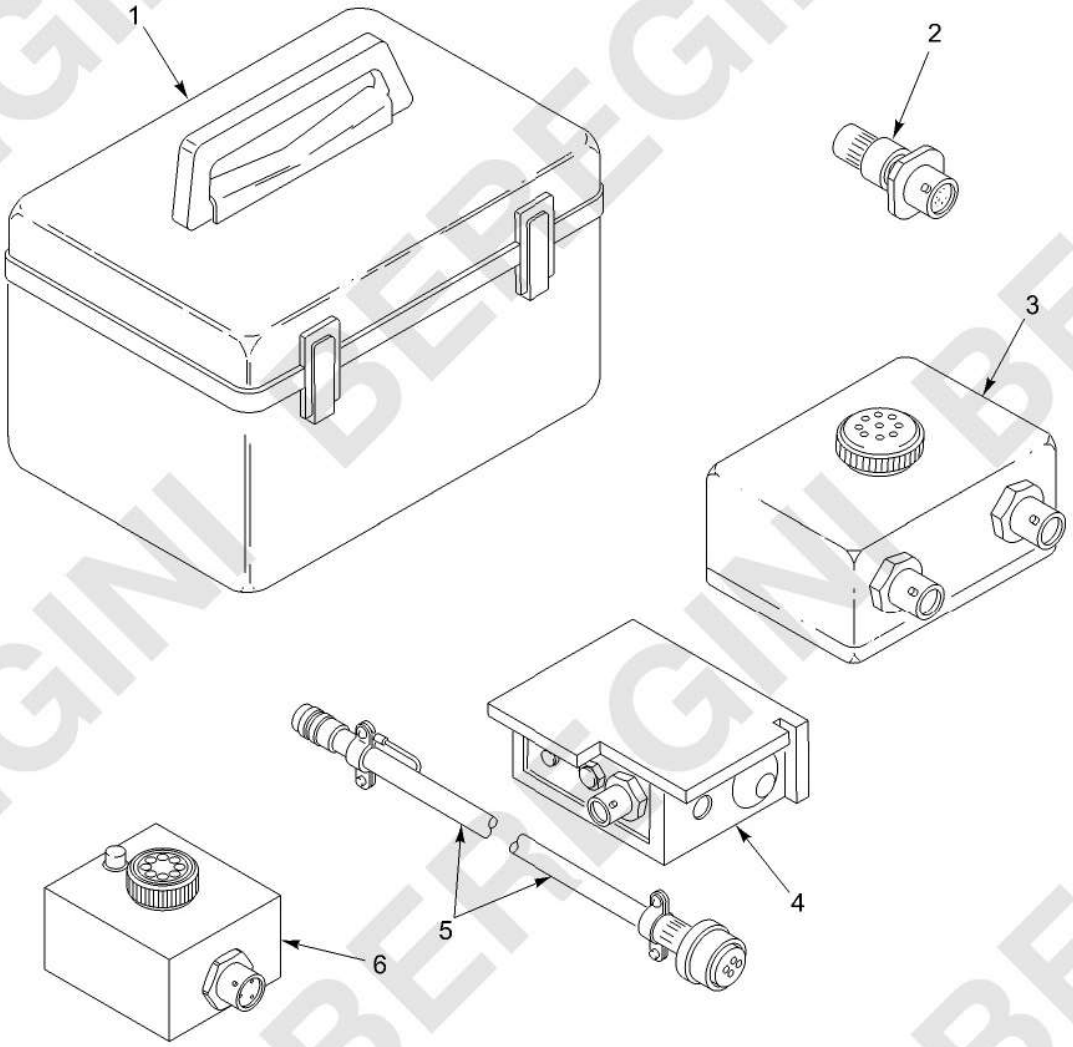

Figure 310. Test Set, Fire Suppression (T1AAE) - 12496683

(1) ITEM NO.	(2) SMR CODE	(3) NSN	(4) CAGEC	(5) PART NUMBER	(6) DESCRIPTION AND USABLE ON CODE (UOC)	(7) QTY
					GROUP T1AAE FIRE SUPPRESSION TEST SET	
					FIGURE 310 Test Set, Fire Suppression (T1AAE) - 12496683	
1	XAFZZ		11323	55098-98	CARRYING CASE	1
2	PAFZZ	5935-01-165-0485	11323	55098-95	DUMMY CONNECTOR,REC	1
3	PAFZZ	4931-01-165-0487	11323	55098-97	VALVE SIMULATOR	1
4	PAFZZ	4931-01-165-0486	11323	55098-96	SOURCE SIMULATOR	1
5	PAFZZ	6150-01-165-0532	11323	55098-99	CABLE ASSEMBLY,SPEC	1
6	PAFZZ	4931-01-439-3314	05BU0	53698-99	TEST SET,FIRE CONTR	1
					END OF FIGURE	

BEREGINI BEREGINI BEREGINI

MAINTAINER

TEST BOX, FUEL PUMP (T1AAF) - 12471160

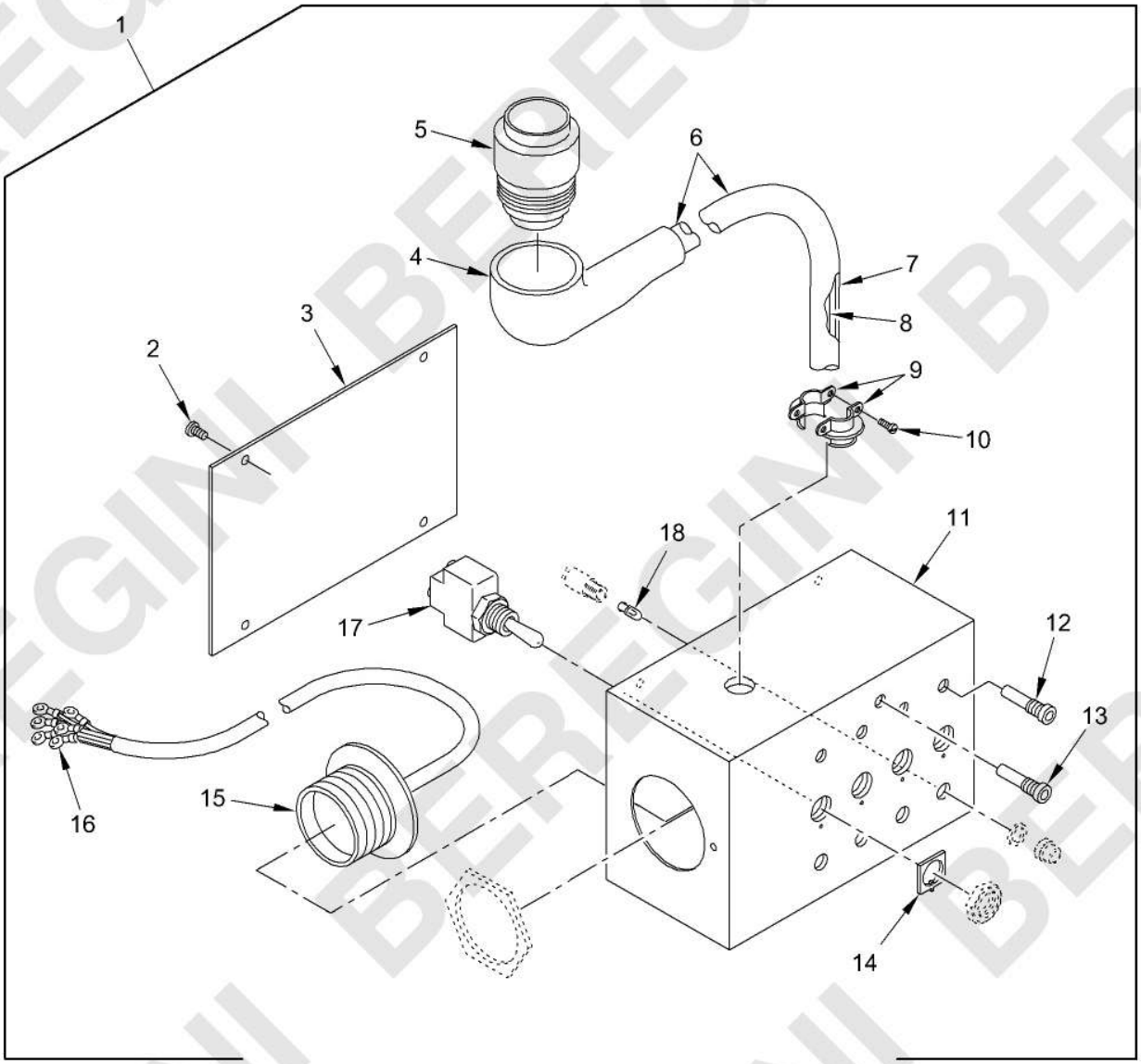

Figure 311. Test Box, Fuel Pump (T1AAF) - 12471160

(1) ITEM NO.	(2) SMR CODE	(3) NSN	(4) CAGEC	(5) PART NUMBER	(6) DESCRIPTION AND USABLE ON CODE (UOC)	(7) QTY
					GROUP T1AAF FUEL PUMP TEST BOX	
					FIGURE 311 Test Box, Fuel Pump (T1AAF) - 12471160	
1	PEFFF	4910-01-478-3594	19207	12471160	TEST BOX,FUEL PUMP	1
2	PAFZZ	5305-00-054-6668	96906	MS51957-43	.SCREW,MACHINE	4
3	XAFZZ		19207	12471160-2	.PLATE	1
4	XAFZZ		19207	12293287-34	.INSULATION SLEEVING	1
5	XAFZZ		96906	MS3456W28-21P	.CONNECTOR,PLUG,ELEC	1
6	XAFZZ		81349	M23053/5-110-0	.INSULATION SLEEVING	1
7	XAFZZ		81343	M22759/1-16-9	.WIRE,ELECTRICAL	1
8	XAFZZ		81343	M22759/1-20-9	.WIRE,ELECTRICAL	1
9	PAFZZ	5975-00-087-2726	56501	3303M	.BOX CONNECTOR,ELECT	1
10	PAFZZ	5305-00-660-2625	96906	MS35265-47	.SCREW,MACHINE	2
11	XAFZZ		19207	12471160-1	.BOX	1
12	XAFZZ		81349	M39024/10-13	.JACK,TIP	1
13	XAFZZ		81349	M39024/10-12	.JACK,TIP	1
14	PAFZZ	5975-01-034-5617	81640	30-5632-4	.PLATE,KEYWAY,ELECTR	4
15	XAFZZ		96906	MS3454W28-21S	.CONNECTOR,RECEPTACL	1
16	XAFZZ		96906	MS25036-106	.TERMINAL,LUG	12
17	PAFZZ	5930-00-683-1628	96906	MS24523-22	.SWITCH,TOGGLE	4
18	XAFZZ		19207	12334292	.LAMP,CARTRIDGE	4
					END OF FIGURE	

BEREGINI BEREGINI BEREGINI

MAINTAINER

INSTALLATION DEVICE (T1AAG) - 12293043-1

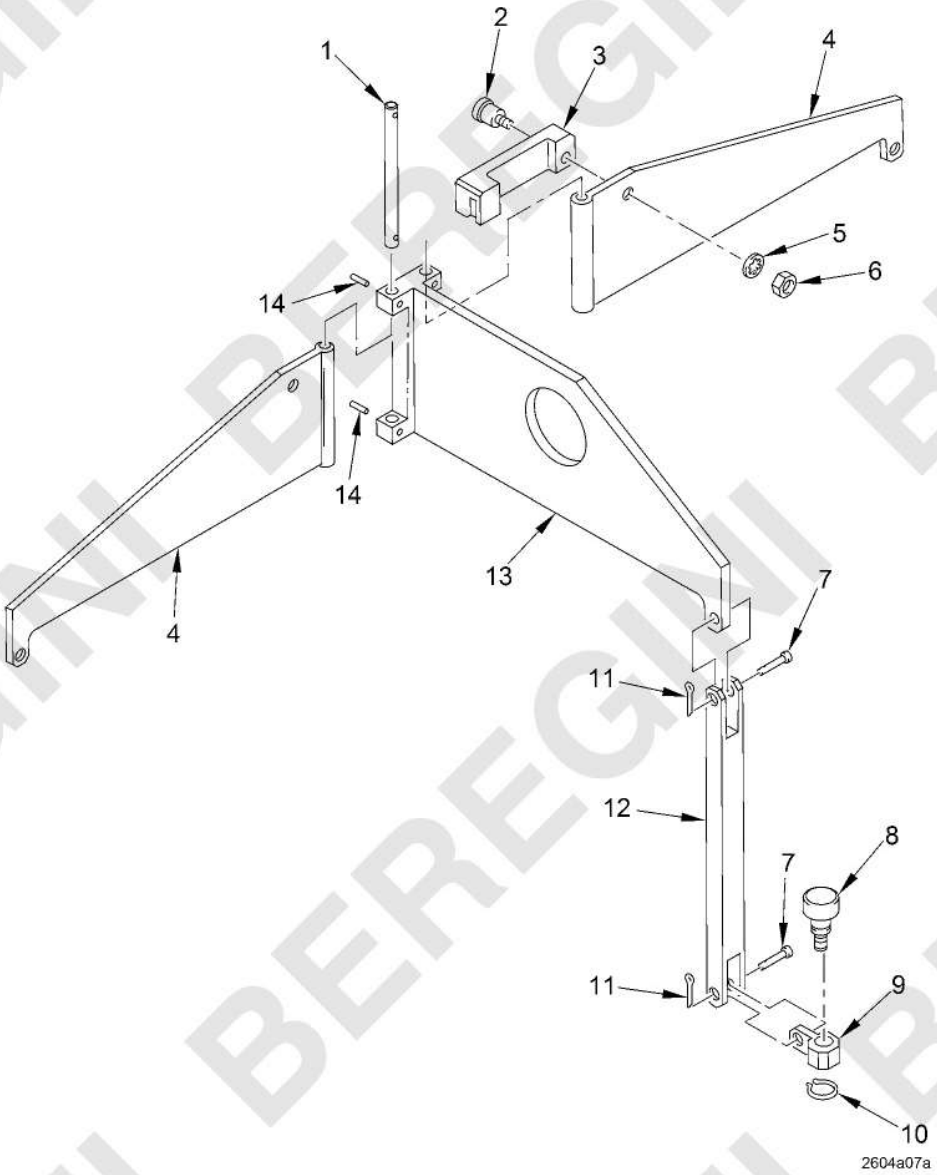

Figure 312. Installation Device (T1AAG) - 12293043-1

(1) ITEM NO.	(2) SMR CODE	(3) NSN	(4) CAGEC	(5) PART NUMBER	(6) DESCRIPTION AND USABLE ON CODE (UOC)	(7) QTY
					GROUP T1AAG INSTALLATION DEVICE	
					FIGURE 312 Installation Device (T1AAG) - 12293043-1	
1	PAFZZ	5315-01-190-6840	19207	12295727	PIN,STRAIGHT,HEADLE	2
2	PAFZZ	5305-01-198-1702	19207	12316962-1	SCREW,SHOULDER	1
3	PAFZZ	1005-01-188-3217	19207	12298140	LOCK,ARM,INSTALLATI	1
4	XAFZZ		19207	12295620	ARM,INSTALLATION	2
5	PAFZZ	5310-00-595-7237	80205	MS35333-42	WASHER,LOCK	1
6	PAFZZ	5310-00-056-3395	80205	MS35649-2382	NUT,PLAIN,HEXAGON	1
7	PAFZZ	5315-00-857-2480	96906	MS20392-3C21	PIN,STRAIGHT,HEADED	6
8	PAFZZ	5306-01-190-3165	19207	12295730	BOLT,SHOULDER	3
9	PAFZZ	1005-01-188-7879	19207	12295738	RETAINER,SCREW,INST	3
10	PAFZZ	5325-00-803-7301	96906	MS16624-1050	RING,RETAINING	3
11	PAFZZ	5315-00-839-2325	80205	MS24665-132	PIN,COTTER	6
12	PAFZZ	3040-01-481-0612	19207	12298139-1	CONNECTING LINK,RIG	3
13	PAFZZ	5340-01-266-6034	19207	12295619	BRACKET,MOUNTING	1
14	PAFZZ	5315-00-843-7986	80205	MS16562-33	PIN,SPRING	4
					END OF FIGURE	

0313-3/4 blank

BEREGINI BEREGINI BEREGINI

MAINTAINER

LEVEL SUPPORT (T1AAH) - 12313787

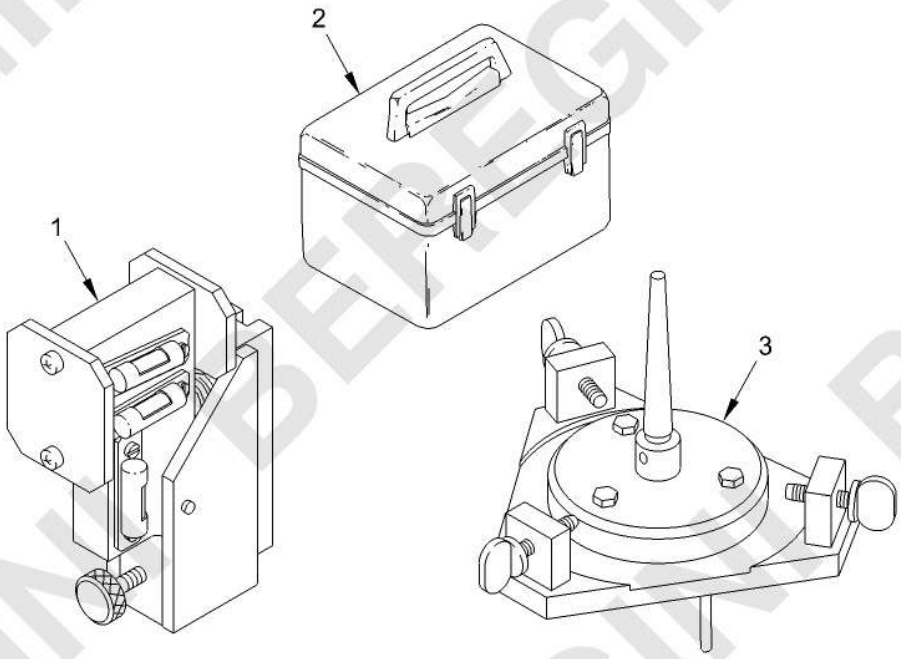

Figure 313. Level Support (T1AAH) - 12313787

(1) ITEM NO.	(2) SMR CODE	(3) NSN	(4) CAGEC	(5) PART NUMBER	(6) DESCRIPTION AND USABLE ON CODE (UOC)	(7) QTY
					GROUP T1AAH LEVEL SUPPORT	
					FIGURE 313 Level Support (T1AAH) - 12313787	
1	PAFFF	4931-01-116-3169	19207	12325632	LEVEL,TURRET DRIVE SEE FIG. 314 FOR BREAKDOWN.....	1
2	PAFZZ	5140-01-203-2781	19207	12313779	TOOL BOX,PORTABLE	1
3	PAFFF	4931-01-116-3170	19207	12325633	SUPPORT,LEVEL SEE FIG. 315 FOR BREAKDOWN.....	1
					END OF FIGURE	

BEREGINI BEREGINI BEREGINI

MAINTAINER

LEVEL TURRET DRIVE (T1AAHA) - 12325632

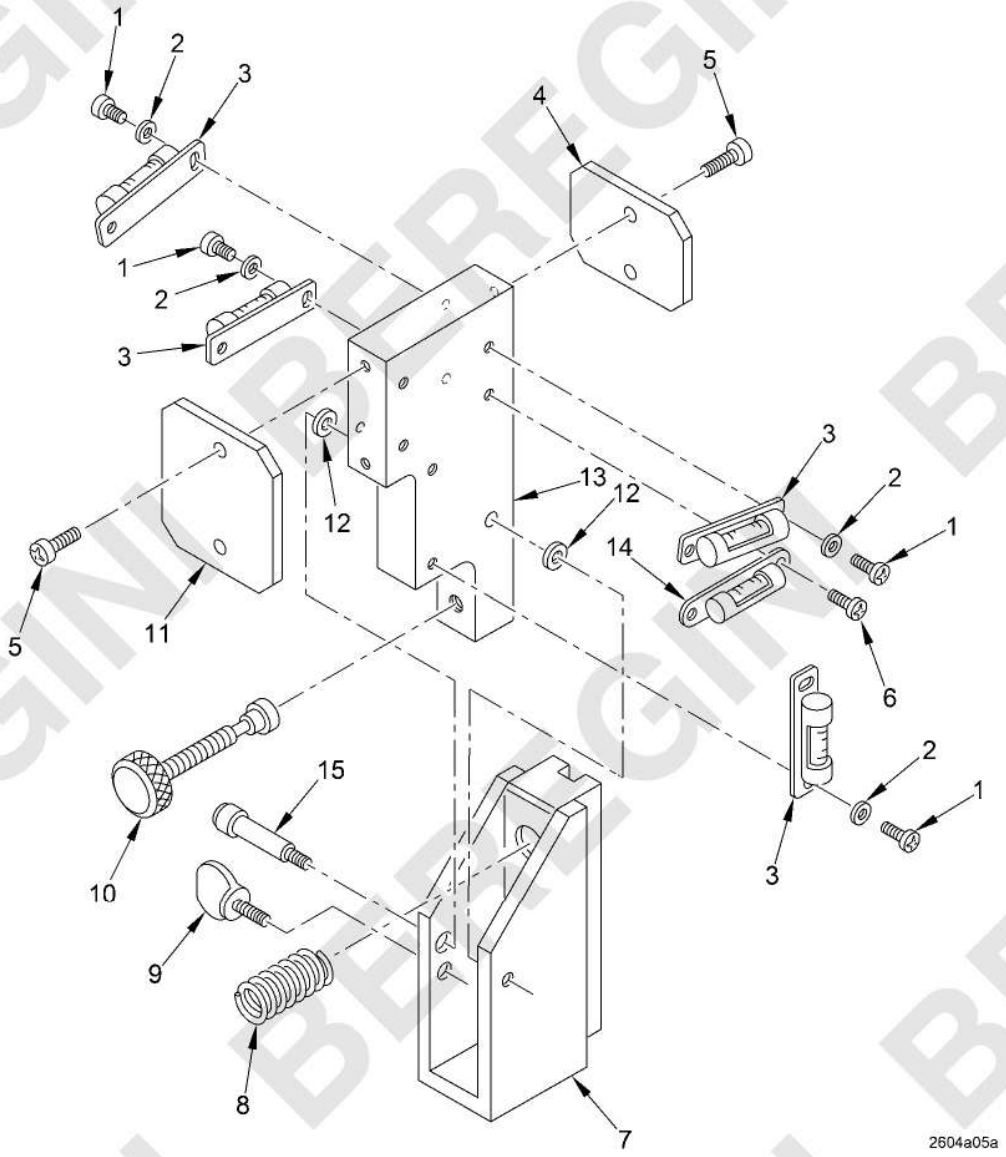

Figure 314. Level Turret Drive (T1AAHA) - 12325632

(1) ITEM NO.	(2) SMR CODE	(3) NSN	(4) CAGEC	(5) PART NUMBER	(6) DESCRIPTION AND USABLE ON CODE (UOC)	(7) QTY
					GROUP T1AAHA LEVEL TURRET DRIVE	
					FIGURE 314 Level Turret Drive (T1AAHA) - 12325632	
1	PAFZZ	5305-00-889-2998	80205	MS35206-216	SCREW,MACHINE	8
2	PAFZZ	5310-00-950-1310	96906	MS27183-4	WASHER,FLAT	8
3	PAFZZ	1005-01-191-8884	19207	12323401	LEVEL,PRECISION,VER	4
4	PAFZZ	5365-01-188-8041	19207	12325630-1	SPACER,PLATE	1
5	PAFZZ	5305-00-988-1724	96906	MS35206-280	SCREW,MACHINE	4
6	PAFZZ	5305-00-958-6230	96906	MS35190-224	SCREW,MACHINE	2
7	XAFZZ		19207	12325629	SUPPORT,BRACKET	1
8	PAFZZ	5360-01-192-6988	19207	12297984-6	SPRING,HELICAL,COMP	1
9	PAFZZ	5305-00-056-9384	96906	MS21316-33	THUMBSCREW	1
10	PAFZZ	5305-01-206-8110	18876	11436296-1	SCREW,SWIVEL HEAD	1
11	PAFZZ	5365-01-190-3394	19207	12325630-2	SPACER,PLATE	1
12	PAFZZ	5310-00-149-9130	80205	MS20002-6	WASHER,FLAT	2
13	XAFZZ		19207	12325624	LEVEL,BRACKET	1
14	PAFZZ	1005-01-191-8726	19207	12307162	LEVEL	1
15	PAFZZ	5305-00-942-5213	80205	MS51975-11	SCREW,SHOULDER	1
					END OF FIGURE	

BEREGINI BEREGINI BEREGINI

MAINTAINER

SUPPORT LEVEL (T1AAHB) - 12325633

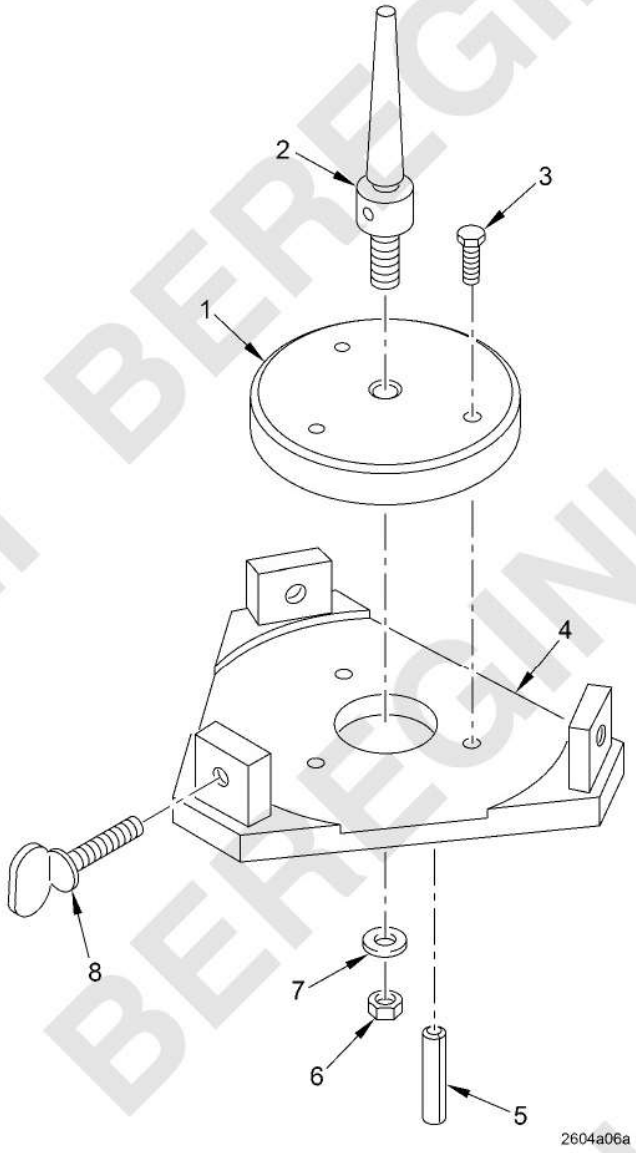

Figure 315. Support Level (T1AAHB) - 12325633

(1) ITEM NO.	(2) SMR CODE	(3) NSN	(4) CAGEC	(5) PART NUMBER	(6) DESCRIPTION AND USABLE ON CODE (UOC)	(7) QTY
					GROUP T1AAHB SUPPORT LEVEL	
					FIGURE 315 Support Level (T1AAHB) - 12325633	
1	XAFZZ		19207	12325634	PLATE,LEVEL SUPPORT	1
2	PAFZZ	3040-01-192-6781	19207	12325631	SHAFT,SHOULDERED	1
3	PAFZZ	5305-00-071-2505	80204	B1821BH025C088N	SCREW,CAP,HEXAGON H	3
4	XAFZZ		19207	12325635	PLATE,LEVEL SUPPORT	1
5	PAFZZ	5315-00-844-3665	80205	MS16562-68	PIN,SPRING	3
6	PAFZZ	5310-00-058-1626	80205	MS35650-3382	NUT,PLAIN,HEXAGON	1
7	PAFZZ	5310-00-877-5972	19200	10910174-3	WASHER,FLAT	1
8	PAFZZ	5305-00-900-8268	96906	MS21316-58	THUMBSCREW	3
					END OF FIGURE	

BEREGINI BEREGINI BEREGINI

MAINTAINER

GROUND HOP KIT (T1AAK) - 12298101

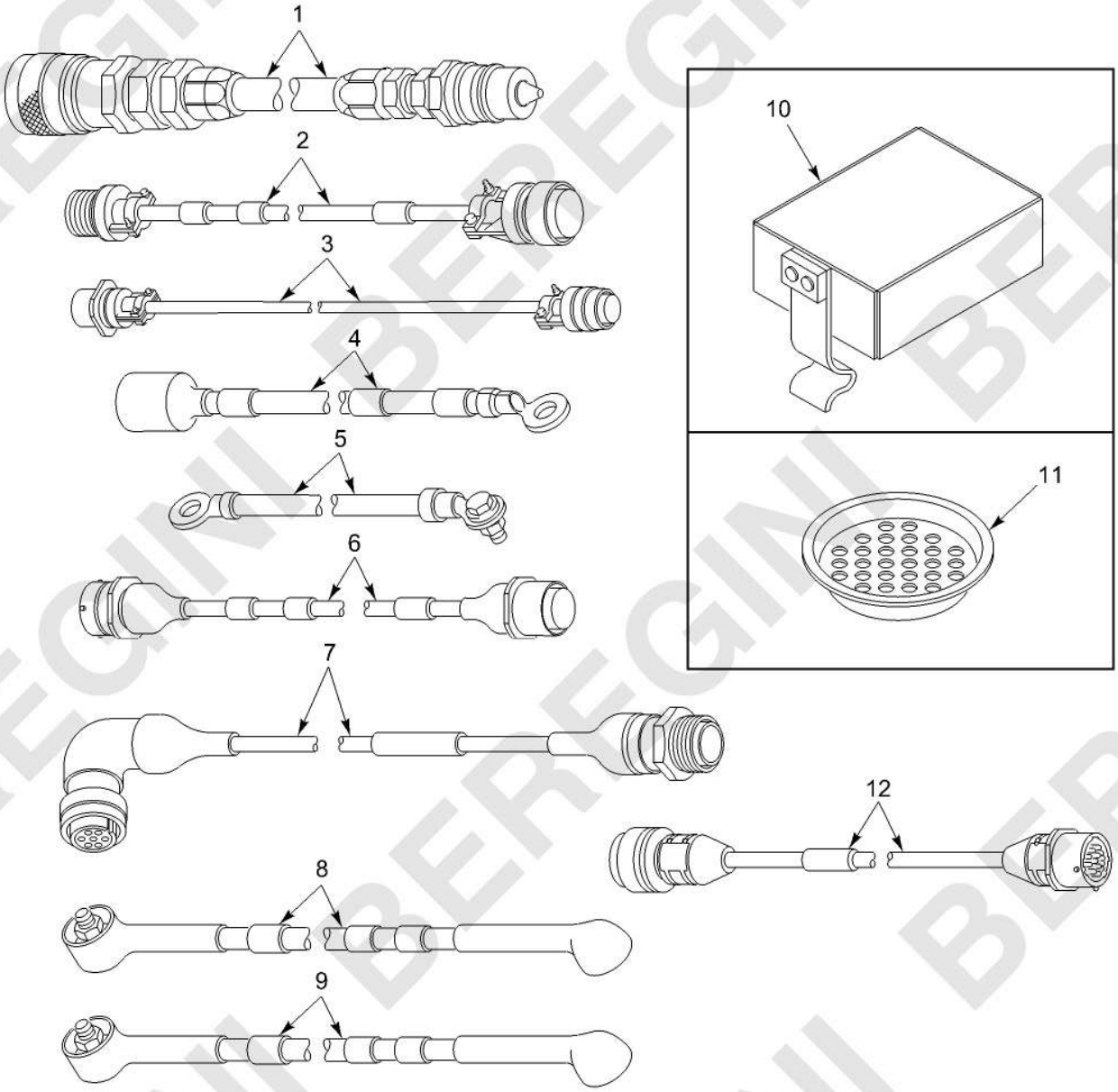

Figure 316. Ground Hop Kit (T1AAK) - 12298101

(1) ITEM NO.	(2) SMR CODE	(3) NSN	(4) CAGEC	(5) PART NUMBER	(6) DESCRIPTION AND USABLE ON CODE (UOC)	(7) QTY
					GROUP T1AAK GROUND HOP KIT	
					FIGURE 316 Ground Hop Kit (T1AAK) - 12298101	
1	PAFFF	4720-01-115-4990	19207	12298167	HOSE ASSEMBLY,NONME SEE FIG. 317 FOR BREAKDOWN.....	2
2	PAFZZ	6150-01-114-7613	19207	12298170	WIRING HARNESS 1W7 EXTENSION....	1
3	PAFZZ	6150-01-114-7612	19207	12298168	WIRING HARNESS 1W31 STE/ICE EXTENSION.....	1
4	PAFZZ	2590-01-114-7642	19207	12298169	LEAD,ELECTRICAL	1
5	PAFZZ	2590-01-114-7643	19207	12298171	LEAD,ELECTRICAL	1
6	PAFZZ	6150-01-314-5230	19207	12358987	WIRING HARNESS 1W7 EXTENSION....	1
7	PAFZZ	6150-01-355-6395	19207	12381627	CABLE ASSEMBLY,SPEC 3W61 EXTENSION.....	1
8	PAFZZ	6150-01-498-1141	19207	12484297-1	LEAD,ELECTRICAL	1
9	PAFZZ	6150-01-499-6017	19207	12484297-2	LEAD,ELECTRICAL	1
10	PAFZZ	4140-01-149-1300	19207	12308288	GUARD,FAN YOKE	1
11	PAFZZ	2835-01-149-1301	19207	12308310	SHIELD,HEAT,TURBINE	1
12	PAFZZ	6150-01-545-0086	19207	12488241	CABLE,EXT 1W123P3 1W123P3 (EXT)..	1
					END OF FIGURE	

BEREGINI BEREGINI BEREGINI

MAINTAINER

HOSE ASSEMBLY, NONMETALLIC (T1AAKA) - 12298167

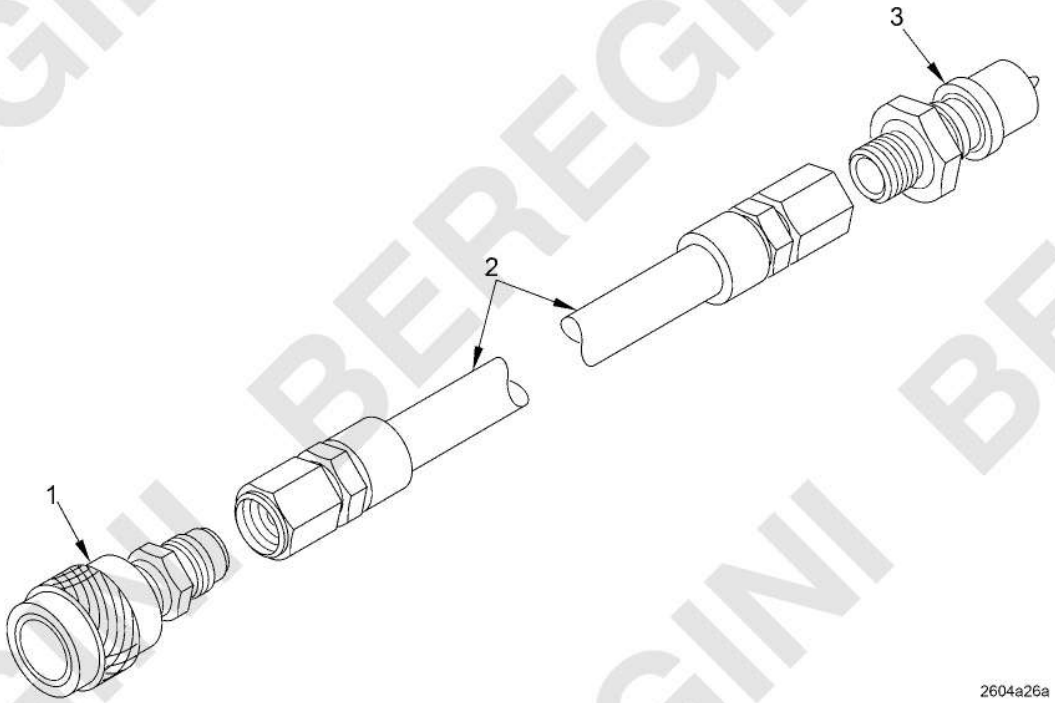

Figure 317. Hose Assembly, Nonmetallic (T1AAKA) - 12298167

(1) ITEM NO.	(2) SMR CODE	(3) NSN	(4) CAGEC	(5) PART NUMBER	(6) DESCRIPTION AND USABLE ON CODE (UOC)	(7) QTY
					GROUP T1AAKA HOSE ASSEMBLY, NONMETALLIC	
					FIGURE 317 Hose Assembly, Nonmetallic (T1AAKA) - 12298167	
1	PAFZZ	4730-01-149-4010	19207	12297003-1	COUPLING HALF,QUICK	1
2	XAFZZ		96906	MS52103Z121200R	HOSE ASSEMBLY,NONME	1
3	PAFZZ	4730-01-107-3372	19207	12297003	COUPLING HALF,QUICK	1
					END OF FIGURE	

BEREGINI BEREGINI BEREGINI

MAINTAINER

SLING AND WIRE ROPE ASSY SET (T1AAM) - 13024628

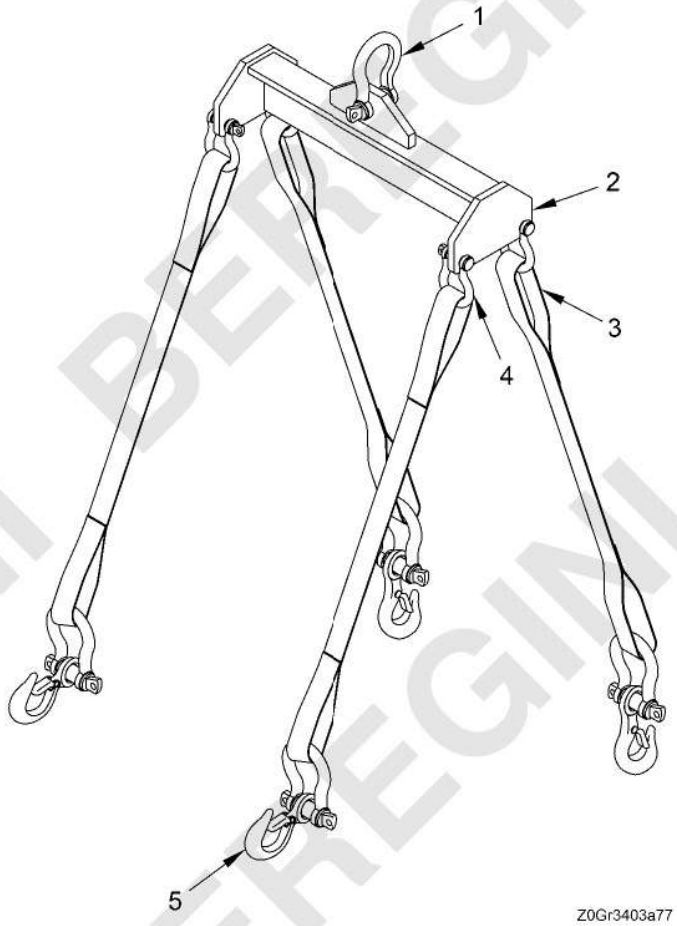

Figure 318. Sling and Wire Rope Assy Set (T1AAM) - 13024628

(1) ITEM NO.	(2) SMR CODE	(3) NSN	(4) CAGEC	(5) PART NUMBER	(6) DESCRIPTION AND USABLE ON CODE (UOC)	(7) QTY
					GROUP T1AAM SLING AND WIRE ROPE ASSY SET	
					FIGURE 318 Sling and Wire Rope Assy Set (T1AAM) - 13024628	
1	PAFZZ	4030-00-185-0489	81348	RR-C-271DTY4AGRACL2	SHACKLE	1
2	XAFZZ		19200	13024627	BAR,SPREADER	1
3	PAFZZ	3940-01-604-5037	19200	13024862	SLING,WEBBING,NYLON	4
4	PAFZZ	4030-00-702-8754	75535	1018393	SHACKLE	8
5	PAFZZ	5340-01-162-0430	60808	2311F	HOOK,SNAP	4
					END OF FIGURE	

BEREGINI BEREGINI BEREGINI

MAINTAINER

SUSTAINMENT MAINTENANCE TOOL SET (T1AB) - 12587953

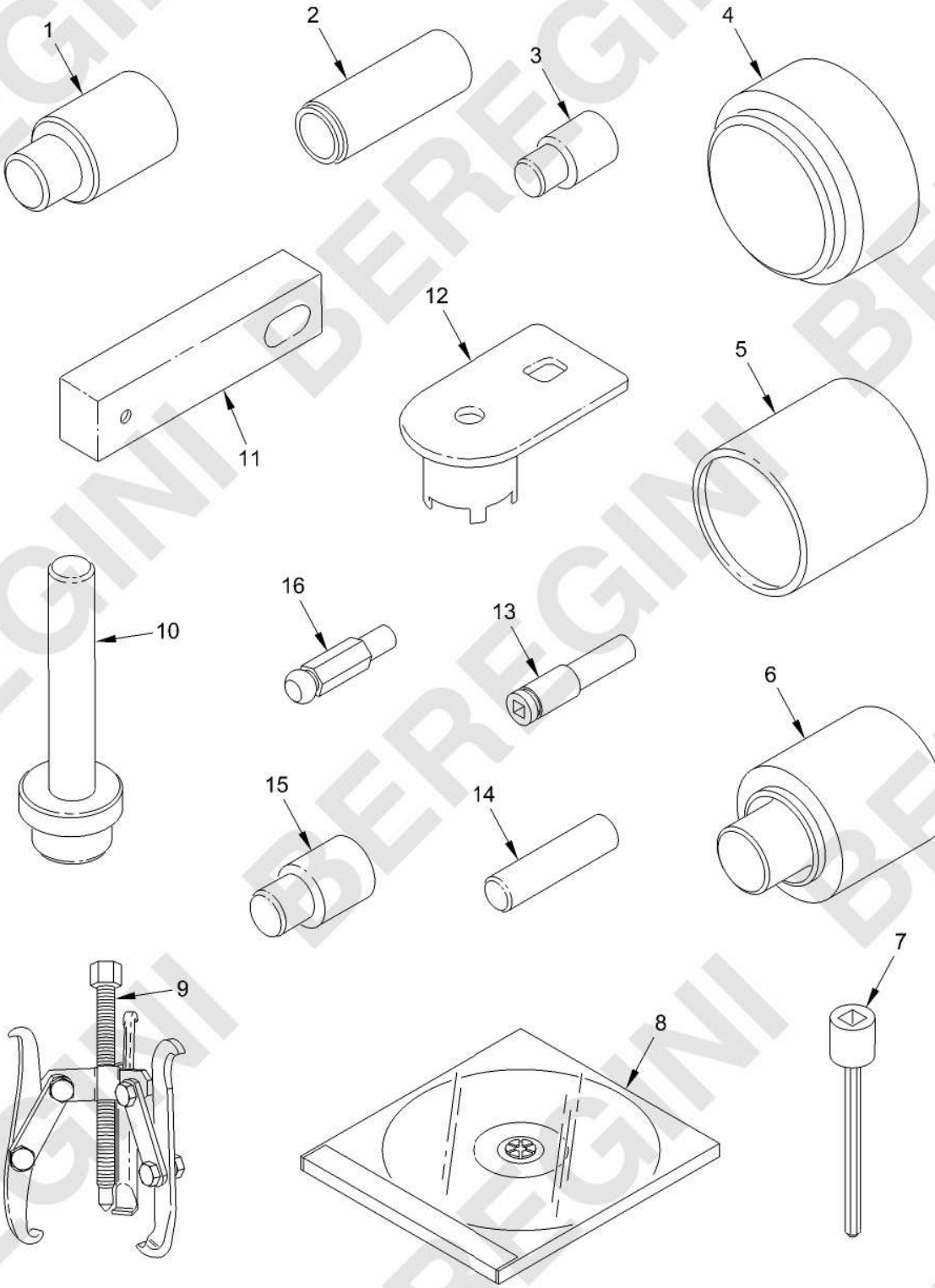

Figure 319. Sustainment Maintenance Tool Set (T1AB) - 12587953
(Sheet 1 of 6)

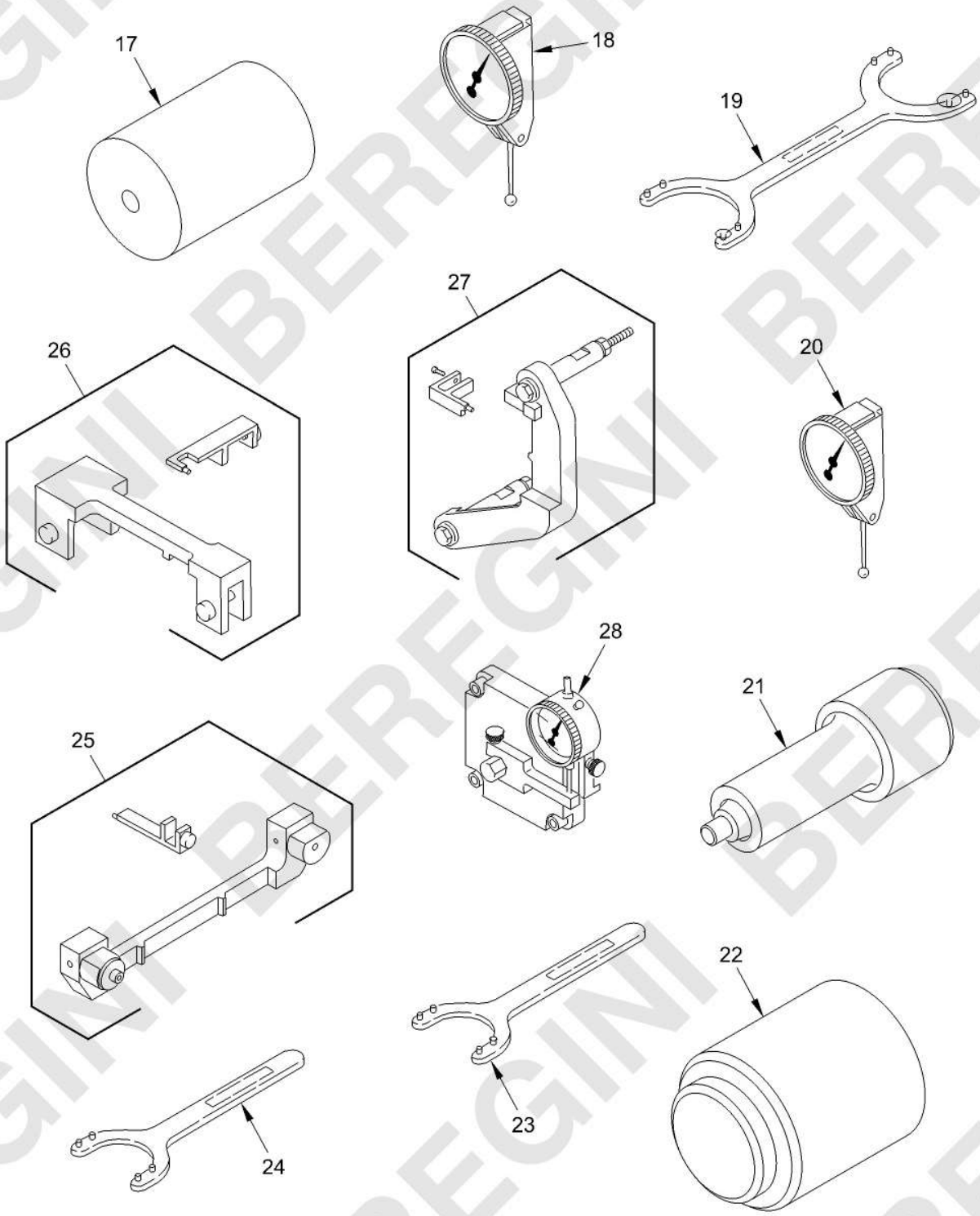

Figure 319. Sustainment Maintenance Tool Set (T1AB) - 12587953
(Sheet 2 of 6)

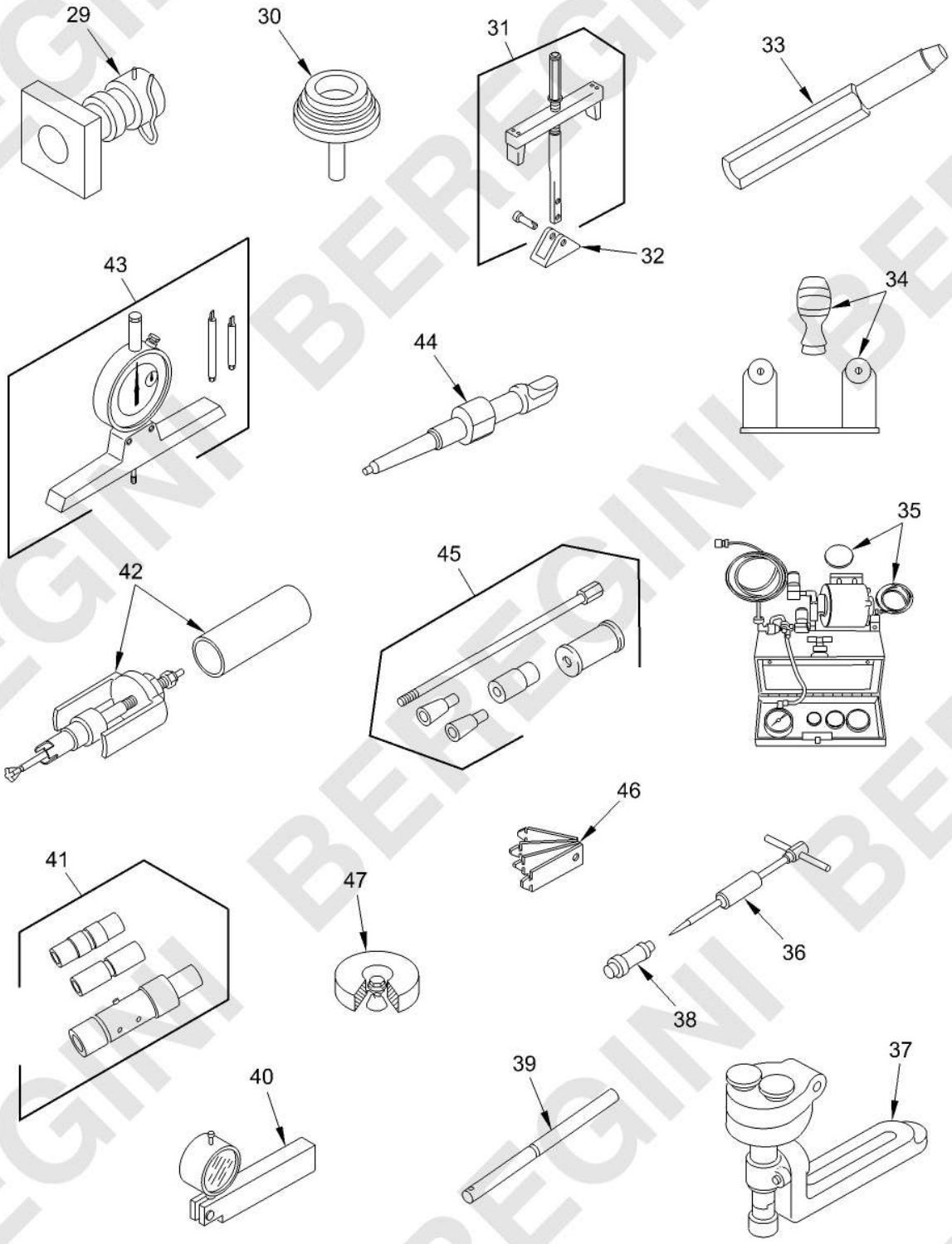

Figure 319. Sustainment Maintenance Tool Set (T1AB) - 12587953
(Sheet 3 of 6)

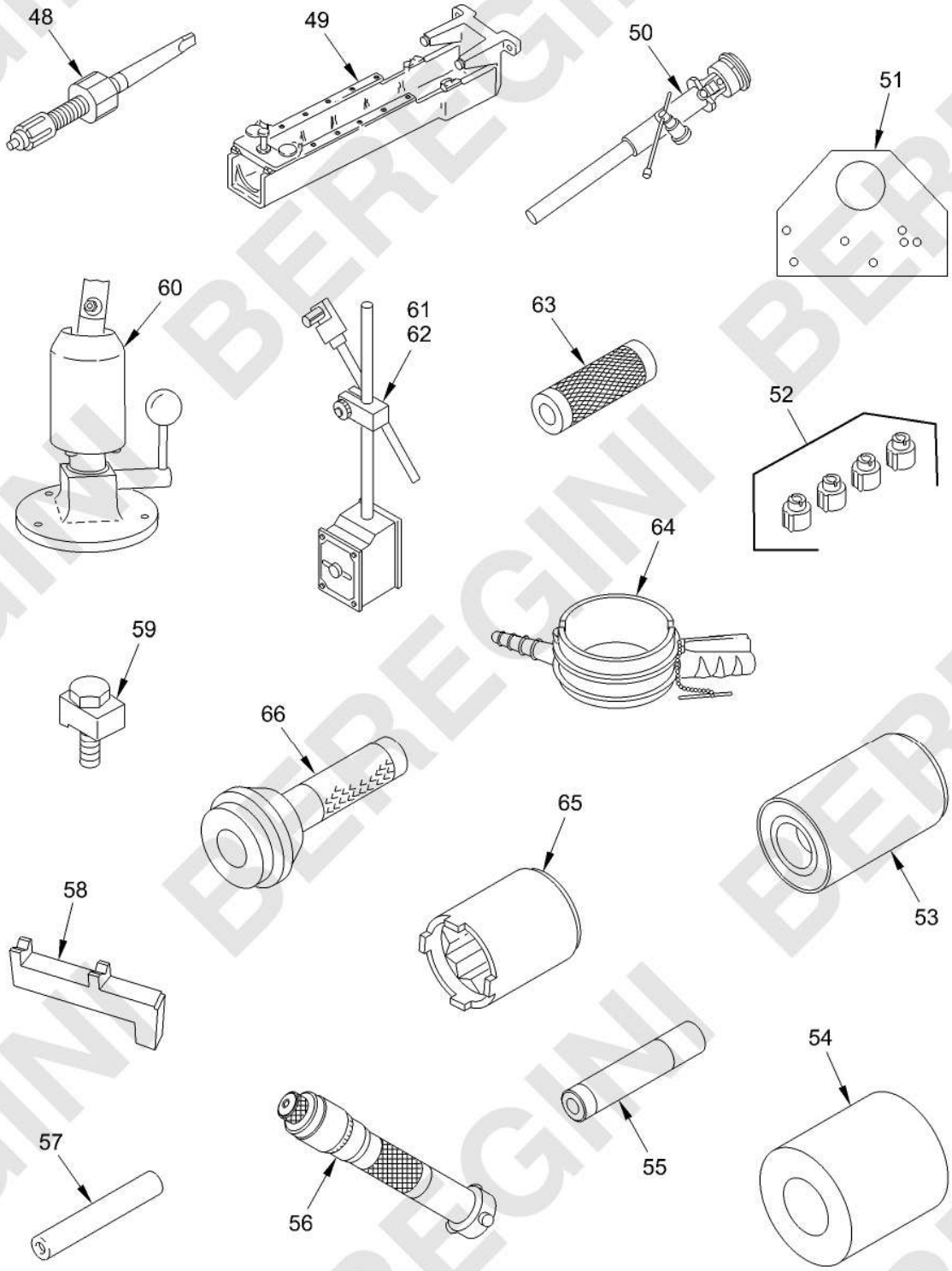

Figure 319. Sustainment Maintenance Tool Set (T1AB) - 12587953
(Sheet 4 of 6)

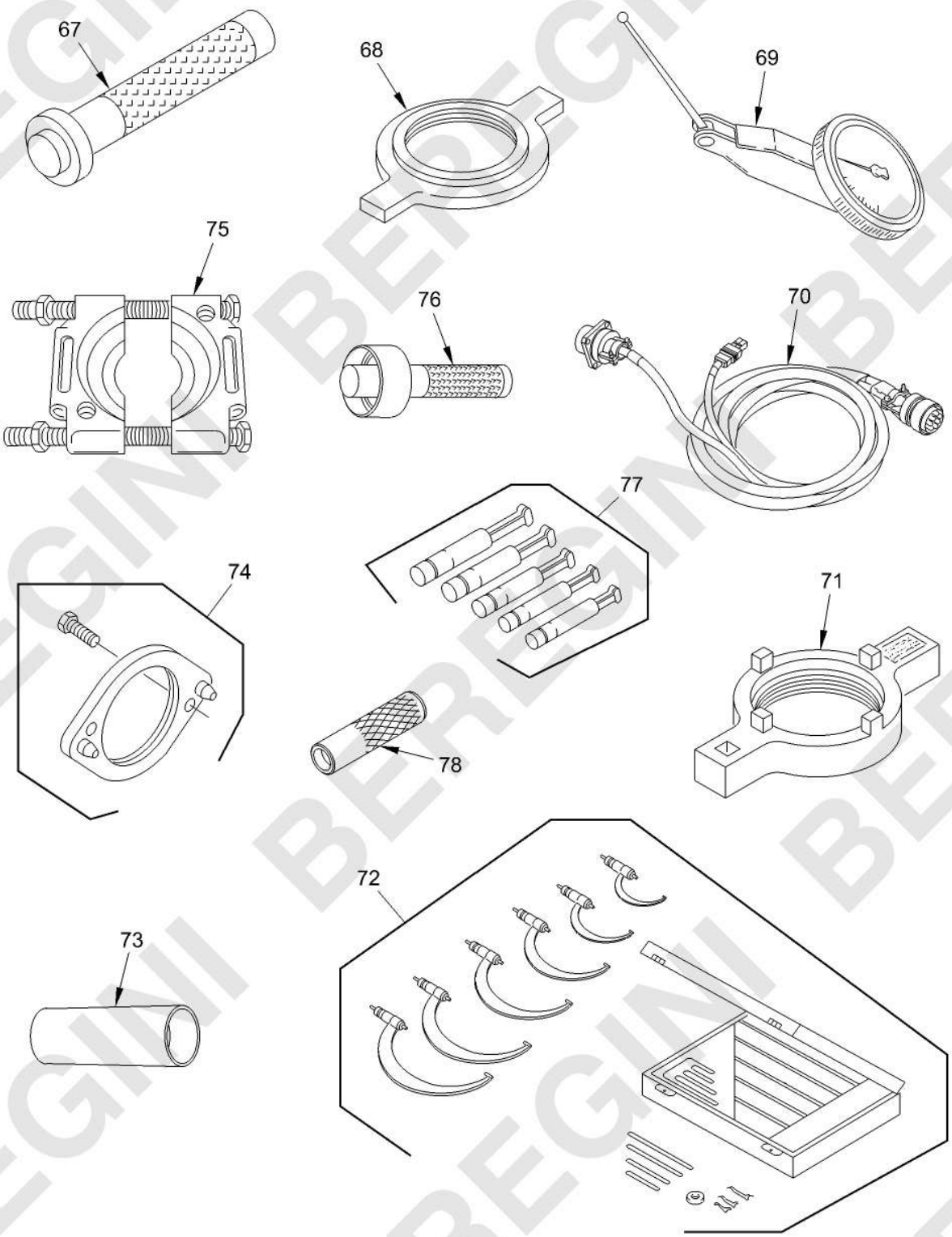

Figure 319. Sustainment Maintenance Tool Set (T1AB) - 12587953
(Sheet 5 of 6)

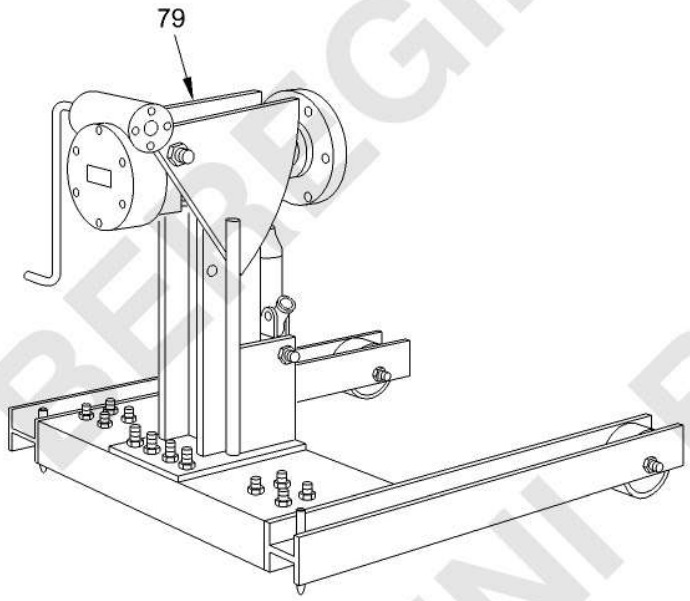

Figure 319. Sustainment Maintenance Tool Set (T1AB) - 12587953
(Sheet 6 of 6)

(1) ITEM NO.	(2) SMR CODE	(3) NSN	(4) CAGEC	(5) PART NUMBER	(6) DESCRIPTION AND USABLE ON CODE (UOC)	(7) QTY
					GROUP T1AB TOOL SETS	
					FIGURE 319 Sustainment Maintenance Tool Set (T1AB) - 12587953	
1	PAHZZ	5120-01-115-3140	19207	12292592-6	INSERTER,BEARING AN	1
1	PAHZZ	5120-01-115-3137	19207	12292592-3	INSERTER,BEARING AN	1
1	PAHZZ	5120-01-115-3141	19207	12292592-7	INSERTER,BEARING AN	1
1	PAHZZ	5120-01-115-3143	19207	12292592-9	INSERTER,BEARING AN	1
1	PAHZZ	5120-01-115-3142	19207	12292592-8	INSERTER,BEARING AN	1
1	PAHZZ	5120-01-115-3136	19207	12292592-2	INSERTER,BEARING AN	1
1	PAHZZ	5120-01-115-3132	19207	12292592-11	INSERTER,BEARING AN	1
1	PAHZZ	5120-01-115-3139	19207	12292592-5	INSERTER,BEARING AN	1
1	PAHZZ	5120-01-115-3134	19207	12292592-13	INSERTER,BEARING AN	1
1	PAHZZ	5120-01-115-3131	19207	12292592-12	INSERTER,BEARING AN	1
2	PAHZZ	5120-01-170-1925	19207	12292593-11	INSERTER,BEARING AN	1
2	PAHZZ	5120-01-177-4059	19207	12292593-12	INSERTER,BEARING AN	1
2	PAHZZ	5120-01-115-3095	19207	12292593-3	INSERTER,BEARING AN	1
2	PAHZZ	5120-01-115-3098	19200	12292593-8	INSERTER,BEARING AN	1
2	PAHZZ	5120-01-115-3093	19207	12292593-1	INSERTER,BEARING AN	1
2	PAHZZ	5120-01-115-3100	19207	12292593-10	INSERTER,BEARING AN	1
2	PAHZZ	5120-01-132-1387	19207	12292593-7	INSERTER,BEARING AN	1
2	PAHZZ	5120-01-115-3096	19207	12292593-4	INSERTER,BEARING AN	1
3	PAHZZ	5120-01-129-2433	19207	12292610-4	INSERTER,BEARING AN	1
3	PAHZZ	5120-01-128-1286	19207	12292610-1	INSERTER,BEARING AN	1
3	PAHZZ	5120-01-128-1287	19207	12292610-2	INSERTER,BEARING AN	1
3	PAHZZ	5120-01-128-1288	19207	12292610-3	INSERTER,BEARING AN	1
4	PAHZZ	5120-01-115-3113	19207	12292595-1	INSTALLING TOOL,LIP	1
4	PAHZZ	5120-01-115-3114	19207	12292595-2	INSTALLING TOOL,LIP	1
5	PAHZZ	5120-01-115-3107	19207	12292594-7	INSERTER,BEARING AN	1
5	PAHZZ	5120-01-115-3110	19207	12292594-10	INSERTER,BEARING AN	1
5	PAHZZ	5120-01-115-3101	19207	12292594-1	INSERTER,BEARING AN	1
5	PAHZZ	5120-01-115-3104	19207	12292594-4	INSERTER,BEARING AN	1
5	PAHZZ	5120-01-115-3106	19207	12292594-6	INSERTER,BEARING AN	1
5	PAHZZ	5120-01-177-4062	19207	12292594-15	INSERTER,BEARING AN	1
5	PAHZZ	5120-01-177-4061	19207	12292594-14	INSERTER,BEARING AN	1

(1) ITEM NO.	(2) SMR CODE	(3) NSN	(4) CAGEC	(5) PART NUMBER	(6) DESCRIPTION AND USABLE ON CODE (UOC)	(7) QTY
5	PAHZZ	5120-01-177-4060	19207	12292594-13	INSERTER,BEARING AN	1
5	PAHZZ	5120-01-115-3105	19207	12292594-5	INSERTER,BEARING AN	1
5	PAHZZ	5120-01-115-3111	19207	12292594-11	INSERTER,BEARING AN	1
5	PAHZZ	5120-01-115-3112	19207	12292594-12	INSERTER,BEARING AN	1
6	PAHZZ	4933-01-115-3119	19207	12292597	INSTALLING TOOL,SPH	1
7	PAHZZ	5120-01-206-0794	19200	9379283	SCREWDRIVER ATTACHM	1
8	XDHZZ		19207	12496441	CD ROM DVDB	1
9	PAHZZ	5120-01-477-6955	45225	1023	PULLER,MECHANICAL	1
10	PAHZZ	5120-01-148-8882	19207	12292554	INSERTER AND REMOVE	1
11	PAHZZ	3040-01-176-8800	19207	12292658	BRACKET,EYE,NONROTA	1
12	PAHZZ	5120-01-115-9810	19207	12292607	WRENCH,SPANNER	1
13	PAHZZ	5130-01-349-2668	03705	825	HOLDER,SCREWDRIVER	1
14	PAHZZ	4933-01-115-3120	19207	12292598	INSTALLING TOOL,BAL	1
15	PAHZZ	5120-01-129-2435	19200	12292611-4	INSTALLER,BEARING	1
15	PAHZZ	5120-01-129-2434	19207	12292611-1	INSTALLER,BEARING	1
15	PAHZZ	5120-01-129-2436	19207	12292611-5	INSTALLER,BEARING	1
16	PAHZZ	5130-01-577-6492	31734	11005	BIT,SCREWDRIVER	1
17	PAHZZ	5120-01-148-8883	19207	12292665	INSTALLATION TOOL,S	1
18	PAHZZ	5210-01-184-5003	19207	12292874-1	INDICATOR,DIAL	1
19	PAHZZ	5120-01-129-2537	19200	12292755	WRENCH,SPANNER	1
20	PAHZZ	5210-01-223-4690	19207	12292874-3	INDICATOR,DIAL	1
21	PAHZZ	5120-01-115-3135	19207	12292553	INSERTER,BEARING AN	1
22	PAHZZ	5120-01-115-3116	19207	12292429	INSTALLING TOOL,EXP	1
23	PAHZZ	5120-01-129-2536	19200	12292740	WRENCH,SPANNER	1
24	PAHZZ	5120-01-323-5183	19200	9379461	WRENCH,SPANNER	1
25	PEHHH	4933-01-115-3122	19207	12292621	FIXTURE,TRAVERSE TE SEE FIG. 321 FOR BREAKDOWN	1
26	PEHHH	4933-01-115-3123	19207	12292622	FIXTURE,GUN ELEVATI SEE FIG. 322 FOR BREAKDOWN	1
27	PEHHH	4933-01-128-1362	19207	12292623	FIXTURE,TOW DRIVE T SEE FIG. 323 FOR BREAKDOWN	1
28	PEHHH	4933-01-115-3121	19207	12292916	FIXTURE,MOTOR ADAPT SEE FIG. 324 FOR BREAKDOWN	1
29	PAHZZ	9999-01-128-2783	15434	ST-1243	DRIVER,BEARING AND	1
30	PAHZZ	5120-00-999-1206	80244	999-1206	DRIVER,CYLINDER LIN	1
31	PAHZZ	5120-01-138-7557	15434	3375629	PULLER,MECHANICAL	1

(1) ITEM NO.	(2) SMR CODE	(3) NSN	(4) CAGEC	(5) PART NUMBER	(6) DESCRIPTION AND USABLE ON CODE (UOC)	(7) QTY
32	PAHZZ	5120-01-128-2677	0B8S3	ST1202-1	PLATE,MECHANICAL PU	1
33	PAHZZ	5120-00-981-3108	0B8S3	ST1227	INSTALLER,SLEEVE	1
34	PAHZZ	6635-01-128-2676	15434	ST-1166	MAGNETIC INSPECTION	1
35	PAHZZ	4910-01-128-2691	15434	3824277	TESTER,VALVE VAC	1
36	PAHZZ	5120-01-187-3626	0B8S3	3376617	SLIDE HAMMER ASSEMB	1
37	PAHZZ	4910-00-345-3708	15434	ST-257	INSERT KIT,VALVE SE	1
38	PAHZZ	5120-01-187-3625	0B8S3	ST1279-1	EXTRACTOR,VALVE SEA	1
39	PAHZZ	3460-00-999-1173	15434	ST-663	ARBOR SET,VALVE GUI	1
40	PAHZZ	5210-01-187-3647	87641	6023A	GAGE,DEPTH,DIAL IND	1
41	PAHZZ	3460-00-999-1259	15434	ST-800	MANDREL,CRANK	1
42	PAHZZ	5120-00-113-5271	0B8S3	3377079	PULLER,MECHANICAL	1
43	PAHZZ	4910-00-238-9957	15434	ST537	GAGE,DEPTH	1
44	PAHZZ	4910-00-981-3105	15434	ST884	CUTTER,INJECTOR SLE	1
45	PAHZZ	4910-00-150-5848	15434	3163720	EXTRACTOR,VALVE PIN	1
46	PAHZZ	5210-00-999-1209	0B8S3	ST560	GAGE,PISTON RING GR	1
47	PAHZZ	5120-00-104-1795	0B8S3	ST1179	HOLDING TOOL,INJECT	1
48	PAHZZ	3441-00-922-6699	15434	ST880	EXPANDER,TUBE	1
49	PAHZZ	4910-00-977-7507	15434	ST561	FIXTURE ASSEMBLY,CH	1
50	PAHZZ	5210-00-351-9700	00988	X825	INDICATOR,DIAL	1
51	PAHZZ	4910-00-977-7489	15434	ST862	FIXTURE,LIFTING HEA	1
52	PAHZZ	4910-00-999-1208	15434	ST662	CUTTER SET,COUNTERB	1
53	PAHZZ	4910-01-097-6986	15434	ST-658	MANDREL WATER PUMP	1
54	PAHZZ	5120-01-128-2782	0B8S3	3375318	INSERTER,BEARING AN	1
55	PAHZZ	5365-01-128-2684	15434	3375092	INSERTER AND REMOVE	1
56	PAHZZ	4910-01-149-1303	15434	3376255	DRIVER,VALVE GUIDE	1
57	PAHZZ	4910-01-128-2689	15434	3823798	VALVE HEAD CHECK TO	1
58	PAHZZ	5120-01-262-7309	0B8S3	3822503	CLAMP SET,CYLINDER	1
59	PAHZZ	4910-00-999-1506	15434	ST302	VISE,BALL JOINT	1
60	PAHZZ	5210-00-869-0466	09058	599-7746	HOLDER,DIAL INDICAT	1
61	PAHZZ	5210-00-484-5274	09058	599-281-8	CALIPER,MICROMETER	1
62	PAHZZ	5210-00-567-9545	09058	599-281-20	CALIPER,MICROMETER	1
63	PAHZZ	5120-00-941-3824	0B8S3	ST874	INSERTER,SEAL	1
64	PAHZZ	5120-01-128-2758	15434	3375162	COMPRESSOR,PISTON R	1
65	PAHZZ	5120-01-149-1391	19207	12298102-1	SPANNER ATTACHMENT	1

(1) ITEM NO.	(2) SMR CODE	(3) NSN	(4) CAGEC	(5) PART NUMBER	(6) DESCRIPTION AND USABLE ON CODE (UOC)	(7) QTY
66	PAHZZ	5120-01-128-2671	0B8S3	ST0116100	INSERTER,SEAL	1
67	PAHZZ	5120-01-187-0384	0B8S3	3377269	INSERTER,SEAL	1
68	PAHZZ	5120-01-120-3027	19207	12298109	PULLER,MECHANICAL	1
69	PAHZZ	5210-00-459-8871	21938	4306960	INDICATOR,DIAL	1
70	PAHZZ	6150-01-542-4876	19207	12488230	CABLE ASSEMBLY,SPEC	1
71	PAHZZ	5120-01-221-3986	19207	12328816	WRENCH,SPANNER	1
72	PAHZZ	5210-00-221-1934	57163	T436XRL-4	CALIPER,MICROMETER	1
73	PAHZZ	5120-01-217-8264	K4843	3823815	INSERTER,SEAL	1
74	PAHZZ	2530-01-114-7393	19207	12307576	SUPPORT,AXLE,VEHICU	1
75	PAHZZ	5120-01-128-2674	0B8S3	3375326	PULLER ATTACHMENT	1
76	PAHZZ	4910-01-097-6988	15434	ST-1159	MANDREL,SEAL,SLEEVE	1
77	PAHZZ	5210-00-449-7014	09058	599-596	GAGE SET,SMALL HOLE	1
78	PAHZZ	5120-01-534-1728	0B8S3	3163937	INSERTER AND REMOVE	1
79	PEHHH	4910-01-535-5999	33559	SP-06321	STAND,MAINT,KIT SEE FIG. 320 FOR BREAKDOWN	1
					END OF FIGURE	

BEREGINI BEREGINI BEREGINI

MAINTAINER

STAND, MAINT, KIT (T1ABD) - SP-06321

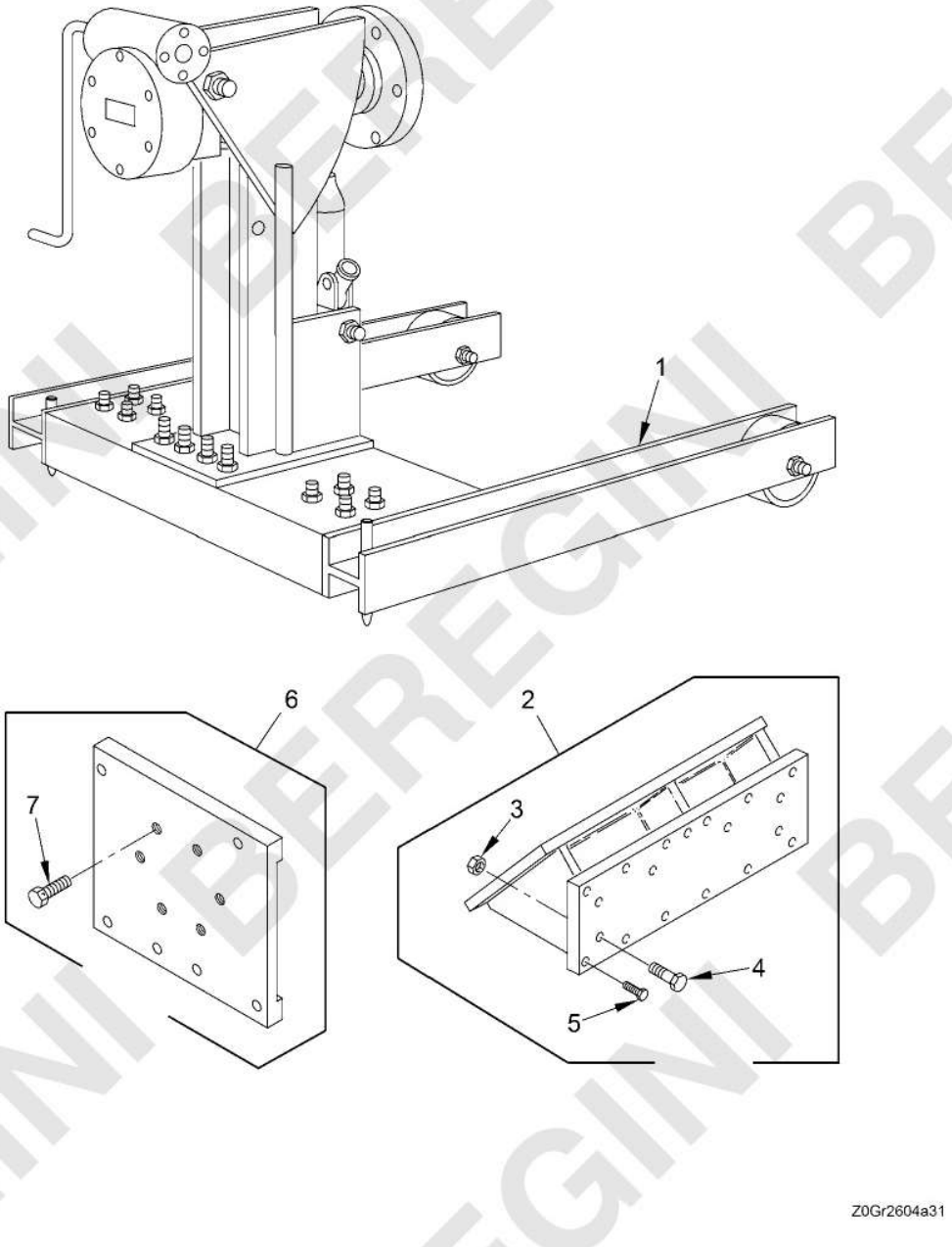

Figure 320. Stand, Maint, Kit (T1ABD) - SP-06321

(1) ITEM NO.	(2) SMR CODE	(3) NSN	(4) CAGEC	(5) PART NUMBER	(6) DESCRIPTION AND USABLE ON CODE (UOC)	(7) QTY
					GROUP T1ABD MAINTENANCE STAND KIT	
					FIGURE 320 Stand, Maint, Kit (T1ABD) - SP-06321	
1	XAHZZ		33559	M900	STAND,MAINTENANCE,A	1
2	PAHZZ	5340-01-525-8093	33559	G959	BRACKET,MOUNTING	1
3	PAHZZ	5310-00-768-0318	96906	MS51967-14	.NUT,PLAIN,HEXAGON	6
4	PAHZZ	5305-00-071-2077	05047	AES01C500C50AW9A91	.SCREW,CAP,HEXAGON H	6
5	PAHZZ	5305-00-725-2317	05047	AES01C375A50AW9A91	.SCREW,CAP,HEXAGON H	12
6	PAHZZ	4910-01-536-2369	33559	G903	ADAPTER,TRANSMISSIO	1
7	PAHZZ	5305-00-724-7228	05047	AES01C625C00AW9A91	.SCREW,CAP,HEXAGON H	12
					END OF FIGURE	

BEREGINI BEREGINI BEREGINI

MAINTAINER

FIXTURE, TRAVERSE (T1ABE) - 12292621

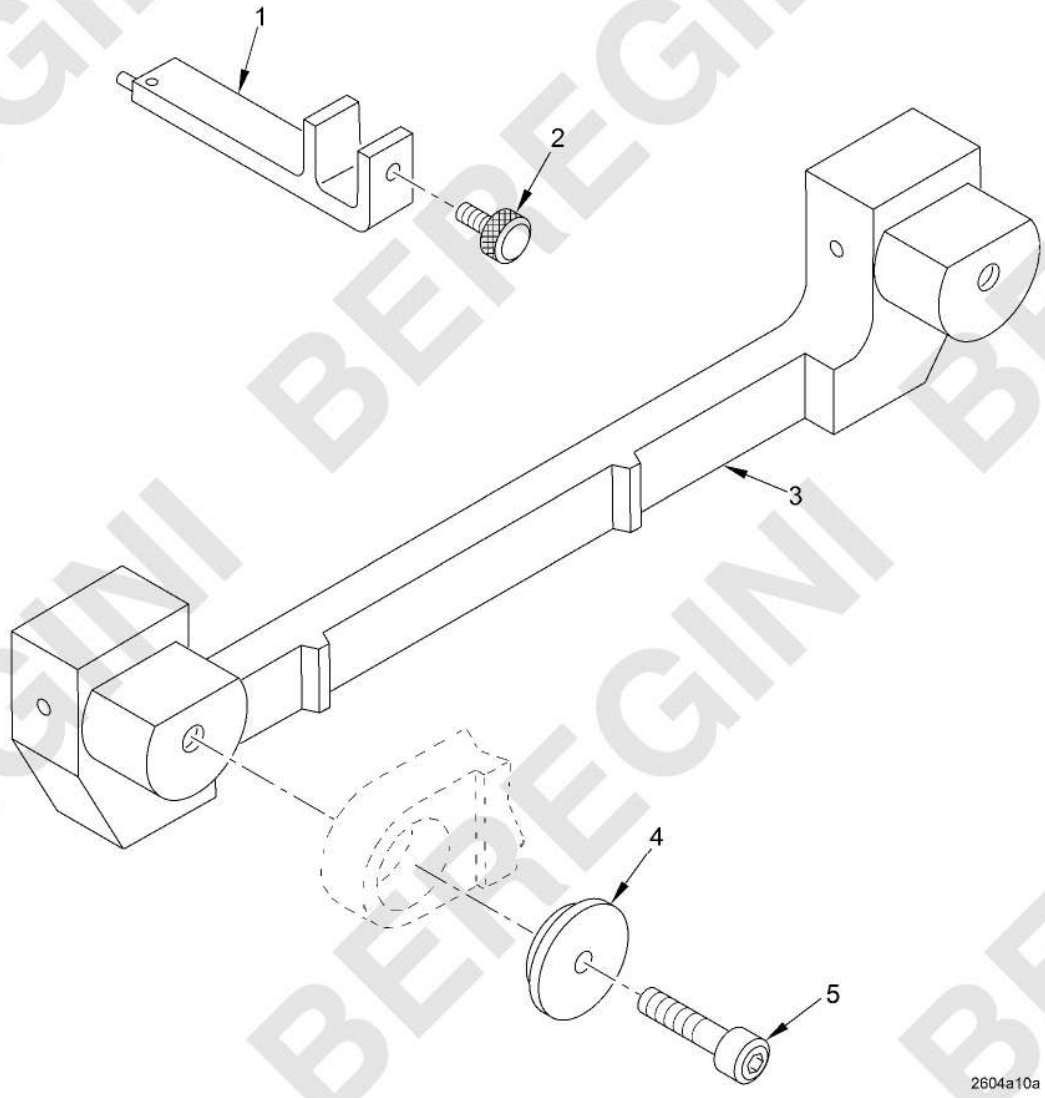

Figure 321. Fixture, Traverse (T1ABE) - 12292621

(1) ITEM NO.	(2) SMR CODE	(3) NSN	(4) CAGEC	(5) PART NUMBER	(6) DESCRIPTION AND USABLE ON CODE (UOC)	(7) QTY
					GROUP T1ABE TRAVERSE FIXTURE	
					FIGURE 321 Fixture, Traverse (T1ABE) - 12292621	
1	PAHZZ	1005-01-190-8547	19207	12292647	SUPPORT ASSEMBLY,FI	1
2	PAHZZ	5305-01-190-6655	19207	12292635	THUMBSCREW	1
3	PAHZZ	1005-01-188-7860	19207	12292663	BAR ASSEMBLY,ALIGNM	1
4	PAHZZ	5310-01-188-7626	19207	12292587	WASHER,SHOULDERED	2
5	PAHZZ	5305-00-988-7846	96906	MS16995-83	SCREW,CAP,SOCKET HE	2
					END OF FIGURE	

BEREGINI BEREGINI BEREGINI

MAINTAINER

FIXTURE, GUN ELEVATION (T1ABF) - 12292622

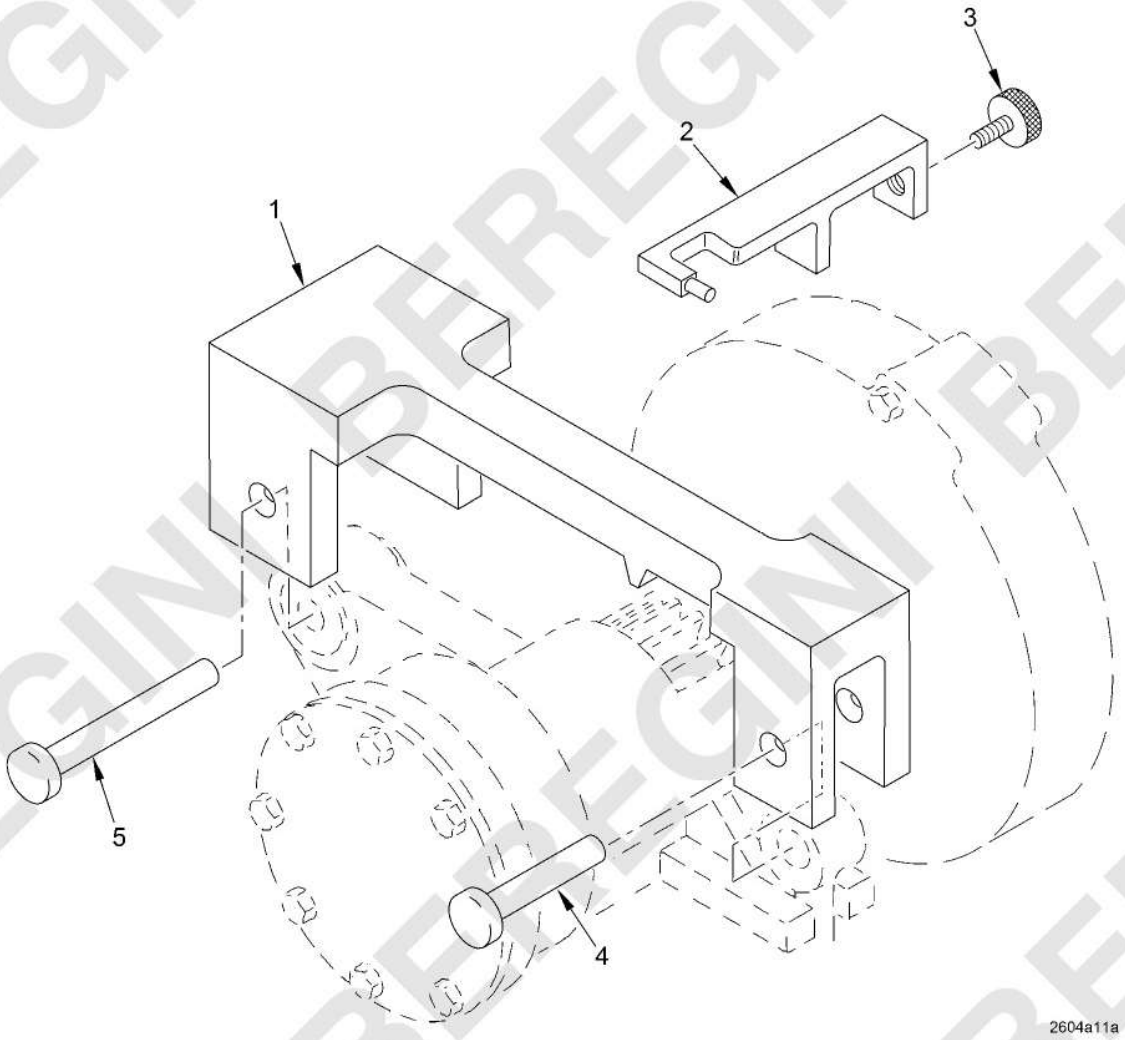

Figure 322. Fixture, Gun Elevation (T1ABF) - 12292622

(1) ITEM NO.	(2) SMR CODE	(3) NSN	(4) CAGEC	(5) PART NUMBER	(6) DESCRIPTION AND USABLE ON CODE (UOC)	(7) QTY
					GROUP T1ABF GUN ELEVATION FIXTURE	
					FIGURE 322 Fixture, Gun Elevation (T1ABF) - 12292622	
1	PAHZZ	1005-01-190-6857	19207	12292632	BAR,FIXTURE	1
2	PAHZZ	1005-01-190-3313	19207	12292643	SUPPORT,ELEVATING A	1
3	PAHZZ	5305-01-190-6655	19207	12292635	THUMBSCREW	1
4	PAHZZ	5315-01-188-3201	19207	12292631	PIN,STRAIGHT,HEADED	1
5	PAHZZ	5315-01-188-3200	19207	12292630	PIN,STRAIGHT,HEADED	1
					END OF FIGURE	

BEREGINI BEREGINI BEREGINI

MAINTAINER

FIXTURE, TOW DRIVE (T1ABG) - 12292623

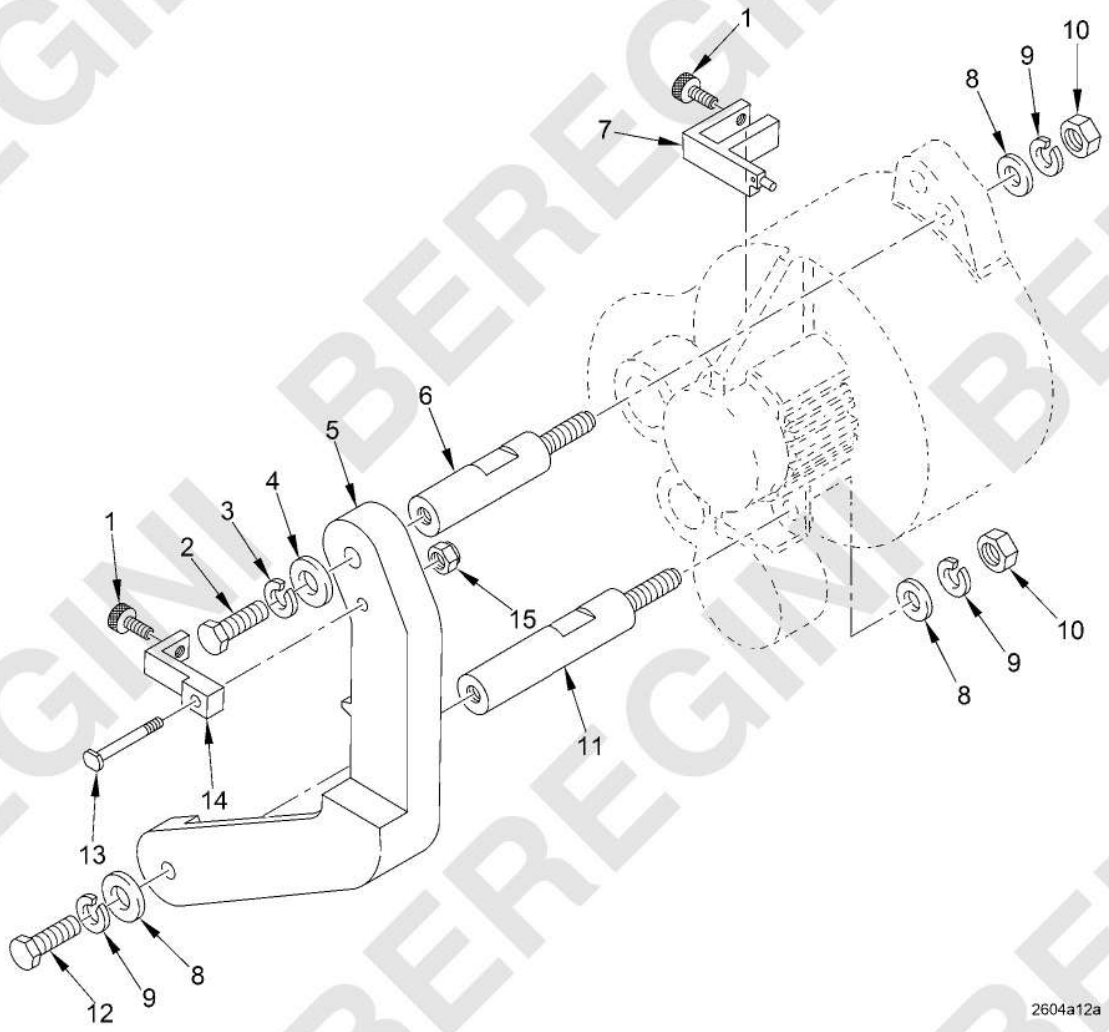

Figure 323. Fixture, Tow Drive (T1ABG) - 12292623

(1) ITEM NO.	(2) SMR CODE	(3) NSN	(4) CAGEC	(5) PART NUMBER	(6) DESCRIPTION AND USABLE ON CODE (UOC)	(7) QTY
					GROUP T1ABG TOW DRIVE FIXTURE	
					FIGURE 323 Fixture, Tow Drive (T1ABG) - 12292623	
1	PAHZZ	5305-01-190-6655	19207	12292635	THUMBSCREW	2
2	PAHZZ	5305-00-531-1097	96906	MS35308-365	SCREW,CAP,HEXAGON H	1
3	PAHZZ	5310-00-984-7042	80205	MS35338-141	WASHER,LOCK	1
4	PAHZZ	5310-00-595-6057	80205	MS15795-815	WASHER,FLAT	1
5	PAHZZ	1005-01-188-7858	19207	12292633	BAR,LOCKING	1
6	PAHZZ	3040-01-190-8541	19207	12292634	SHAFT,SHOULDERED	1
7	PAHZZ	1005-01-188-3215	19207	12292644	SUPPORT ASSEMBLY,GU	1
8	PAHZZ	5310-00-767-9425	80205	MS15795-818	WASHER,FLAT	3
9	PAHZZ	5310-00-933-8778	80205	MS35338-143	WASHER,LOCK	3
10	PAHZZ	5310-00-924-8210	96906	MS51972-5	NUT,PLAIN,HEXAGON	2
11	PAHZZ	5315-01-187-9614	19207	12292636	PIN,SHOULDER,HEADLE	1
12	PAHZZ	5305-00-939-0798	96906	MS35308-414	SCREW,CAP,HEXAGON H	1
13	PAHZZ	5306-01-192-9193	19207	12292639	BOLT,MACHINE	1
14	PAHZZ	1005-01-190-3314	19207	12292638	SUPPORT,SEAT	1
15	PAHZZ	5310-00-976-1321	10001	2110563P3	NUT,SELF-LOCKING,HE	1
					END OF FIGURE	

BEREGINI BEREGINI BEREGINI

MAINTAINER

FIXTURE, MOTOR ADAPTER (T1ABH) - 12292916

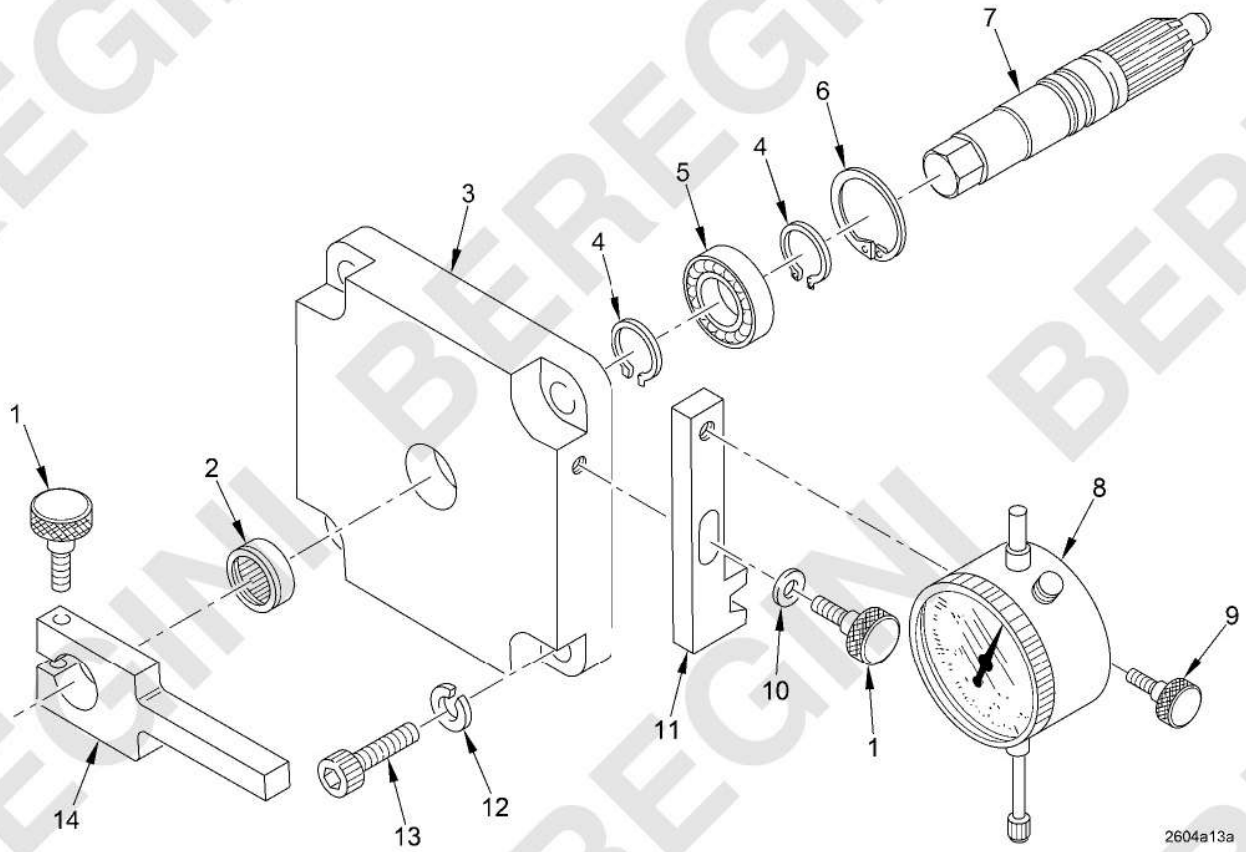

Figure 324. Fixture, Motor Adapter (T1ABH) - 12292916

(1) ITEM NO.	(2) SMR CODE	(3) NSN	(4) CAGEC	(5) PART NUMBER	(6) DESCRIPTION AND USABLE ON CODE (UOC)	(7) QTY
					GROUP T1ABH MOTOR ADAPTER FIXTURE	
					FIGURE 324 Fixture, Motor Adapter (T1ABH) - 12292916	
1	PAHZZ	5305-01-196-8194	19207	12292660	THUMBSCREW	2
2	PAHZZ	3110-00-198-1085	96906	MS17131-18	BEARING,ROLLER,NEED	1
3	PAHZZ	1005-01-189-4664	19207	12292649	HOUSING,SHAFT	1
4	PAHZZ	5325-00-753-3699	96906	MS16624-4062	RING,RETAINING	2
5	PAHZZ	3110-01-189-7565	19207	12292905-6	BEARING,BALL,ANNULA	1
6	PAHZZ	5325-00-804-2274	96906	MS16625-4137	RING,RETAINING	1
7	PAHZZ	3040-01-188-7768	19207	12292648	SHAFT,SHOULDERED	1
8	PAHZZ	5210-01-196-3570	19207	12292874-2	INDICATOR,DIAL	1
9	PAHZZ	5305-01-197-4644	19207	12292661	THUMBSCREW	1
10	PAHZZ	5310-00-582-5677	80205	MS15795-810	WASHER,FLAT	1
11	PAHZZ	1005-01-207-1921	19207	12292915	SUPPORT,INDICATOR	1
12	PAHZZ	5310-00-688-2195	96906	MS51848-12	WASHER,LOCK	4
13	PAHZZ	5305-00-876-4828	80205	NAS1352-6-20P	SCREW,CAP,SOCKET HE	4
14	PAHZZ	5930-01-194-5664	19207	12292659	ARM,SWITCH ACTUATOR	1
					END OF FIGURE	

BEREGINI BEREGINI BEREGINI

MAINTAINER

TO&E TOOL SET (T1AC) - 12587952

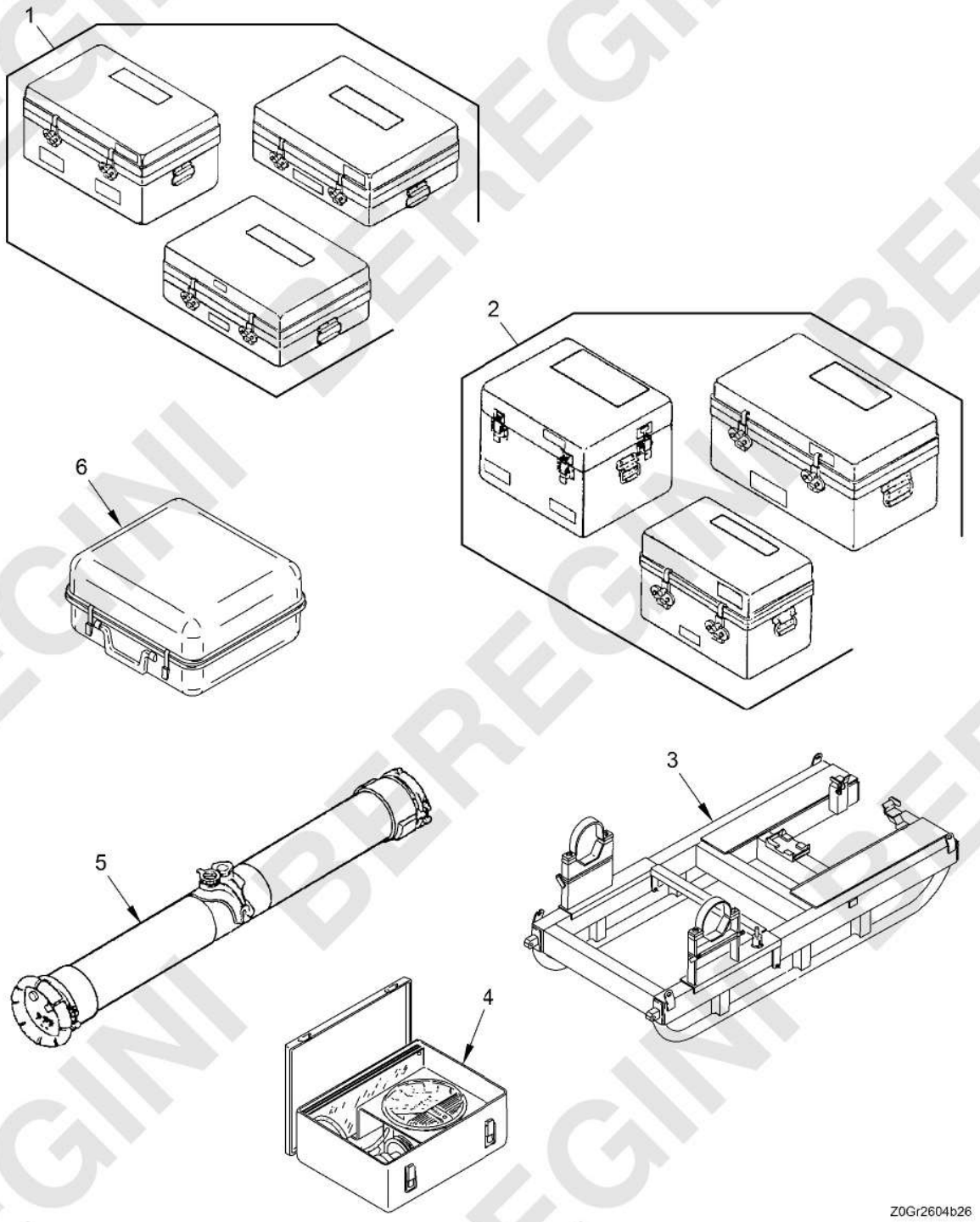

Figure 325. TO&E Tool Set (T1AC) - 12587952
(Sheet 1 of 6)

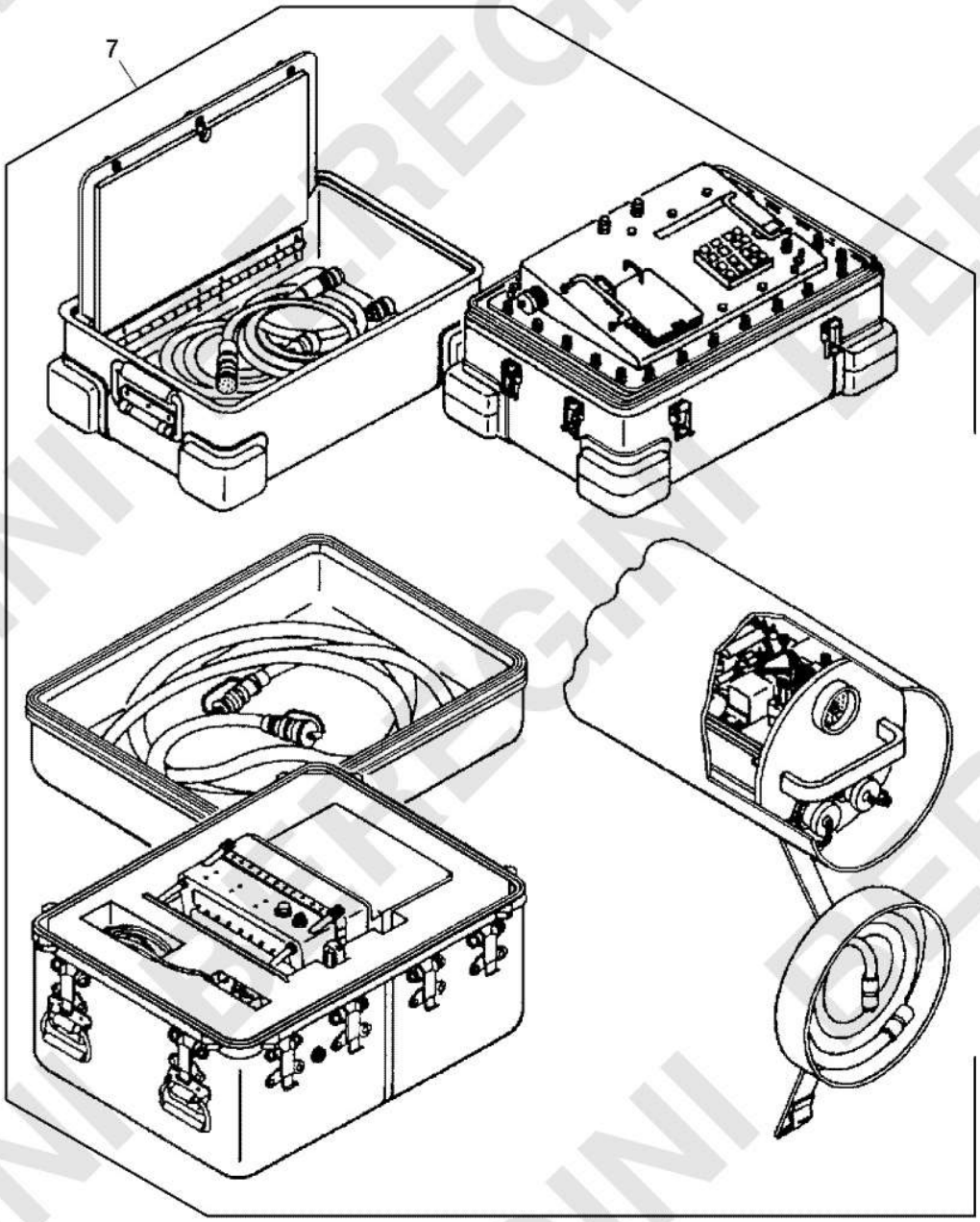

Figure 325. TO&E Tool Set (T1AC) - 12587952
(Sheet 2 of 6)

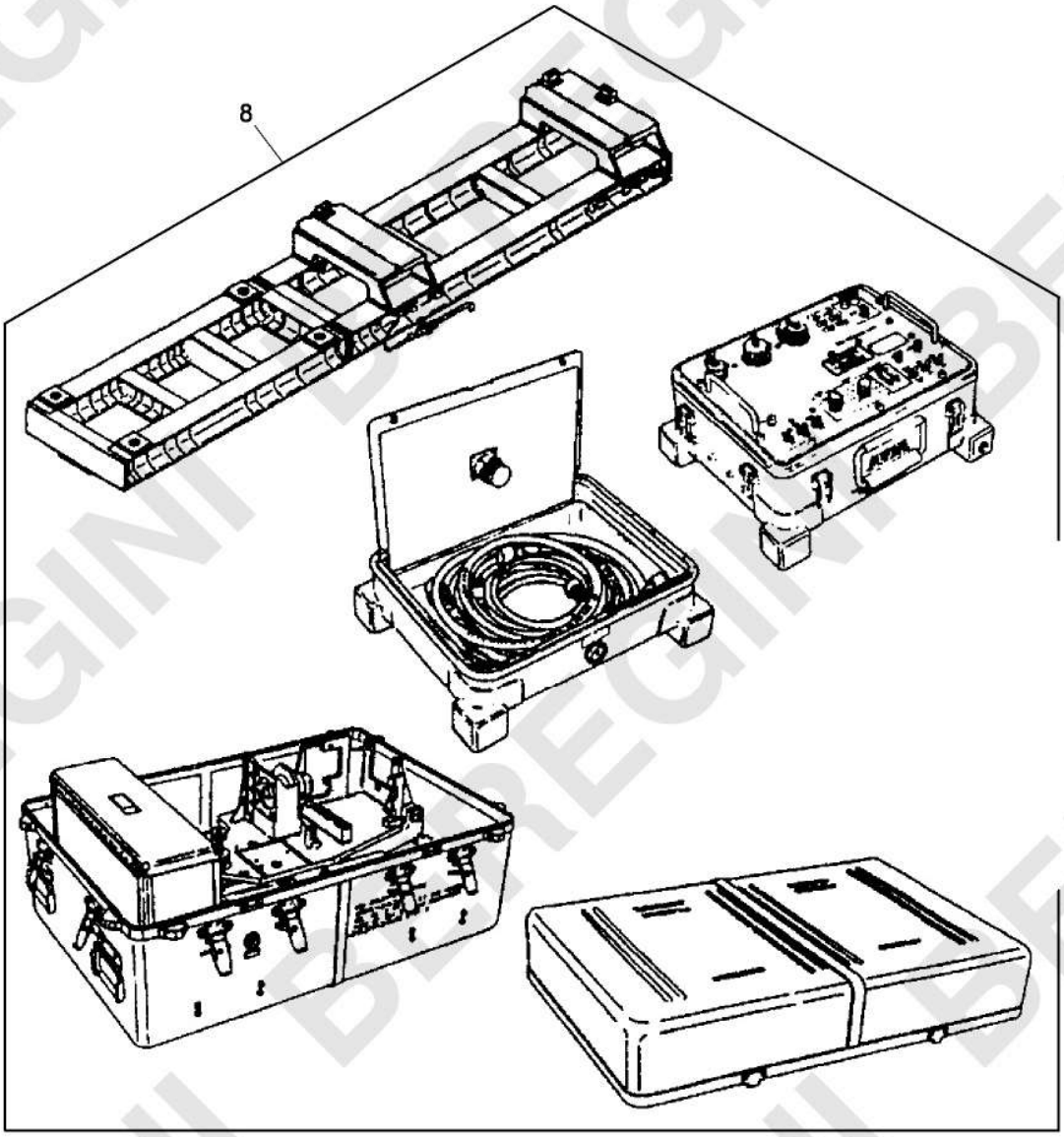

Figure 325. TO&E Tool Set (T1AC) - 12587952
(Sheet 3 of 6)

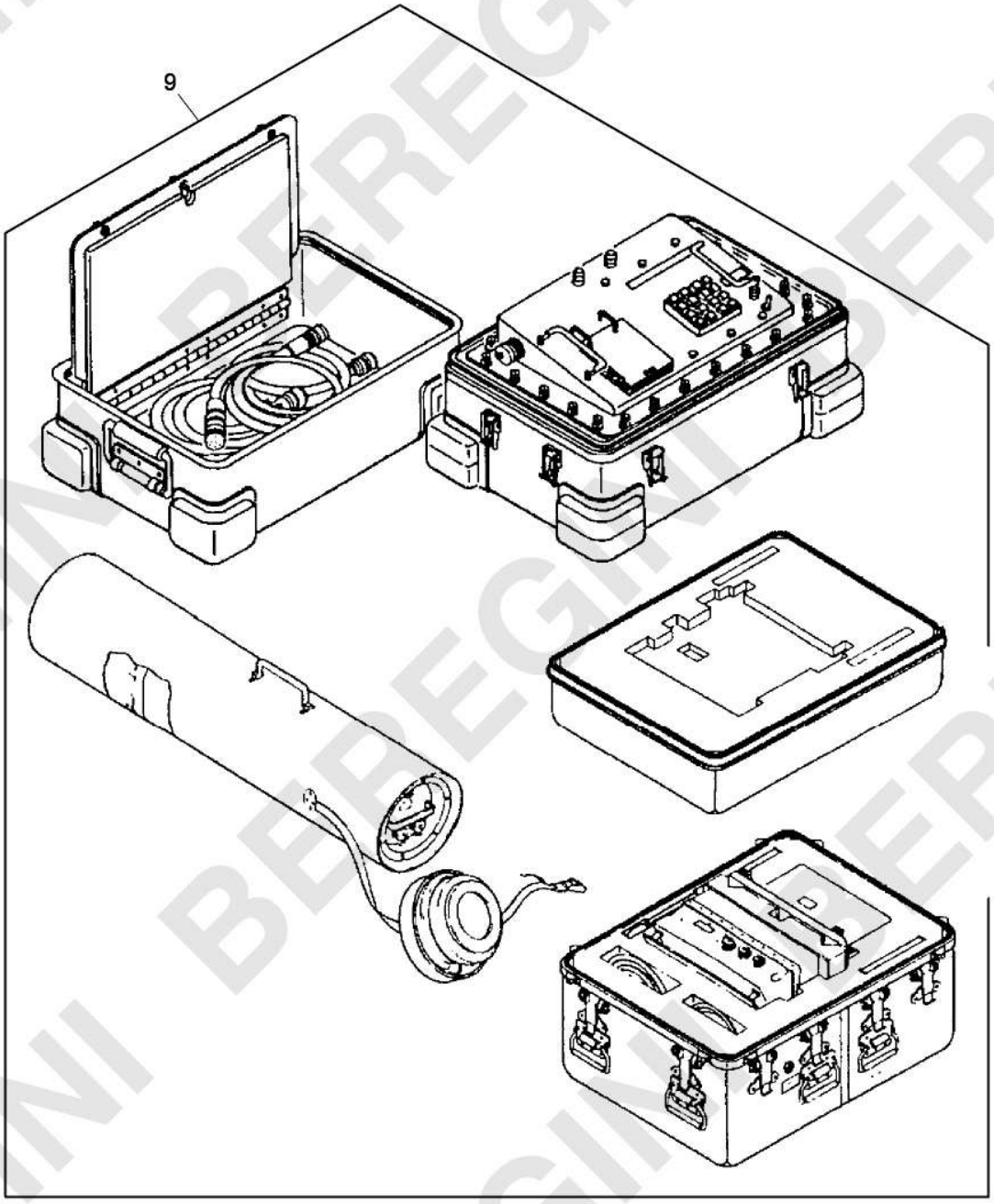

Figure 325. TO&E Tool Set (T1AC) - 12587952
(Sheet 4 of 6)

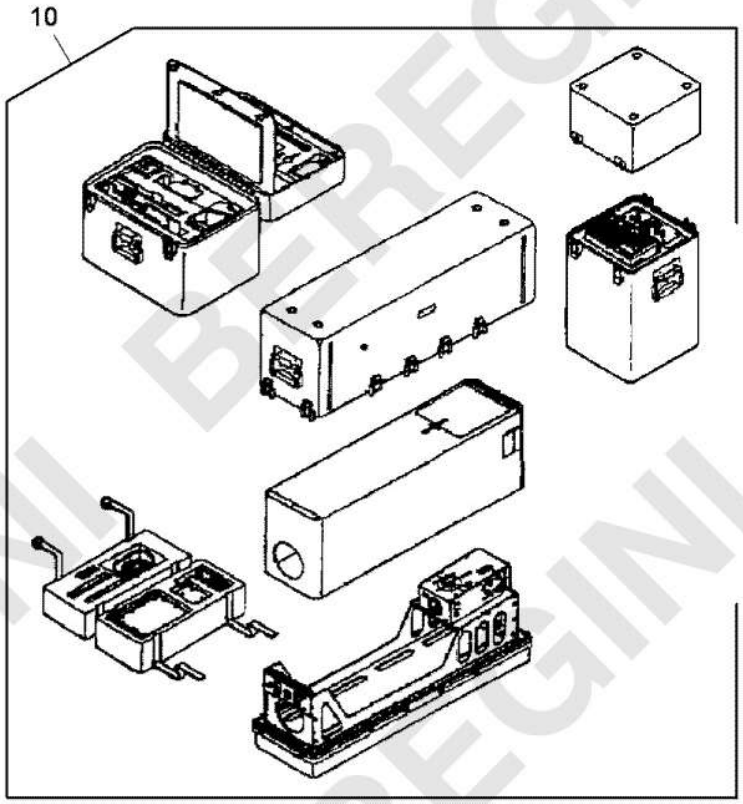

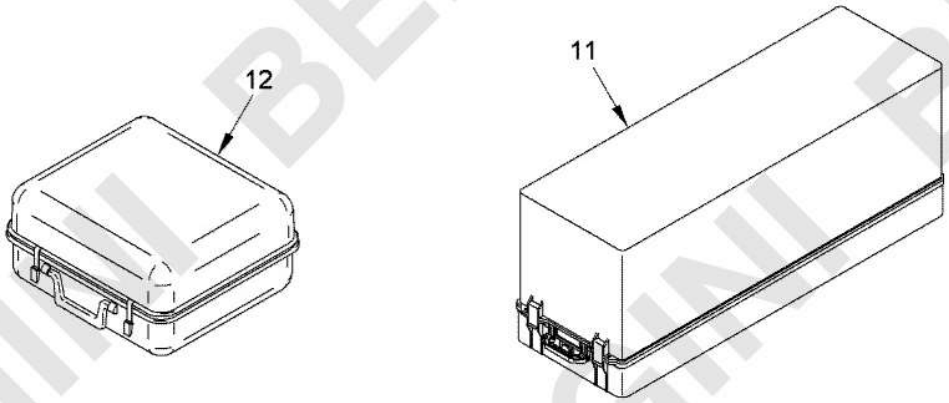

Figure 325. TO&E Tool Set (T1AC) - 12587952
(Sheet 5 of 6)

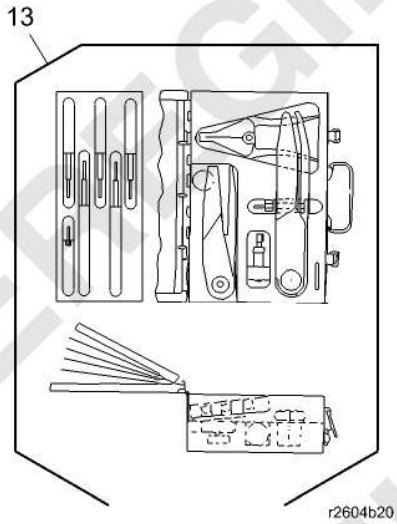

Figure 325. TO&E Tool Set (T1AC) - 12587952
(Sheet 6 of 6)

(1) ITEM NO.	(2) SMR CODE	(3) NSN	(4) CAGEC	(5) PART NUMBER	(6) DESCRIPTION AND USABLE ON CODE (UOC)	(7) QTY
					GROUP T1AC TO&E TOOL SET	
					FIGURE 325 TO&E Tool Set (T1AC) - 12587952	
1	PAFZZ	4910-01-135-4379	19207	12310100	STE-M1/FVS PEC	1
2	PAFZZ	6625-01-135-4389	19207	12310099	STE-M1/FVS CORE	1
3	PEFFF	4910-01-115-6284	19207	12298097	STAND,MAINTENANCE,A SEE FIG. 326 FOR BREAKDOWN	1
4	PAFZZ	6680-00-436-4212	81361	E5-77-2120	TESTER,AIRFLOW,GAS-	1
5	PAFZZ	4910-01-142-3144	19207	12328317	STE-DUMMY MISSLE	1
6	PAFZZ		18876	MSD KIT SL/V	MSD TESTER SL/V	1
7	PAFZZ	4935-01-108-0442	18876	13143602	TSS TEST SET REF TM 9-4935-474-24P-2	1
8	PAFZZ	4935-01-108-2968	18876	13143606	SUPPORT EQUIP,BSA REF TM 9-4935-474-24P-2	1
9	PAFZZ	4935-01-167-4723	18876	13163001	TEST SET,GUIDED MIS REF TM 9-4935-474-24P-2	1
10	PAFZZ	5855-01-037-7341	80063	SM-C-774995	TEST SET,NIGHT VISI REF TM 9-4935-474-24P-2	1
11	PAFZZ	6625-01-120-0764	19207	12309745	DSESTS,TEST SET,ELE	1
12	PAFZZ	6130-00-148-1796	19200	12972073	POWER SUPPLY	1
13	PAFZZ	5180-01-460-9328	80058	TK-105A/G	TOOL KIT,ELECTRONIC	1
					END OF FIGURE	

MAINTAINER

MAINTENANCE STAND (T1ACA) - 12298097

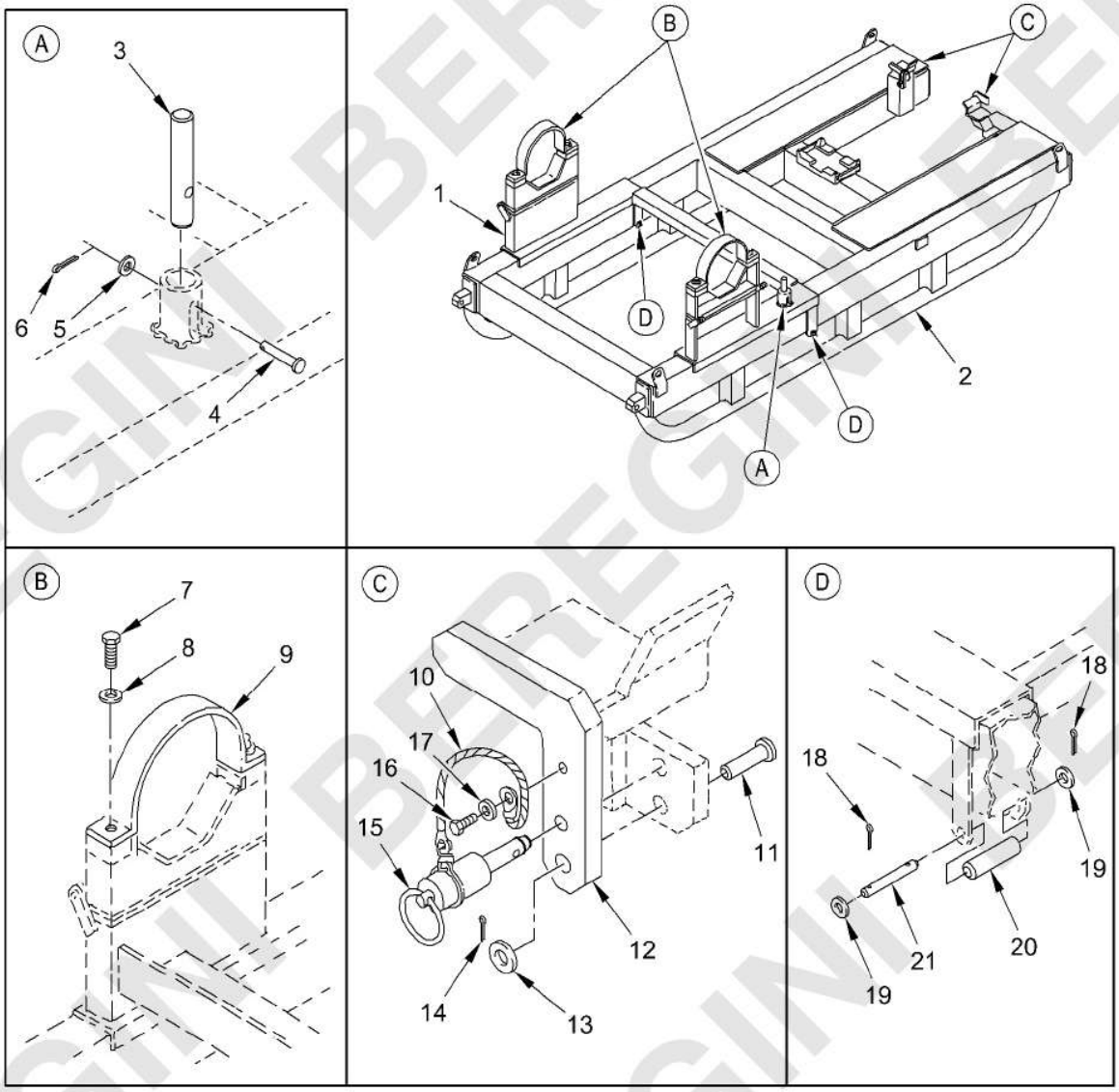

Figure 326. Maintenance Stand (T1ACA) - 12298097

(1) ITEM NO.	(2) SMR CODE	(3) NSN	(4) CAGEC	(5) PART NUMBER	(6) DESCRIPTION AND USABLE ON CODE (UOC)	(7) QTY
					GROUP T1ACA MAINTENANCE STAND	
					FIGURE 326 Maintenance Stand (T1ACA) - 12298097	
1	XAFZZ		19207	12316906	XMSN CARRIAGE	1
2	XAFZZ		19207	12316910	HANDLING STAND	1
3	PAFZZ	5315-01-308-1520	19207	12351351	PIN,STRAIGHT,HEADLE	1
4	PAFZZ	5315-00-811-1245	96906	MS20392-2C35	PIN,STRAIGHT,HEADED	1
5	PAFZZ	5310-00-809-8546	96906	MS27183-8	WASHER,FLAT	1
6	PAFZZ	5315-00-839-2325	80205	MS24665-132	PIN,COTTER	1
7	PAFZZ	5305-00-071-2071	05047	AES02C500B00AW9A81	SCREW,CAP,HEXAGON H	4
8	PAFZZ	5310-00-809-5998	96906	MS27183-18	WASHER,FLAT	4
9	PAFZZ	5340-01-226-2360	19207	12316907	STRAP,RETAINING	2
10	PAFZZ	5935-01-098-8738	77820	10-305033-003	WIRE ROPE	2
11	PAFZZ	5315-00-990-2889	96906	MS20392-5C31	PIN,STRAIGHT,HEADED	2
12	PAFZZ	5340-01-226-5223	19207	12316909	CATCH	2
13	PAFZZ	5310-00-080-6004	96906	MS27183-14	WASHER,FLAT	2
14	PAFZZ	5315-00-234-1863	80205	MS24665-300	PIN,COTTER	2
15	PAFZZ	5315-00-159-3730	96906	MS17990C608	PIN,QUICK RELEASE	2
16	PAFZZ	5305-00-071-2508	05047	AES01C250378AW9A91	SCREW,CAP,HEXAGON H	2
17	PAFZZ	5310-00-809-4058	96906	MS27183-10	WASHER,FLAT	1
18	PAFZZ	5315-00-059-0158	80205	MS24665-212	PIN,COTTER	4
19	PAFZZ	5310-00-081-4219	96906	MS27183-12	WASHER,FLAT	4
20	PAFZZ	5365-01-224-9173	19207	12316908	SPACER,SLEEVE	2
21	PAFZZ	5315-01-198-0568	19207	12295727-1	PIN,STRAIGHT,HEADLE	2
					END OF FIGURE	

BEREGINI BEREGINI BEREGINI

MAINTAINER

SUPPLEMENTAL FIELD TOOL SET (T1AD) - 412587954

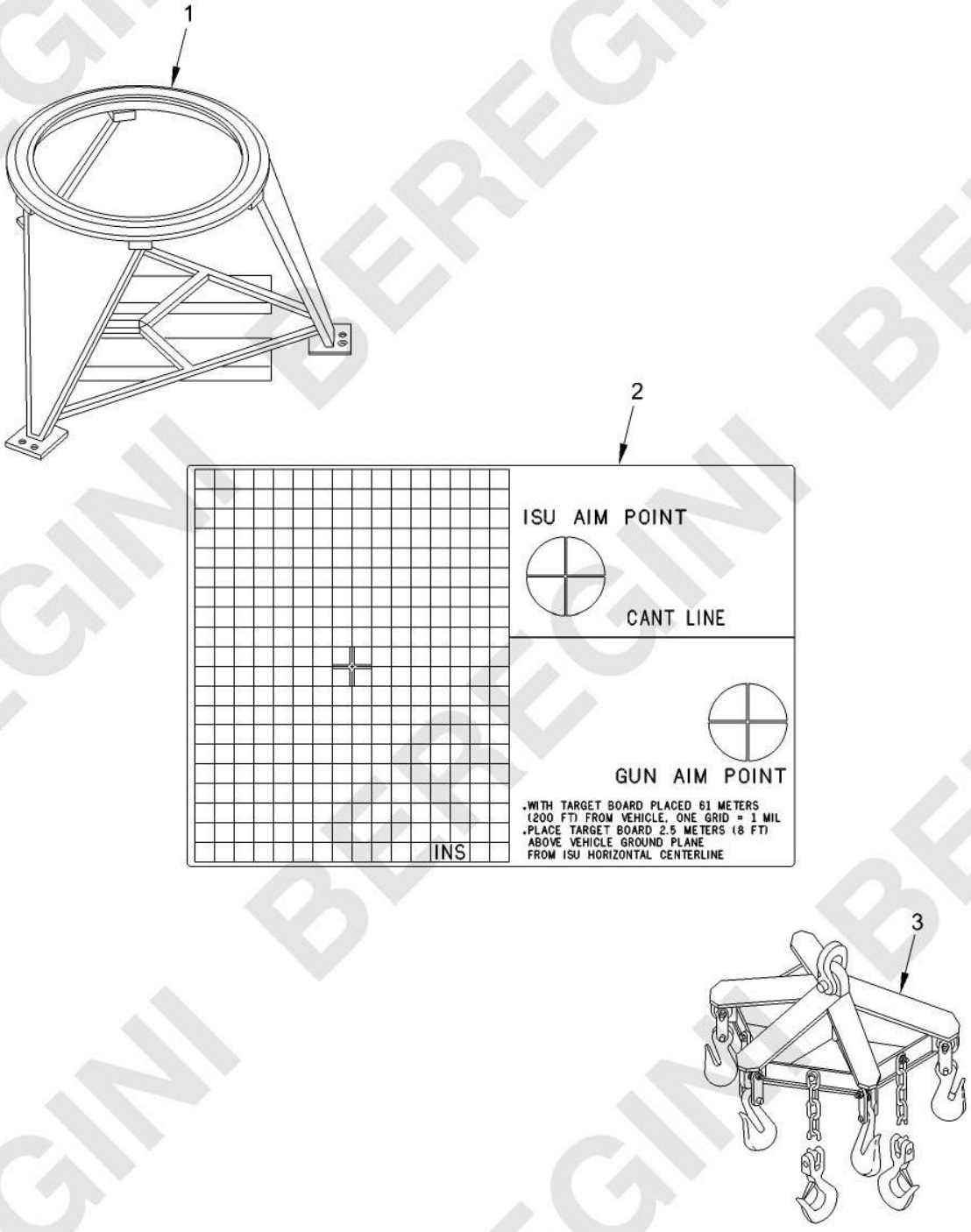

Figure 327. Supplemental Field Tool Set (T1AD) - 412587954

(1) ITEM NO.	(2) SMR CODE	(3) NSN	(4) CAGEC	(5) PART NUMBER	(6) DESCRIPTION AND USABLE ON CODE (UOC)	(7) QTY
					GROUP T1AD SUPPLEMENTAL FIELD TOOL SET	
					FIGURE 327 Supplemental Field Tool Set (T1AD) - 412587954	
1	PAFZZ	4933-01-116-3171	19207	12298099	STAND,TURRET,FIRING	1
2	PAFZZ	6920-01-472-7493	19200	12987597	TARGET,BORESIGHTING	1
3	PAFZZ	4931-01-115-5443	19207	12298103	SLING,UNIVERSAL	1
					END OF FIGURE	

BEREGINI BEREGINI BEREGINI

MAINTAINER

REPROGRAM, FIELD SUP - 12587955

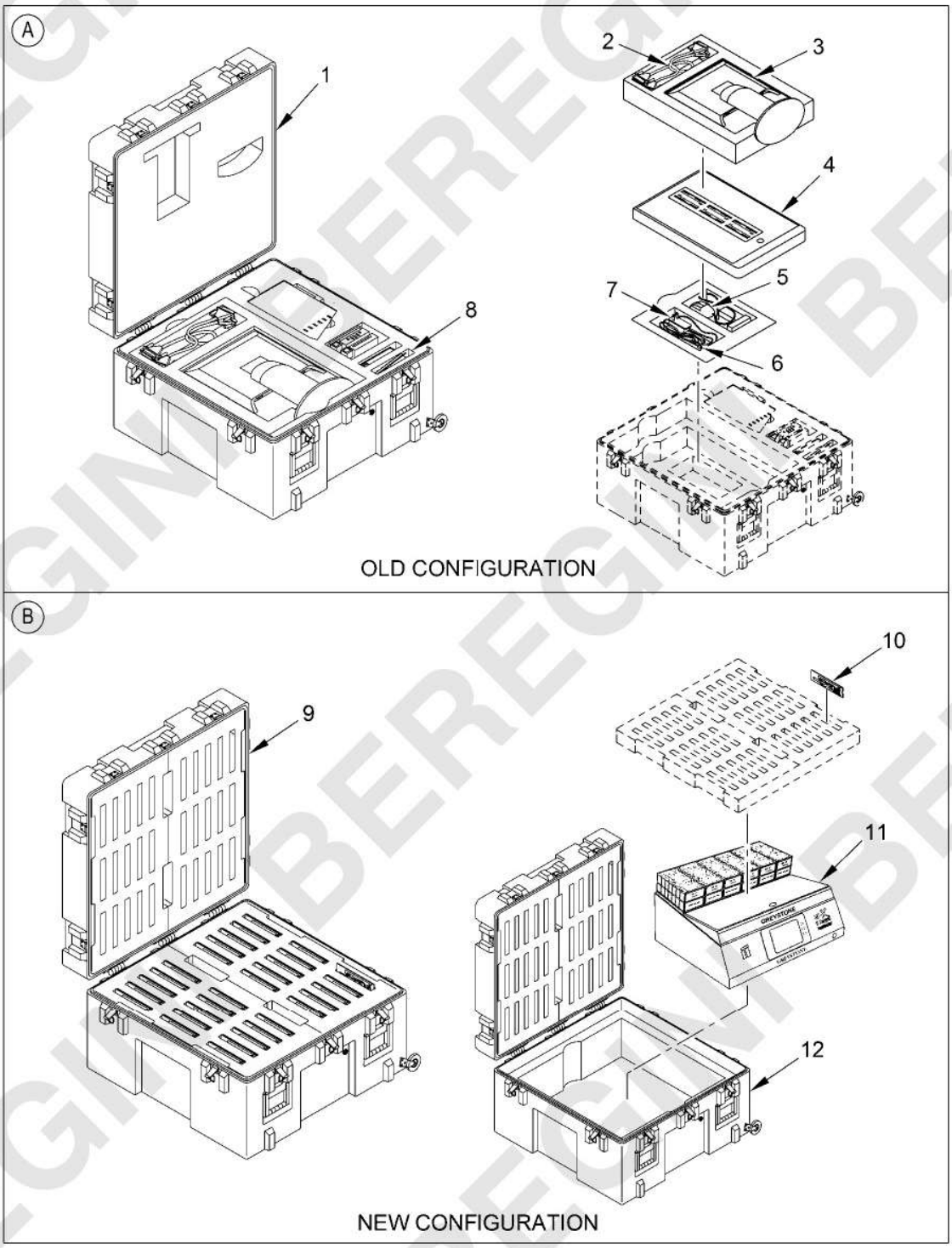

Figure 328. Reprogram, Field Sup - 12587955

(1) ITEM NO.	(2) SMR CODE	(3) NSN	(4) CAGEC	(5) PART NUMBER	(6) DESCRIPTION AND USABLE ON CODE (UOC)	(7) QTY
					GROUP T1AE FIELD SUPPORT REPROGRAM	
					FIGURE 328 Reprogram, Field Sup - 12587955	
1	PAFZZ	7045-01-593-9084	3AYH1	NTB206620R	CASE,DUPLICATOR ..... UOC: BSA	1
2	XDFZZ		1Y3P4	F-CSET-DF5-SATA	CABLE SET,DATA,PWR ..... UOC: BSA	1
3	PAFZZ	7025-01-570-5288	1Y3P4	F-LCD-XGA-15	DISPLAY UNIT ..... UOC: BSA	1
4	PAFKK	7025-01-569-3207	1Y3P4	F-ATA-DF5-P/S-M1	REPRODUCER,DISK MED ..... UOC: BSA	1
5	PAFZZ	7025-01-594-2101	1Y3P4	F-POINT-PS2-W	MOUSE,DATA ENTRY ..... UOC: BSA	1
6	PAFZZ	5995-01-594-2054	1Y3P4	F-SATA-DATACABLE	CABLE ASSEMBLY,SPEC ..... UOC: BSA	6
7	PAFZZ	6150-01-594-2088	1Y3P4	F-SATA-POWERCABLE	CABLE ASSEMBLY,POWE ..... UOC: BSA	6
8	PAFZZ	5895-01-534-4648	1Y3P4	F-KYBD-D	KEYBOARD,DATA ENTRY ..... UOC: BSA	1
9	PEFFF		1Y3P4	F-KIT-DFX5-M1	KIT,DISK DUPLICATOR ..... UOC: BSA	1
10	PAFZZ	7025-01-671-9291	1Y3P4	F-SATA-DFX-5	REPRODUCER,DISK ..... UOC: BSA	1
11	PAFZZ	5998-01-630-7489	1Y3P4	F-ADP-DFX-0443-1B	CIRCUIT CARD ASSY ..... UOC: BSA	1
11	PAFZZ	5998-01-630-7490	1Y3P4	F-ADP-DFX-0451-2A	CIRCUIT CARD ASSY ..... UOC: BSA	1
11	PAFZZ	5998-01-630-7410	1Y3P4	F-ADP-DFX-0452-2B	CIRCUIT CARD ASSY ..... UOC: BSA	1
11	PAFZZ	5998-01-630-8007	1Y3P4	F-ADP-DFX-0450-1C	CIRCUIT CARD ASSY ..... UOC: BSA	1
11	PAFZZ	5998-01-630-8124	1Y3P4	F-ADP-DFX-0444-1A	CIRCUIT CARD ASSY ..... UOC: BSA	1
12	PAFZZ	7045-01-630-7495	1Y3P4	F-CASE-DFX-M1	CASE,COMPUTER ..... UOC: BSA	1
					END OF FIGURE	

BEREGINI BEREGINI BEREGINI

MAINTAINER

REPAIR KITS

(1) ITEM NO.	(2) SMR CODE	(3) NSN	(4) CAGEC	(5) PART NUMBER	(6) DESCRIPTION AND USABLE ON CODE (UOC)	(7) QTY
					GROUP REPAIR KITS	
					FIGURE REPAIR KITS	
1	PAFZZ	4330-01-108-9296	33457	LF0051638A	PARTS KIT,FLUID PRE	1
					FILTER ELEMENT,FLUI (1) 76-2	
					BOLT (1) 76-5	
					GASKET (1) 76-3	
					GASKET (1) 76-1	
					WASHER,FLAT (1) 76-4	
2	PAHZZ	4320-01-146-8934	96046	N012-03015	REPAIR KIT,BILGE BR	1
					CAP,STARTER HOUSING (2) 142-17	
					0-RING (2) 142-16	
					BRUSH,ELECTRICAL CO (2) 142-15	
					KEY,WOODRUFF (1) 142-27	
					GASKET (3) 142-18	
					BALL BEARING (1) 142-30	
					RING,RETAINING (2) 142-28	
					RING,RETAINING (1) 142-29	
3	PAHZZ	4320-01-293-4431	96046	N012-03029	PARTS KIT,CENTRIFUG	1
					NUT,PLAIN,ROUND (1) 142-6	
					GASKET (1) 142-3	
					SEAL,NONMETALLIC SP (2) 142-2	
					SCREW,CAP,HEXAGON H (2) 142-33	
					GASKET (2) 142-13	
					BALL BEARING (1) 142-25	
4	PAFZZ	2590-01-268-7915	98459	S259008-051	LATCH ASSEMBLY	1
					HANDLE (2) 216-7	
					HANDLE (2) 217-7	
					SPRING (1) 216-6	
					SPRING (1) 217-6	
					BOLT (2) 216-5	
					BOLT (2) 217-5	
5	PAFZZ	2910-00-152-2033	53964	SA910070	FILTER ELEMENT,FLUI	1
					GASKET (1) 77-2	
					ELEMENT ASSEMBLY (1) 77-3	
					PACKING,PREFORMED (1) 77-1	
6	PAFZZ	2590-01-461-5874	59647	10583	KIT,FUEL FILLER CAP	1
					GASKET (1) 122-3	
					GASKET (1) 122-2	
					FILTER,FLUID (1) 122-1	
					SCREW,TAPPING (2) 122-5	
					PREFORMED PACKING (2) 122-6	
7	PAFZZ	2530-01-104-8941	19207	12295593	PARTS KIT,VEHICULAR	1
					INDICATOR,SIGHT,LIQ (1) 47-2	
					RING,RETAINING (1) 47-1	
					O-RING (2) 47-5	
					O-RING (1) 47-3	
8	PAFZZ	2520-01-106-0125	19207	12307600	PARTS KIT,DRIVING A	1
					BOLT,MACHINE (4) 87-2	
					SPIDER AND BEARING (2) 87-1	
					PACKING,PREFORMED (1) 87-4	

(1) ITEM NO.	(2) SMR CODE	(3) NSN	(4) CAGEC	(5) PART NUMBER	(6) DESCRIPTION AND USABLE ON CODE (UOC)	(7) QTY
9	PAFZZ	5330-01-238-9715	19207	12350614	GASKET SET	1
					GASKET (2) 118-33	
					WASHER,SEAL (80) 117-4	
					WASHER,SEAL (80) 118-11	
					GASKET (5) 117-72	
					GASKET (5) 118-43	
					GASKET (1) 118-38	
					GASKET (1) 117-54	
					GASKET (1) 118-17	
					GASKET (2) 118-58	
					GASKET (1) 118-35	
					GASKET (1) 119-17	
10	PAFZZ	5330-01-238-9716	19207	12350615	GASKET SET	1
					GASKET (1) 117-18	
					GASKET (1) 117-2	
					GASKET (2) 117-40	
					GASKET (1) 117-61	
					GASKET (2) 117-65	
11	PAFZZ	5330-01-244-5773	19207	12350779	PARTS KIT,SEAL REPL	1
					SCREW,CAP,HEXAGON H (4) 52-24	
					WASHER,FLAT (4) 52-23	
					SEAL,PLAIN (1) 52-12	
					WASHER,KEY (1) 52-18	
					BEARING,ROLLER,TAPE (1) 52-13	
					BEARING,ROLLER,TAPE (1) 52-17	
					NUT,PLAIN,CASTELLAT (1) 52-20	
					PIN,COTTER (1) 52-19	
					O-RING (1) 52-21	
12	PAFZZ	2530-01-440-7615	19207	12466485	PARTS KIT,TRACK SHO	1
					PAD,TRACK SHOE (1) 49-3	
					NUT,SELF-LOCKING HE (1) 49-5	
13	PAFZZ	2910-01-483-1256	19207	12469879	PARTS KIT,ENGINE FU	1
					RETAINER SLEEVE,SEA (4) 118-46	
					RETAINER SLEEVE,SEA (4) 119-32	
					BRACKET,FUEL PUMP (8) 118-51	
					FUEL PUMP,ELECTRICA (4) 118-47	
					FUEL PUMP,ELECTRICA (4) 119-35	
					SCREW,CAP,HEXAGON H (16) 118-49	
					NUT,SELF-LOCKING,EX (16) 118-56	
14	PAFZZ	2510-01-531-9565	19207	12484220	KIT,FRONT FENDER	1
					BUSHING,MACHINE THR (4) 34-6	
					SKIRT,FENDER (2) 34-7	
					BRACKET,MOUNTING (2) 34-2	
					PAD,CUSHIONING (2) 34-1	
15	PAFZZ	5330-01-604-9349	19207	12540533	PARTS KIT,GASKET	1
					GASKET (1) 119-22	
					SEAL,NONMETALLIC RO (3) 119-8	
					SEAL,NONMETALLIC SP (1) 119-19	
					SEAL,NONMETALLIC SP (2) 119-5	
					GASKET (1) 118-35	
					GASKET (1) 119-17	
					O-RING (4) 119-7	
					O-RING (2) 119-6	

(1) ITEM NO.	(2) SMR CODE	(3) NSN	(4) CAGEC	(5) PART NUMBER	(6) DESCRIPTION AND USABLE ON CODE (UOC)	(7) QTY
16	PAHZZ	3010-01-313-7738	19200	12561065	PARTS KIT,COUPLING, ...	1
					SHIFT ROD ASSY (1) 255-56	
					PIN,SPRING (2) 255-59	
					SETSCREW (1) 255-57	
					NUT,PLAIN,HEXAGON (1) 255-58	
17	PAFZZ	1005-01-545-4546	19200	12976323	KIT,SPRING REPLACE	1
					SPRING,HELICAL,EXTE (2) 241-32	
					BUSHING,SPRING (8) 241-27	
					RING,RETAINING (8) 241-26	
18	PADZZ	5330-01-303-9765	15434	3010242	GASKET SET FUEL PUM	1
					PLUG,COVER (1) 62-268	
					SEAL,SPECIAL (1) 62-269	
					GASKET (1) 63-4	
					PACKING,PREFORMED (1) 63-16	
19	PAFZZ	5330-01-309-9437	15434	3803194	GASKET SET	1
					O-RING (2) 62-112	
					GASKET (2) 62-131	
					GASKET (2) 62-135	
					GASKET (5) 62-292	
					GASKET (8) 62-84	
					GASKET (2) 62-63	
					GASKET (1) 62-127	
20	PAFZZ	5330-01-310-0996	15434	3803561	GASKET SET	1
					RUBBER STRIP (1) 62-35	
					GASKET (1) 62-282	
					GASKET (2) 62-279	
					GASKET (4) 62-296	
					GASKET (1) 62-16	
					GASKET (1) 62-24	
					GASKET (1) 62-230	
					GASKET (1) 62-151	
					GASKET (1) 62-25	
					SEAL,PLAIN ENCASED (1) 62-30	
					GASKET (1) 62-275	
					SEAL,PLAIN ENCASED (1) 62-42	
					O-RING (1) 62-162	
					O-RING (1) 62-171	
					SEAL,PLAIN (4) 62-178	
					WASHER,FLAT (2) 62-144	
					GASKET (1) 62-15	
					GASKET (1) 62-235	
					GASKET (1) 62-3	
					GASKET (1) 62-13	
					GASKET (1) 62-266	
					SPACER,RING (3) 62-159	
21	XDDZZ		13829	391 1823 215	PARTS KIT,HYDRAULIC	1
					RETAINER,PACKING (2) 26-12	
					RETAINER,PACKING (2) 26-14	
					RETAINER,PACKING (4) 26-23	
					O-RING (1) 26-30	
					PACKING,PREFORMED (2) 26-24	
					PACKING,PREFORMED (2) 26-11	
					PACKING,PREFORMED (2) 26-13	
					PACKING,PREFORMED (2) 26-10	
					PACKING,PREFORMED (2) 26-4	
					PACKING,PREFORMED (2) 26-26	

(1) ITEM NO.	(2) SMR CODE	(3) NSN	(4) CAGEC	(5) PART NUMBER	(6) DESCRIPTION AND USABLE ON CODE (UOC)	(7) QTY
22	PAFZZ	2520-01-292-2992	15434	4920065	STC FUEL TUBE KIT	1
					TUBE,STC FUEL SUPPL (1) 62-215	
23	PAFZZ	4330-01-136-4446	19207	5705235	PARTS KIT,FLUID PRE	1
					INDICATOR,PRESSURE (1) 65-4	
					INDICATOR,PRESSURE (1) 71-2	
					O-RING (1) 65-6	
					O-RING (1) 71-4	
					O-RING (1) 65-5	
					O-RING (1) 71-3	
24	PAFZZ	2530-01-308-1390	19207	5705484	PARTS KIT,SEPARATOR	1
					FILTER,FUEL (1) 156-2	
					O-RING (1) 156-3	
25	PCFZZ	5180-01-312-7906	19207	57K0332	REPAIR KIT,FUEL TAN	1
					WIRE FABRIC (1) 118-70	
					PLUG,MACHINE THREAD (3) 118-72	
					PLUG,MACHINE THREAD (3) 118-71	
					SEALING COMPOUND (1) 118-73	
26	PAFZZ	2530-01-296-4907	19207	57K0388	PARTS KIT,TRACK IDL	1
					BEARING,ROLLER,TAPE (1) 53-19	
					SEAL,PLAIN (1) 53-21	
					SEAL,NONMETALLIC SP (1) 53-18	
					RETAINER,BALL,BEARI (1) 53-20	
					BEARING,ROLLER,TAPE (1) 53-7	
					PIN,COTTER (1) 53-22	
					O-RING (2) 53-4	
27	PAFZZ	2530-01-296-4899	19207	57K0389	PARTS KIT,SUPPORT A	1
					WASHER,KEY (2) 52-5	
					SEAL,PLAIN (1) 52-26	
					SEAL,PLAIN ENCASED (1) 52-2	
					O-RING (1) 52-1	
28	PAFZZ	2530-01-296-4901	19207	57K0390	PARTS KIT,POWER STE	1
					KEY,MACHINE (1) 124-7	
					PIN,SPRING (2) 124-2	
					PIN,SPRING (1) 124-6	
					KEY,WOODRUFF (1) 124-4	
29	PAFZZ	2530-01-296-4897	19207	57K0391	PARTS KIT,TORSION B	1
					O-RING (2) 47-5	
30	PADZZ	2520-01-288-2739	19207	57K0670	PARTS KIT,HYDRAULIC	1
					O-RING (7) 68-2	
					GASKET (1) 68-4	
31	PADZZ	2530-01-323-2626	19207	57K0682	PARTS KIT,BRAKE SHO	1
					WASHER,LOCK (16) 69-2	
					GASKET (1) 69-4	
32	PAFZZ	2541-01-633-2927	19207	57K0777	EQUIPMENT KIT,VEHIC	1
					O-RING (1) 65-5	
					O-RING (1) 65-6	
					COVER,FLUID FILTER (1) 65-7	
					COVER PLUG,OIL FILT (1) 65-9	

(1) ITEM NO.	(2) SMR CODE	(3) NSN	(4) CAGEC	(5) PART NUMBER	(6) DESCRIPTION AND USABLE ON CODE (UOC)	(7) QTY
33	PAFZZ	2590-01-389-9875	19207	57K1399	REPAIR KIT,SUPPORT	1
					SEAL,PLAIN (1) 46-10 BEARING (2) 46-7 PIN,COTTER (1) 46-12 O-RING (1) 46-4	
34	PAFZZ	2520-01-581-4184	19207	57K6607	ELECTRONIC ASSY,MOD	1
					ADAPTER ASSEMBLY (1) 144-7 ELECTRONIC ASSEMBLY (1) 144-5 CLAMP,LOOP (1) 144-8 STRAP,TIEDOWN,ELECT (1) 144-6	
35	PAFZZ	2530-01-598-1725	19207	57K6723	TRACK GUIDE REPAIR	1
					GUIDE,CHAIN,VEHICLE (1) 49-7 CAP,GUIDE TRACK (1) 49-12 SCREW,CAP,HEXAGON H (2) 49-6	
36	PAFZZ	2530-01-598-1728	19207	57K6724	END CONNECT,RPR KIT	1
					SCREW,CAP,HEXAGON H (2) 49-9 LINK,TRACK SHOE,CON (2) 49-10 WEDGE,TRACK (2) 49-11	
37	PAFZZ	2530-01-598-1727	19207	57K6725	TRACK PAD,RPR KIT	1
					NUT,SELF-LOCKING HE (2) 49-14 PAD,CUSHIONING (2) 49-13	
38	PAFZZ	2540-01-609-8432	19207	57K6743	PARTS KIT,SEAT,VEHI	1
					BOLT,MACHINE (2) 135-18 SCREW,CAP,HEXAGON H (2) 135-12 WASHER,FLAT (4) 135-11 WASHER,FLAT (4) 136-3 WASHER,FLAT (13) 135-2 BRACKET,MOUNTING (1) 135-13 BRACKET,MOUNTING (1) 136-4 BRACKET,MOUNTING (1) 135-16 BRACKET,MOUNTING (1) 136-6 SCREW,CAP,SOCKET HE (4) 135-14 SCREW,CAP,SOCKET HE (4) 136-5 SPACER,SLEEVE (2) 135-17 SPACER,SLEEVE (2) 136-7 NUT,SELF-LOCKING,HE (4) 135-10 NUT,SELF-LOCKING,HE (2) 135-15 NUT,SELF-LOCKING,HE (2) 136-10	

END OF FIGURE

MAINTAINER

BULK MATERIAL

(1) ITEM NO.	(2) SMR CODE	(3) NSN	(4) CAGEC	(5) PART NUMBER	(6) DESCRIPTION AND USABLE ON CODE (UOC)	(7) QTY
					GROUP BULK MATERIAL	
					FIGURE BULK	
1	PAFZZ		19207	12466071	FASTENER TAPE,HOOK;	1
2	PAFZZ	8315-00-450-9837	58536	A-A-55126	FASTENER TAPE,HOOK;	1
3	PAFZZ		19207	12466072	FASTENER TAPE,PILE;	1
4	PAFZZ	5325-01-450-0401	81349	M22529/2-2R-25	GROMMET,METALLIC;	1
5	PAFZZ		19207	10902595	HOSE,AIR DUCT;	1
6	PAFZZ	4910-01-118-7711	19207	12298091	LIFTER,ROAD WHEEL;	1
7	PAFZZ	4720-01-475-4481	19207	8724784	HOSE,AIR DUCT;	1
8	PAFZZ	4720-01-215-9699	19207	12350526-1	HOSE,FLEXIBLE;	1
9	PAFZZ	4720-00-580-6944	19207	12350526-2	HOSE,FLEXIBLE;	1
10	PAFZZ	4720-00-177-0671	19207	11662995	HOSE,NONMETALLIC;	1
11	PAFZZ	4720-01-045-2605	19207	11662995-1	HOSE,NONMETALLIC;	1
12	PAFZZ	4720-01-114-7686	19207	11662995-2	HOSE,NONMETALLIC;	1
13	PAFZZ	4720-01-106-6616	19207	11662995-3	HOSE,NONMETALLIC;	1
14	PAFZZ	4720-01-110-4315	19207	11662995-4	HOSE,NONMETALLIC;	1
15	PAFZZ	4720-01-240-3058	19207	11662995-5	HOSE,NONMETALLIC;	1
16	PAFZZ	4910-01-118-7711	19207	12298091	LIFTER,ROAD WHEEL;	1
17	PAFZZ	4720-01-462-1281	19207	12309272-7	HOSE,NONMETALLIC;	1

MAINTAINER

BULK MATERIAL

(1) ITEM NO.	(2) SMR CODE	(3) NSN	(4) CAGEC	(5) PART NUMBER	(6) DESCRIPTION AND USABLE ON CODE (UOC)	(7) QTY
18	PAFZZ	4720-00-189-2777	81343	20R1ECS-C-32XR	HOSE,NONMETALLIC;	1
19	PCFZZ	4720-00-278-1108	81349	M6000-N-01000	HOSE,NONMETALLIC;	1
20	PAFZZ	5640-00-469-7723	98441	2650-12	INSULATION SLEEVING;	1
21	PAFZZ	5970-00-815-1295	81343	M23053/5-106-0	INSULATION SLEEVING;	1
22	PAFZZ	5970-01-482-1073	81349	M3190/7-20-1	INSULATION SLEEVING;	1
23	PAFZZ	5970-00-889-3844	80063	SM-A-680088-25	INSULATION SLEEVING;	1
24	PAFZZ	4910-01-118-7711	19207	12298091	LIFTER,ROAD WHEEL;	1
25	PAFZZ	5970-00-889-3844	80063	SM-A-680088-25	INSULATION SLEEVING;	1
26	PAFZZ	5970-00-889-3844	80063	SM-A-680088-25	INSULATION SLEEVING;	1
27	PAFZZ	5970-00-889-3844	80063	SM-A-680088-25	INSULATION SLEEVING;	1
28	PAFZZ	5970-00-889-3844	80063	SM-A-680088-25	INSULATION SLEEVING;	1
29	PAFZZ	5970-00-889-3844	80063	SM-A-680088-25	INSULATION SLEEVING;	1
30	PAFZZ	5970-00-889-3844	80063	SM-A-680088-25	INSULATION SLEEVING;	1
31	PAFZZ	5970-00-889-3844	80063	SM-A-680088-25	INSULATION SLEEVING;	1
32	PAFZZ	5970-00-889-3844	80063	SM-A-680088-25	INSULATION SLEEVING;	1
33	PAFZZ	9320-01-162-3712	19207	12328582-1	RUBBER SHEET,CELLUL;	1
34	PAFZZ	9320-01-162-3712	19207	12328582-1	RUBBER SHEET,CELLUL;	1
35	PAFZZ	9320-01-561-9490	19207	12328582-5	RUBBER SHEET,CELLUL;	1

MAINTAINER

BULK MATERIAL

(1) ITEM NO.	(2) SMR CODE	(3) NSN	(4) CAGEC	(5) PART NUMBER	(6) DESCRIPTION AND USABLE ON CODE (UOC)	(7) QTY
36	PAFZZ	5330-01-162-3714	19207	12328582-9	RUBBER SHEET,CELLUL;	1
37	PAFZZ	9320-01-162-3715	19207	12328584-2	RUBBER SHEET,SOLID;	1
38	PAFZZ	9320-01-389-3248	19207	12328593-3	RUBBER SHEET,SOLID;	1
39	PAFZZ	9320-01-501-0006	5G077	2BC715A14B14C12 F17G21Z	RUBBER SHEET,SOLID;	1
40	PAFZZ	5355-01-486-6089	19200	12986345	POINTER,DIAL;	1
41	PAFZZ	5355-01-486-6089	19200	12986345	POINTER,DIAL;	1
42	PAFZZ	5330-01-185-0501	19207	12328583-10	RUBBER STRIP;	1
43	PAFZZ	5330-01-225-1043	19207	12328583-19	RUBBER STRIP;	1
44	PAFZZ	9320-01-338-2385	19207	12328583-20	RUBBER STRIP;	1
45	PAFZZ	5330-01-162-3866	19207	12328583-5	RUBBER STRIP;	1
46	PAFZZ	5330-01-162-3867	19207	12328583-7	RUBBER STRIP;	1
47	PAFZZ	5330-01-162-3865	19207	12328583-8	RUBBER STRIP;	1
48	PAFZZ	5330-01-140-6556	19207	12308212	SEAL,NONMETALLIC SP;	1
49	PAFZZ	9535-00-228-3137	81343	AMS-QQ-A-250/2	SHEET,METAL;	1
50	PAFZZ	9330-01-338-2564	58536	A-A-59602-2B	TUBING,PLASTIC,SPIR;	1
51	PAFZZ	9330-01-468-1853	09106	HTIN-B	TUBING,PLASTIC,SPIR;	1
52	PAFZZ	9330-01-143-6255	0AHP5	B47287-II-1/4	TUBING,PLASTIC,SPIR;	1
53	PAFZZ	6145-00-177-4607	81349	M81044/9-20-9	WIRE,ELECTRICAL;	1

MAINTAINER

BULK MATERIAL

(1) ITEM NO.	(2) SMR CODE	(3) NSN	(4) CAGEC	(5) PART NUMBER	(6) DESCRIPTION AND USABLE ON CODE (UOC)	(7) QTY
					END OF FIGURE	

MAINTAINER

NATIONAL STOCK NUMBER INDEX

STOCK NUMBER	FIG.	ITEM
5310-00-000-0079	90	26
	92	4
5120-00-001-5583	305	8
5331-00-003-6690	256	7
5310-00-004-5033	15	25
	25	131
	27	25
	28	31
	41	8
	57	7
	93	4
	93	7
	93	24
	95	78
	99	22
	103	79
	107	13
	110	39
	126	39
	129	3
	141	2
	142	5
	143	5
	146	50
	154	50
	173	47
	184	57
	185	64
	186	14
	187	12
	227	17
	233	8
[redacted]	[redacted]	[redacted]
[redacted]	[redacted]	[redacted]
[redacted]	[redacted]	[redacted]
[redacted]	[redacted]	[redacted]
[redacted]	[redacted]	[redacted]
	271	73
	274	52
	275	75
[redacted]	[redacted]	[redacted]
[redacted]	[redacted]	[redacted]
[redacted]	[redacted]	[redacted]
	296	9
5310-00-004-5034	209	15
	261	29
4730-00-009-8619	25	112
2540-00-010-2503	139	33
	140	21
	199	16
	200	26
4730-00-011-3175	62	2
5310-00-011-5093	184	11
	185	13
	300	59
5310-00-011-6121	184	14
5315-00-012-0123	25	40
	182	13
5315-00-013-7258	46	12
	51	12
	52	19
4730-00-014-1539	59	70

STOCK NUMBER	FIG.	ITEM
	81	48
5310-00-014-5850	12	26
	25	68
	25	99
	27	48
	28	53
	81	51
	96	2
	97	35
	104	2
	105	39
	118	67
	127	39
	149	11
	151	2
	153	22
	154	24
	162	6
	191	17
	268	22
	270	26
	271	21
	274	27
	275	25
	276	23
4240-00-018-3079	305	31
4730-00-018-9566	142	31
	143	32
6240-00-019-0877	116	7
6240-00-019-3093	111	10
	114	7
	116	9
	280	7
5355-00-020-3511	150	1
4730-00-021-1802	61	22
5305-00-021-3616	97	3
	105	6
	142	12
	143	12
5305-00-032-3697	235	11
5310-00-036-6770	138	16
	146	36
	154	45
4730-00-038-7015	133	122
5306-00-042-6921	27	31
	28	37
	29	79
5310-00-045-3296	59	39
	94	35
	97	32
	102	35
	105	37
	142	32
	143	33
	147	15
	164	4
	[redacted]	[redacted]
5310-00-045-4007	107	17
	[redacted]	[redacted]
5340-00-045-9876	62	100
5360-00-045-9877	62	99
2640-00-050-1229	247	16
5306-00-050-1238	139	35
	140	22
5306-00-050-1239	126	58
5365-00-050-1378	199	30

STOCK NUMBER	FIG.	ITEM
5310-00-050-3520	16	11
4730-00-050-4203	232	14
4730-00-050-4208	50	2
	96	24
	104	24
5340-00-050-9077	300	28
5305-00-050-9215	41	6
5305-00-050-9227	25	137
	133	61
5305-00-050-9228	235	17
5305-00-050-9229	96	53
	104	52
	236	15
	237	61
5305-00-050-9230	127	40
	234	11
	237	74
5305-00-050-9231	25	118
5305-00-050-9235	234	16
[redacted]	[redacted]	[redacted]
	[redacted]	[redacted]
5306-00-051-4072	79	8
	88	2
5305-00-051-4076	99	49
	107	50
5306-00-051-4079	126	17
5305-00-051-4081	65	40
	126	13
5340-00-051-5473	218	18
5315-00-051-6717	85	5
5305-00-051-6751	172	47
5305-00-052-2236	184	97
	184	97
	185	114
	185	114
5970-00-052-3301	241	21
5310-00-054-0041	251	9
5305-00-054-5644	241	13
5305-00-054-5646	239	8
5305-00-054-5647	236	21
	241	25
5305-00-054-6651	75	2
5305-00-054-6652	112	5
	247	9
	251	15
5305-00-054-6653	239	11
	240	9
5305-00-054-6666	2	14
5305-00-054-6668	311	2
4730-00-054-7182	81	41
5360-00-054-8367	25	130
	141	15
	161	2
5305-00-054-9275	25	10
5340-00-055-9922	12	18
5310-00-056-3395	35	4
	312	6
5305-00-056-9384	314	9
5315-00-056-9386	249	15
5999-00-057-2929	111	6
	116	6
	147	4
5310-00-058-1305	12	5
	25	73
	27	47
	28	58

STOCK NUMBER	FIG.	ITEM
	29	25
	98	57
	106	60
	127	62
	129	40
	162	29
	183	7
	184	6
	185	6
	193	3
	194	3
	211	15
	300	24
5315-00-058-1568	127	47
	229	6
5310-00-058-1626	315	6
5305-00-058-4106	235	110
5315-00-058-6011	32	9
	165	18
5305-00-058-9370	73	25
5315-00-058-9756	140	28
5315-00-058-9767	235	93
	237	6
	255	85
5315-00-058-9780	145	31
5315-00-058-9782	235	4
	255	69
5315-00-058-9816	138	37
5315-00-059-0158	326	18
5315-00-059-0206	213	14
5315-00-059-0491	132	51
	133	68
5305-00-059-3660	59	68
5305-00-059-3676	119	30
5310-00-061-1258	94	6
	102	6
	178	9
	179	4
	232	5
	257	20
	[redacted]	[redacted]
	[redacted]	[redacted]
	300	6
5310-00-061-4650	58	38
	123	8
5305-00-062-4378	62	92
4730-00-063-3073	57	26
5342-00-065-1971	95	15
	103	15
5310-00-067-6357	99	35
	107	35
	141	25
	162	75
5310-00-067-9507	57	74
	59	13
5305-00-068-0508	15	43
	28	35
	38	23
	57	34
	57	88
	65	17
	65	32
	68	6
	69	5
	70	7
	73	20

STOCK NUMBER	FIG.	ITEM
	82	3
	86	4
	90	12
	93	18
	99	41
	106	48
	107	41
	127	90
	129	21
	132	8
	133	12
	138	40
	141	33
	146	6
	161	12
	162	7
	170	23
	171	1
	173	10
	190	2
	190	2
	193	39
	194	42
	202	2
	205	10
	208	12
	209	12
	210	20
	221	5
	232	13
	235	38
	257	22
	[redacted]	[redacted]

STOCK NUMBER	FIG.	ITEM
	[redacted]	[redacted]
	[redacted]	[redacted]
	270	12
	271	19
	274	16
	275	20
	[redacted]	[redacted]
	[redacted]	[redacted]
	300	45
5305-00-068-0509	39	18
	40	45
	94	72
	98	56
	99	9
	106	59
	107	11
	107	26
	133	50
	172	50
	257	4
	[redacted]	[redacted]
	268	2
	274	11
	276	2
	300	25
	[redacted]	[redacted]
5305-00-068-0510	2	2
	15	24
	25	96
	27	15
	28	15
	29	75
	38	66

STOCK NUMBER	FIG.	ITEM
	39	48
	40	20
	41	7
	60	41
	61	15
	62	19
	82	1
	93	3
	93	25
	94	19
	99	23
	102	19
	107	12
	117	56
	123	18
	129	7
	132	43
	133	30
	141	1
	146	44
	154	25
	170	16
	177	8
	178	5
	179	13
	181	57
	182	33
	184	33
	185	34
	186	13
	187	8
	189	7
	190	48

STOCK NUMBER	FIG.	ITEM
	207	3
	218	7
	224	6
	227	24
	233	4
	[redacted]	[redacted]
	271	6
	275	9
	[redacted]	[redacted]
5305-00-068-0511	2	17
	12	1
	22	1
	25	157
	29	47
	31	24
	35	1
	38	118
	39	53
	40	92
	41	5
	57	57
	60	22
	61	27
	81	40
	93	26
	95	17
	98	31
	103	17
	106	31
	109	6
	117	42
	119	69
	126	48

STOCK NUMBER	FIG.	ITEM
	130	5
	132	15
	133	55
	136	18
	139	22
	141	43
	146	15
	154	18
	166	6
	168	3
	173	49
	179	22
	181	31
	182	6
	184	74
	185	109
	188	3
	189	3
	197	2
	198	2
	199	27
	220	1
	223	7
	227	16
[redacted]	[redacted]	[redacted]
[redacted]	[redacted]	[redacted]
[redacted]	[redacted]	[redacted]
[redacted]	[redacted]	[redacted]
	270	6
	270	43
[redacted]	[redacted]	[redacted]
	300	11
5306-00-068-0513	98	4
	106	4
	119	2
5305-00-068-0515	81	6
	98	19
	106	17
	117	5
	118	12
	126	4
5305-00-068-0516	59	85
5320-00-068-3265	113	13
5305-00-068-5276	260	1
5305-00-068-5405	130	11
5305-00-068-5415	249	3
5305-00-068-7837	18	9
	25	83
	27	4
	28	4
	39	36
	40	10
	94	83
	95	46
	96	17
	99	17
	102	45
	103	45
	104	17
	107	18
	109	65
	110	54
	110	62
	127	89
	138	8
	144	11

STOCK NUMBER	FIG.	ITEM
	157	32
	171	6
	184	7
	185	7
	191	1
	223	13
	227	7
	[redacted]	[redacted]
	270	33
	274	37
	[redacted]	[redacted]
	[redacted]	[redacted]
5305-00-068-8431	172	17
5310-00-069-5291	75	13
	[redacted]	[redacted]
	[redacted]	[redacted]
6210-00-070-2180	155	23
5305-00-071-1783	20	37
5305-00-071-1786	138	44
5305-00-071-1788	62	29
	138	14
5305-00-071-2056	138	28
5305-00-071-2067	25	45
	34	10
	58	19
	93	6
	109	34
	118	20
	119	51
	130	37
	184	52
	185	59
	[redacted]	[redacted]

STOCK NUMBER	FIG.	ITEM
5305-00-071-2068	20	10
	222	7
	[redacted]	[redacted]
5305-00-071-2069	25	140
	31	15
	38	74
	39	16
	41	19
	57	95
	132	27
	133	28
	173	28
	184	64
	[redacted]	[redacted]
	[redacted]	[redacted]
	[redacted]	[redacted]
	[redacted]	[redacted]
5305-00-071-2070	20	4
	20	4
	23	5
	25	39
	31	6
	38	7
	41	21
	57	32
	132	32
	133	32
	158	5
	159	5
	182	43
	184	27
	184	27
	185	27

STOCK NUMBER	FIG.	ITEM
	185	27
	[redacted]	[redacted]
	296	13
5305-00-071-2071	20	5
	25	31
	55	20
	127	24
	132	58
	133	75
	158	27
	159	24
	165	1
	173	21
	178	17
	179	12
	181	15
	184	22
	185	22
	190	18
	222	6
	224	13
	253	5
	296	23
	326	7
5305-00-071-2072	20	32
	25	48
	31	14
	41	2
	58	51
	62	306
	132	63
	133	80
	157	4
	158	12
	159	12
	177	3
	184	82
	185	68
5305-00-071-2073	31	8
	57	25
	58	30
	181	24
	184	38
	185	46
	206	9
	[redacted]	[redacted]
	290	7
	[redacted]	[redacted]
	[redacted]	[redacted]
5305-00-071-2074	25	33
	30	7
	39	1
	184	16
	185	33
	193	32
	194	35
	[redacted]	[redacted]
5305-00-071-2075	20	9
	98	42
	106	42
	184	105
	185	16
	261	33
	296	3
5305-00-071-2076	29	68
	157	23

STOCK NUMBER	FIG.	ITEM
	158	45
	159	44
	162	53
	184	91
	185	107
	193	31
	194	34
5305-00-071-2077	20	23
	184	101
	185	118
	193	38
	194	41
	320	4
5305-00-071-2078	130	29
5305-00-071-2079	130	36
5305-00-071-2081	157	31
	172	76
5305-00-071-2084	40	13
5305-00-071-2505	27	17
	28	17
	61	32
	65	26
	70	1
	98	29
	106	28
	118	49
	127	63
	133	3
	146	6
	162	39
	172	22
	187	36
	226	10

STOCK NUMBER	FIG.	ITEM
	257	10
	[redacted]	[redacted]
	[redacted]	[redacted]
	271	9
	274	4
	275	5
	[redacted]	[redacted]
	[redacted]	[redacted]
	[redacted]	[redacted]
	[redacted]	[redacted]
	315	3
5305-00-071-2506	15	50
	21	13
	106	66
	162	40
	172	24
	191	12
	201	10
	213	11
	227	22
	228	2
	232	1
	242	5
	[redacted]	[redacted]
	[redacted]	[redacted]
	270	7
	271	1
	272	53
	274	1
	275	1
	276	8
	[redacted]	[redacted]
	278	51

STOCK NUMBER	FIG.	ITEM
	282	11
	[redacted]	[redacted]
5305-00-071-2508	98	58
	99	36
	106	66
	107	36
	179	52
	261	14
	268	31
	272	64
	326	16
5305-00-071-2509	123	4
	129	16
	261	17
	268	32
	300	40
	[redacted]	[redacted]
5305-00-071-2510	15	51
	58	40
	138	52
	191	20
	300	42
5305-00-071-2511	133	58
	172	7
	300	39
5305-00-071-2512	155	13
	236	1
5305-00-071-2513	172	13
5305-00-071-2515	94	30
	102	29
	271	27
	275	31
5340-00-071-9740	162	18
5342-00-072-0218	191	21
2940-00-073-3316	76	2
5975-00-074-2072	96	43
	99	33
	104	43
	105	23
	107	19
5325-00-074-3301	95	93
	103	30
	110	61
5315-00-075-3010	38	13
5365-00-075-9138	127	26
	162	36
5305-00-078-0244	238	62
5340-00-078-3614	154	4
5325-00-078-6219	255	16
5120-00-079-4602	305	97
5305-00-079-7370	240	10
5315-00-080-1934	129	58
5315-00-080-1936	129	24
5315-00-080-1939	39	56
	40	53
5315-00-080-1941	237	18
	238	38
	255	71
6240-00-080-2012	112	10
5315-00-080-2976	92	2
5310-00-080-6004	12	2
	15	26
	18	18
	19	3
	22	11
	25	8

STOCK NUMBER	FIG.	ITEM
	27	2
	28	2
	29	74
	30	27
	31	23
	38	61
	39	27
	40	4
	41	16
	55	13
	57	58
	59	28
	60	4
	61	14
	62	44
	81	11
	82	16
	95	66
	96	46
	97	15
	98	9
	100	30
	103	64
	104	46
	105	11
	106	9
	108	28
	117	44
	118	5
	120	7
	126	15
	127	48
	129	41
	135	8
	137	19
	139	23
	141	9
	146	14
	154	17
	161	3
	178	6
	179	1
	184	62
	185	70
	186	15
	187	11
	188	4
	190	38
	199	26
	206	5
	207	2
	212	3
	224	2
	227	36
	228	9
	229	7
	232	18
	233	3
	[redacted]	[redacted]
	[redacted]	[redacted]
	271	74
	275	77
	[redacted]	[redacted]
	326	13
5995-00-080-7094	95	5
	103	5

STOCK NUMBER	FIG.	ITEM
5310-00-080-9786	59	32
	149	7
	210	6
	275	43
5310-00-081-4219	38	31
	59	35
	95	2
	99	3
	103	2
	107	3
	113	9
	126	11
	137	10
	233	6
	268	13
	[redacted]	[redacted]
	275	23
	276	14
	[redacted]	[redacted]
	[redacted]	[redacted]
	326	19
5305-00-081-6730	39	78
	40	91
5315-00-081-7015	218	22
5315-00-081-7019	231	2
5315-00-081-7020	218	25
5315-00-081-7042	199	21
5315-00-081-7874	126	25
5315-00-081-7875	161	27
	181	55
5310-00-081-8087	94	87
	96	41
	102	49

STOCK NUMBER	FIG.	ITEM
	104	41
5331-00-081-9299	62	253
3120-00-082-0240	62	103
3120-00-082-0241	62	105
5310-00-082-0650	275	45
5365-00-082-1193	62	126
5310-00-082-1404	[redacted]	[redacted]
5310-00-082-1888	62	254
5305-00-082-6721	2	20
5340-00-084-7787	62	252
2815-00-084-7796	62	132
5305-00-085-3224	61	26
5975-00-087-2726	311	9
5310-00-087-4652	12	7
	19	4
	25	57
	27	1
	28	1
	29	72
	39	70
	40	67
	59	45
	94	69
	98	36
	102	71
	106	45
	123	19
	126	49
	137	6
	139	19
	145	13
	161	22
	168	4

STOCK NUMBER	FIG.	ITEM
	171	17
	188	1
	199	28
	224	10
	232	20
	[redacted]	[redacted]
	[redacted]	[redacted]
5340-00-087-7486	62	201
5310-00-087-7493	38	2
	99	52
	107	57
	274	44
5310-00-088-1251	12	9
	27	13
	28	13
	29	81
	39	24
	40	48
	57	112
	59	24
	81	39
	94	68
	95	42
	98	59
	99	13
	102	76
	103	41
	106	67
	107	14
	109	61
	126	35
	127	68
	129	19

STOCK NUMBER	FIG.	ITEM
	133	36
	146	33
	161	8
	162	27
	168	9
	170	9
	171	4
	183	6
	184	68
	185	78
	187	32
	199	4
	200	5
	226	1
	243	19
	257	24
	[redacted]	[redacted]
	[redacted]	[redacted]
	270	15
	271	81
	274	17
	275	83
	[redacted]	[redacted]
	[redacted]	[redacted]
	[redacted]	[redacted]
5340-00-088-1254	272	56
	278	53
	300	29
5970-00-089-6041	241	47
5310-00-096-9728	247	6
3110-00-100-4471	46	7
	51	7
3110-00-100-6151	26	8

STOCK NUMBER	FIG.	ITEM
5305-00-101-8601	235	46
4730-00-102-9812	16	7
5120-00-103-4687	305	57
5120-00-104-1795	319	47
3110-00-107-7551	73	27
3110-00-107-7575	223	18
3110-00-108-9178	243	22
5935-00-109-0150	311	12
5120-00-113-5271	319	42
5940-00-113-8190	75	10
5342-00-113-9368	127	108
4820-00-114-1096	247	15
5120-00-116-7604	305	52
5320-00-117-6382	152	4
5320-00-118-1995	7	1
5340-00-119-1757	59	87
4730-00-125-2715	60	10
5120-00-126-0860	305	4
5330-00-132-0246	62	296
5330-00-132-0276	62	89
5120-00-132-6913	305	1
5935-00-133-0395	311	13
4730-00-133-3196	60	35
	117	33
6650-00-133-7743	305	103
5310-00-134-4169	62	56
5310-00-134-4171	62	37
5305-00-135-5056	172	64
4730-00-137-9239	134	16
5310-00-140-0558	226	20
5310-00-140-2135	142	22
	143	22
5310-00-140-4894	149	4
5310-00-141-1795	33	4
	62	270
	63	5
	146	55
	210	25
	231	7
	275	61
4730-00-143-3941	25	81
	58	16
	154	77
5940-00-143-4774	147	14
5940-00-143-4775	147	13
5940-00-143-4793	75	11
5310-00-143-6394	25	29
	25	49
	29	3
	30	15
	38	57
	41	22
	184	23
	184	23
	185	23
	185	23
	193	33
	194	36
4210-00-146-2963	127	1
5310-00-146-7102	95	53
	103	53
	109	71
	110	42
6130-00-148-1796	325	12
5310-00-149-9116	177	2
	232	8

STOCK NUMBER	FIG.	ITEM
	253	4
5310-00-149-9130	90	2
	[redacted]	[redacted]
	314	12
5310-00-149-9146	83	7
	220	2
	223	9
	257	39
	[redacted]	[redacted]
	[redacted]	[redacted]
	272	69
	[redacted]	[redacted]
	278	67
5306-00-150-3075	305	94
5305-00-150-3351	42	25
	43	32
	44	32
5330-00-150-3393	94	40
	102	40
5310-00-150-3889	221	9
4910-00-150-5805	305	53
4910-00-150-5848	319	45
5305-00-150-9675	38	69
6210-00-151-5358	112	11
5360-00-151-5900	137	26
5340-00-151-9651	141	37
	144	8
2910-00-152-2033	KITS	5
5305-00-152-6387	94	48
	98	11
	102	63
	106	11
5310-00-153-8760	58	47
5305-00-155-5329	94	47
	95	34
	96	9
	97	13
	98	13
	99	40
	100	5
	102	59
	103	32
	104	9
	105	21
	106	13
	107	40
	108	5
	109	48
6240-00-155-7784	94	22
	102	22
6240-00-155-8714	94	33
	102	33
	155	24
	271	17
	275	18
5975-00-156-3253	25	59
	59	78
	60	57
	95	52
	96	13
	100	7
	103	50
	104	13
	106	29
	107	37
	108	7

STOCK NUMBER	FIG.	ITEM
	109	13
	109	70
	110	1
	145	25
	154	70
	162	61
	210	15
	[redacted]	[redacted]
	270	38
	272	32
	[redacted]	[redacted]
	274	41
	[redacted]	[redacted]
	278	40
	[redacted]	[redacted]
	[redacted]	[redacted]
	[redacted]	[redacted]
	[redacted]	[redacted]
	300	65
	[redacted]	[redacted]
5120-00-157-3138	305	23
5310-00-159-1577	118	56
5331-00-159-3469	115	5
5315-00-159-3730	326	15
5306-00-159-5362	15	27
5310-00-159-6209	62	272
	63	13
5310-00-159-6495	73	85
	86	45
7690-00-161-7771	168	1
5365-00-162-6058	15	6
4730-00-163-0236	61	21
5306-00-163-2849	58	48
5306-00-163-2850	96	44
	97	17
	104	44
	105	9
5306-00-163-6585	62	232
4720-00-165-4737	154	67
5310-00-165-8353	55	21
5320-00-165-8776	153	5
	153	15
5331-00-166-0990	58	3
5331-00-166-0993	58	10
5331-00-166-1049	73	78
	86	38
5331-00-166-1086	65	6
	71	4
5331-00-166-8396	73	82
	86	47
5331-00-166-8399	73	56
	86	36
5310-00-167-0721	99	16
	[redacted]	[redacted]
5310-00-167-0768	98	26
	106	25
5310-00-167-0770	57	1
	132	73
	133	111
[redacted]	[redacted]	[redacted]
5310-00-167-0804	100	30
	108	28
	109	3
	193	16
	194	19
	235	72

STOCK NUMBER	FIG.	ITEM
	[redacted]	[redacted]
5310-00-167-0806	133	19
5310-00-167-0818	27	54
	28	59
	33	2
	99	44
	107	44
	147	10
5310-00-167-0820	58	42
	126	22
	129	34
5310-00-167-0821	22	6
	84	14
	123	3
	141	42
	[redacted]	[redacted]
5310-00-167-0823	57	97
	123	43
	129	66
	132	29
5310-00-167-0828	38	53
	123	33
5310-00-167-0837	137	27
	146	56
	161	18
5310-00-167-0838	126	56
	129	27
[redacted]	[redacted]	[redacted]
5310-00-167-0841	132	49
5310-00-167-0843	25	2
5310-00-167-1289	73	62
	86	17
5331-00-167-5114	73	67
	86	22
5331-00-167-5116	73	100
5331-00-167-5118	73	95
5331-00-167-5125	75	15
5331-00-167-5135	73	88
	86	42
5331-00-167-5173	65	5
	71	3
5935-00-167-7775	163	4
5360-00-168-4560	231	8
5331-00-168-5377	65	18
5305-00-170-3778	94	37
	96	5
	102	37
	104	5
5325-00-171-4688	96	4
	104	4
4730-00-172-0034	307	1
5331-00-172-6348	90	31
4730-00-173-1881	61	9
5325-00-174-2882	178	18
	179	8
5325-00-174-9328	95	32
	103	35
	109	52
5325-00-174-9332	94	73
5325-00-174-9341	94	61
5310-00-175-2710	42	5
	43	5
	44	5
6210-00-176-4955	112	6
5310-00-176-6267	15	30
4720-00-177-0671	BULK	10

STOCK NUMBER	FIG.	ITEM
5340-00-177-3735	272	63
	278	63
6145-00-177-4607	192	5
	BULK	55
5305-00-177-5552	62	43
5305-00-177-5601	223	27
3040-00-177-7866	201	17
5365-00-177-8310	201	5
6220-00-179-4324	111	1
6220-00-179-4325	116	1
5310-00-180-0277	100	29
	108	27
	109	4
	119	79
	121	8
	170	15
5306-00-182-1799	243	15
5306-00-182-2005	147	9
5305-00-182-9379	255	26
5340-00-182-9631	165	11
5935-00-184-6707	163	3
5310-00-184-8628	123	28
5310-00-184-9562	99	50
	[redacted]	[redacted]
4030-00-185-0489	305	84
	318	1
5310-00-185-6426	73	84
	86	46
5310-00-186-0982	90	33
5305-00-186-6084	137	12
5310-00-187-2329	31	46
5315-00-187-9370	226	21
5315-00-187-9377	190	45
5360-00-187-9736	249	12
5305-00-187-9934	31	21
4730-00-188-3514	57	87
4720-00-189-2777	BULK	18
5970-00-189-5850	235	21
	237	72
[redacted]	[redacted]	[redacted]
4730-00-194-1075	162	62
5310-00-194-1483	118	9
	190	17
	[redacted]	[redacted]
5310-00-194-9213	186	17
5330-00-196-6708	60	78
5330-00-197-2966	58	9
5365-00-197-9327	62	159
3110-00-198-1085	324	2
5325-00-200-2637	241	26
5340-00-200-3045	25	117
	59	30
	141	22
	162	49
	210	14
	210	30
5342-00-200-7566	99	21
	107	30
5340-00-200-8560	94	44
	98	14
	99	46
	100	18
	102	73
	106	14
	107	46
	107	47

STOCK NUMBER	FIG.	ITEM
	108	19
5325-00-202-1604	117	21
5325-00-202-4005	97	12
	105	27
4730-00-204-1272	59	83
5310-00-205-3026	125	1
5310-00-205-8249	84	20
	85	18
5305-00-206-4527	62	298
5305-00-207-2715	63	7
5305-00-207-8253	81	9
5310-00-208-1918	118	44
5310-00-208-6740	229	12
5310-00-208-9255	195	1
	196	1
5310-00-209-0026	95	72
	103	73
	213	25
5310-00-209-0027	73	37
	242	4
5310-00-209-0295	59	12
	73	64
	86	19
5310-00-209-0786	[redacted]	[redacted]
	[redacted]	[redacted]
5310-00-209-0788	155	26
5310-00-209-0790	172	78
	[redacted]	[redacted]
	[redacted]	[redacted]
	[redacted]	[redacted]
5310-00-209-0965	59	3
	60	69
	115	17
	131	19
	158	36
	159	36
5310-00-209-1239	25	98
	235	32
	237	62
5310-00-209-3567	115	15
5310-00-209-5116	94	20
	102	20
5340-00-209-9281	29	76
6145-00-220-9660	241	20
3940-00-221-1911	305	86
5210-00-221-1934	319	72
4730-00-221-2136	59	77
4730-00-221-2137	73	75
4730-00-221-2141	210	18
4730-00-223-9268	57	98
5330-00-224-2049	90	15
5340-00-225-2875	82	14
5305-00-225-3841	155	12
	193	2
	194	2
	209	22
	243	21
	[redacted]	[redacted]
	271	69
	275	71
	300	26
5305-00-225-3842	29	16
	117	75
	130	21
	172	44
	184	66

STOCK NUMBER	FIG.	ITEM
	185	76
	211	20
	243	32
	[redacted]	[redacted]
	[redacted]	[redacted]
	270	29
	274	31
	[redacted]	[redacted]
	278	54
	300	45
	[redacted]	[redacted]
5305-00-225-3843	12	4
	25	74
	27	11
	28	11
	57	101
	59	26
	65	33
	94	51
	95	75
	102	53
	103	76
	106	63
	126	33
	127	80
	129	23
	133	97
	154	63
	155	14
	162	43
	173	6
	178	2
	179	14
	183	9
	190	7
	197	4
	198	4
	210	24
	227	21
	232	9
	243	27
	257	25
	[redacted]	[redacted]
	[redacted]	[redacted]
	268	5
	[redacted]	[redacted]
	276	5
	[redacted]	[redacted]
	300	20
	[redacted]	[redacted]
5305-00-225-3844	155	29
	158	3
	159	3
	282	15
5310-00-225-5328	246	18
	251	20
5310-00-225-6992	15	15
5310-00-225-6993	57	38
	58	50
	129	29
	193	35
	194	38
	224	17
	261	21
	[redacted]	[redacted]
5305-00-225-7773	75	4

STOCK NUMBER	FIG.	ITEM
5305-00-225-7775	253	7
5310-00-225-8327	84	21
	85	19
5305-00-225-9081	62	273
5306-00-226-4825	113	10
	[redacted]	[redacted]
	[redacted]	[redacted]
5306-00-226-4826	38	109
	99	1
	107	1
	127	101
	200	20
	[redacted]	[redacted]
	[redacted]	[redacted]
5306-00-226-4827	38	30
	268	12
	271	50
	275	52
	276	13
5306-00-226-4828	110	8
5306-00-226-4829	127	54
	127	119
	138	21
	200	15
	233	10
5306-00-226-4830	179	40
	274	45
5305-00-226-4831	138	5
	200	15
	[redacted]	[redacted]
5306-00-226-4832	58	37
	110	5
	126	24

STOCK NUMBER	FIG.	ITEM
[redacted]	[redacted]	[redacted]
	[redacted]	[redacted]
5306-00-226-4835	58	14
5306-00-226-4837	110	2
5306-00-226-4843	73	31
5310-00-226-5977	221	8
3110-00-227-2338	53	7
3110-00-227-3246	73	29
	86	10
5120-00-227-8104	305	5
5310-00-228-2791	73	33
9535-00-228-3137	BULK	46
2540-00-228-7795	168	2
4730-00-231-1330	127	3
3120-00-234-0183	201	14
5315-00-234-1626	[redacted]	[redacted]
	[redacted]	[redacted]
5315-00-234-1848	16	6
5315-00-234-1854	132	37
	133	23
5315-00-234-1863	326	14
5315-00-234-1864	133	15
	200	31
2540-00-234-3503	201	19
4720-00-235-3887	132	90
5340-00-235-4432	130	18
	165	15
5340-00-235-4434	165	13
5315-00-236-8359	73	63
	86	18
	154	5
5315-00-236-8370	25	148
5315-00-236-8371	38	54

STOCK NUMBER	FIG.	ITEM
2540-00-237-3693	16	1
5120-00-237-6995	305	12
4910-00-238-9957	319	43
5325-00-241-0447	238	56
5310-00-241-6604	236	23
5315-00-241-7332	38	10
	125	11
	132	57
	133	74
5305-00-242-7275	241	5
5999-00-243-6500	235	79
	235	99
	237	33
	256	2
5310-00-245-3419	235	53
5331-00-250-0226	25	3
5310-00-250-9477	133	95
	[redacted]	[redacted]
	[redacted]	[redacted]
5331-00-251-8839	55	5
5331-00-251-9371	14	10
5310-00-252-8748	99	51
3110-00-252-9620	235	106
5305-00-253-5603	73	98
	84	1
	86	48
	90	27
5305-00-253-5604	75	21
	85	2
5305-00-253-5605	60	25
	177	7
5305-00-253-5606	78	11
5305-00-253-5612	218	17
5305-00-253-5620	24	2
	177	17
6210-00-256-6333	112	17
5340-00-257-3768	234	2
	236	8
	237	20
5310-00-261-7340	62	18
5310-00-262-5312	151	3
	153	21
5325-00-263-5907	238	18
5331-00-263-8030	117	6
	154	71
5331-00-263-8031	63	8
5331-00-263-8032	60	39
5331-00-263-8033	117	14
6145-00-264-6277	311	8
6150-00-265-6451	155	27
5305-00-267-8950	139	3
	140	3
5305-00-267-8952	119	26
	232	22
	271	35
	275	38
5305-00-267-8953	96	36
	104	36
5305-00-267-8958	73	8
5310-00-268-7313	225	10
5305-00-269-3236	127	97
	206	4
	228	18
	232	17
5305-00-269-3237	227	42
5305-00-269-3238	38	132

STOCK NUMBER	FIG.	ITEM
	84	15
5305-00-269-3240	135	9
5305-00-269-3244	129	50
5305-00-269-3246	227	26
5305-00-269-3248	126	16
	224	9
4730-00-269-3760	210	10
5310-00-269-4040	17	11
	57	41
	58	26
5310-00-269-5970	62	329
4030-00-270-5436	14	8
	21	7
	[redacted]	[redacted]
	[redacted]	[redacted]
5310-00-271-7454	300	35
5310-00-274-8715	185	92
5310-00-275-9211	253	2
5310-00-275-9310	[redacted]	[redacted]
	[redacted]	[redacted]
5325-00-276-6056	95	31
	103	33
	109	49
1640-00-277-1126	229	9
4730-00-277-6204	57	27
	117	28
	119	36
4730-00-277-6324	38	47
4720-00-278-1108	BULK	20
4730-00-278-2965	52	7
	53	16
	55	10
4730-00-278-3462	86	15

STOCK NUMBER	FIG.	ITEM
4730-00-278-3905	60	13
4730-00-278-5000	61	35
4720-00-279-0093	162	69
	210	11
4720-00-279-0094	162	70
5325-00-282-1601	73	14
5325-00-282-6957	139	25
	140	13
5365-00-282-7000	38	5
5325-00-282-7120	145	26
	255	75
5940-00-283-5280	311	16
5310-00-285-1540	25	85
5310-00-285-8124	173	8
	271	8
	275	4
5340-00-286-9416	81	32
5340-00-286-9418	57	48
	59	21
	60	8
	95	51
	97	14
	100	27
	103	31
	105	26
	108	17
	109	47
5340-00-286-9421	95	25
	103	24
5340-00-286-9424	60	7
	97	36
	100	17
	105	41

STOCK NUMBER	FIG.	ITEM
	108	16
5340-00-286-9427	60	1
	95	24
	96	49
	98	12
	99	39
	100	34
	103	25
	104	49
	106	12
	107	39
	108	34
	109	44
4730-00-287-0289	127	11
4730-00-289-0383	60	61
5331-00-290-9486	62	76
5331-00-291-3272	119	6
5340-00-291-5322	96	47
	97	10
	99	32
	104	47
	105	20
	107	22
5340-00-291-5323	25	136
	59	61
	60	64
	95	8
	96	12
	100	36
	103	8
	104	12
	108	33
	127	38
5340-00-291-5347	94	50
	96	10
	98	15
	99	34
	100	32
	102	74
	104	10
	106	15
	107	20
	108	30
[redacted]	[redacted]	[redacted]
	[redacted]	[redacted]
5325-00-291-9366	94	59
	102	61
5330-00-292-0035	118	35
	119	17
5120-00-293-1011	305	6
5120-00-293-2562	305	2
6240-00-295-2668	114	3
	280	3
5305-00-297-4005	241	3
5331-00-297-9986	235	63
5331-00-297-9990	96	28
	104	28
5315-00-298-1481	25	7
5315-00-298-1499	16	12
5310-00-298-8903	281	2
5310-00-304-9615	142	6
	143	6
5325-00-319-0547	33	12
5360-00-321-6184	29	71
5360-00-323-3092	243	8
4820-00-329-9667	132	93

STOCK NUMBER	FIG.	ITEM
	133	131
5331-00-330-3307	58	8
4730-00-331-4279	117	11
6220-00-337-7463	94	26
	102	25
5340-00-339-3768	290	1
	[redacted]	[redacted]
4910-00-345-3708	319	37
4730-00-350-4437	127	20
5340-00-351-4082	117	35
5210-00-351-9700	319	50
5340-00-355-9732	99	27
	107	7
4730-00-359-3103	57	17
2590-00-362-1548	62	57
6240-00-368-4972	115	20
5310-00-395-3602	18	12
	25	84
	27	36
	28	42
	106	68
	121	6
	179	15
	181	50
	300	19
5120-00-399-1154	305	26
5120-00-399-1157	305	25
5940-00-399-6676	281	3
5340-00-400-3449	62	184
5330-00-404-6295	26	12
5310-00-407-9566	59	36
	62	148
	98	25

STOCK NUMBER	FIG.	ITEM
	99	2
	106	24
	107	2
	[redacted]	[redacted]
	[redacted]	[redacted]
	[redacted]	[redacted]
5325-00-409-5362	117	68
5305-00-410-2903	174	11
[redacted]	[redacted]	[redacted]
5331-00-410-4887	134	53
5305-00-410-6070	62	305
4730-00-411-9477	73	96
5340-00-417-4941	95	64
	103	63
	109	51
5340-00-417-5800	62	153
5331-00-420-7590	234	6
	236	28
	254	3
5935-00-421-1669	115	6
6220-00-421-1671	115	19
5325-00-421-4945	238	40
2590-00-421-9524	62	58
4730-00-425-5430	62	176
5310-00-426-3990	62	91
5315-00-429-1154	205	12
2910-00-432-1945	62	262
5325-00-432-3584	237	48
5305-00-432-3755	42	27
	43	39
	44	39
4730-00-433-3438	117	30
	118	66

STOCK NUMBER	FIG.	ITEM
5310-00-433-3599	174	12
5310-00-435-0674	20	3
	31	5
	81	43
	157	3
	158	4
	159	4
	184	92
	185	108
	193	36
	194	39
	[redacted]	[redacted]
5310-00-436-3290	14	3
	234	15
6680-00-436-4212	325	4
5310-00-444-7974	123	27
5210-00-449-7014	319	77
8315-00-450-9837	BULK	2
2520-00-451-1792	55	22
2520-00-451-1793	55	24
5975-00-451-5001	60	56
	99	37
	100	22
	108	15
	108	23
	126	6
	132	97
	133	103
	162	58
	173	35
	268	11
	[redacted]	[redacted]
	270	1
	272	57
	274	24
	276	12
	[redacted]	[redacted]
	278	18
	[redacted]	[redacted]
	300	66
5305-00-453-5584	12	19
5305-00-455-2507	241	53
5305-00-455-2550	174	1
5305-00-456-0001	199	33
5305-00-456-6757	227	39
5210-00-459-8871	319	69
5331-00-459-9469	134	4
5310-00-460-4702	42	28
	43	40
	44	40
5331-00-462-0907	111	2
5975-00-462-2911	142	19
	143	19
5935-00-462-6603	163	2
5331-00-463-0200	116	2
5340-00-464-4792	247	5
5325-00-465-8927	235	69
5640-00-469-7723	BULK	22
5310-00-470-3000	138	7
5305-00-470-5475	119	42
5310-00-472-7194	62	240
5120-00-473-7013	305	68
5120-00-473-7017	305	61
5310-00-476-7440	64	5
5930-00-477-1116	59	58
5310-00-477-6768	2	51

STOCK NUMBER	FIG.	ITEM
	202	6
	218	19
4930-00-477-8276	60	53
5310-00-478-2942	138	4
5340-00-479-2947	158	20
	159	20
5340-00-479-2949	171	12
5305-00-480-8401	241	41
5306-00-483-8833	64	4
5310-00-484-1718	63	11
4730-00-484-3509	127	96
5210-00-484-5274	319	61
5305-00-486-1187	255	62
[redacted]	[redacted]	[redacted]
2520-00-488-9355	55	23
2815-00-490-3060	62	104
4730-00-491-4983	60	42
4730-00-491-9576	132	95
5360-00-492-9166	2	50
5305-00-493-3959	62	263
5305-00-494-7334	174	13
	241	60
5340-00-494-8238	165	12
5945-00-500-7195	95	91
	103	89
	110	55
5365-00-507-3271	63	3
3010-00-507-8347	62	267
5315-00-514-1353	15	53
5310-00-514-6674	271	51
	275	53
	[redacted]	[redacted]
5340-00-515-0595	268	10

STOCK NUMBER	FIG.	ITEM
	272	34
	276	11
	278	15
4730-00-516-3011	305	19
5340-00-521-4479	79	7
	88	3
5310-00-521-8595	62	152
5331-00-527-8116	119	7
5305-00-528-5147	238	42
	255	23
	[redacted]	[redacted]
	[redacted]	[redacted]
5325-00-530-7968	132	33
	133	4
5305-00-531-1097	323	2
[redacted]	[redacted]	[redacted]
5935-00-534-7556	311	5
4730-00-541-8297	162	20
4730-00-541-9081	117	13
5331-00-542-1586	25	78
1650-00-542-2060	134	61
4820-00-542-5683	305	39
4730-00-542-5906	25	156
5310-00-543-2009	168	10
	170	8
5310-00-543-2410	93	10
	300	32
5305-00-543-2419	21	9
	27	19
	28	20
	38	135
	82	7
	94	56

STOCK NUMBER	FIG.	ITEM
	102	54
	117	51
	118	6
	119	56
	126	40
	140	23
	154	51
	185	91
	187	13
	188	16
	190	41
	204	3
	233	7
	257	21
	[redacted]	[redacted]
	[redacted]	[redacted]
	[redacted]	[redacted]
	272	70
	278	53
	[redacted]	[redacted]
	[redacted]	[redacted]
5310-00-543-2740	81	8
	98	35
	106	35
	172	25
	173	40
	271	43
	282	12
	[redacted]	[redacted]
5305-00-543-2866	29	78
	34	11
	38	40
5340-00-543-3155	157	5
5340-00-543-3173	157	20
	158	41
	159	45
5340-00-543-3188	166	2
5340-00-543-3321	166	3
	171	13
	171	21
	172	81
	173	32
	193	44
	194	47
5340-00-543-3477	166	8
	168	7
5340-00-543-3557	159	29
5315-00-543-3986	247	12
5305-00-543-4372	2	7
	25	107
	27	29
	28	28
	29	50
	38	49
	39	26
	40	59
	52	6
	94	5
	102	5
	120	5
	121	9
	126	60
	141	44
	146	11
	154	1
	158	17

STOCK NUMBER	FIG.	ITEM
	159	18
	170	5
	178	7
	179	2
	181	41
	184	10
	185	12
	212	7
	[redacted]	[redacted]
	[redacted]	[redacted]
	[redacted]	[redacted]
	[redacted]	[redacted]
	300	60
5310-00-543-5933	118	54
	119	14
	133	62
	271	40
	282	12
5340-00-543-7110	166	7
5330-00-543-7160	115	2
5305-00-545-6646	255	9
4910-00-548-7984	305	50
5940-00-549-6581	95	27
	103	27
	109	16
	110	12
	[redacted]	[redacted]
	[redacted]	[redacted]
5940-00-549-6583	95	29
	103	29
	109	11
	110	10
	[redacted]	[redacted]

STOCK NUMBER	FIG.	ITEM
	[redacted]	[redacted]
5325-00-550-0476	81	33
5310-00-550-1130	27	8
	28	8
	94	29
	96	37
	97	23
	98	33
	99	14
	102	28
	104	38
	105	15
	106	33
	107	15
	117	76
	129	17
	134	9
	144	10
	146	2
	155	11
	157	33
	158	2
	159	2
	161	11
	162	8
	171	7
	183	3
	210	21
	211	31
	268	6
	[redacted]	[redacted]
	270	31
	271	2

STOCK NUMBER	FIG.	ITEM
	272	65
	274	34
	275	2
	276	6
	[redacted]	[redacted]
	278	55
	[redacted]	[redacted]
5310-00-550-5054	130	19
5310-00-551-8089	96	31
	125	2
5331-00-551-8441	78	6
2940-00-552-3842	61	23
3110-00-554-3197	73	6
3110-00-554-3244	73	44
6625-00-555-2256	95	36
	103	36
	109	55
5120-00-557-3615	305	20
6220-00-557-8229	115	3
5310-00-559-0070	96	20
	104	20
	104	31
	115	11
	155	19
	208	6
	209	6
	218	10
5325-00-559-8031	127	60
5310-00-562-2953	243	23
5310-00-562-6558	62	147
4240-00-565-6059	162	47
5210-00-567-9545	319	62
5975-00-570-9598	210	29
5310-00-572-0741	90	13
5935-00-572-9180	96	7
	104	7
	111	4
	116	4
	147	2
5360-00-574-0050	213	18
5305-00-576-5417	59	7
5310-00-576-5752	39	64
	40	61
	94	46
	96	15
	102	58
	104	15
	117	36
	118	13
	141	21
	154	30
	162	5
	173	31
	210	7
	268	25
	271	15
	275	16
	276	26
5305-00-577-5435	39	73
	40	70
6210-00-578-7970	163	1
5310-00-579-0079	99	20
	107	31
	282	7
	[redacted]	[redacted]
5331-00-579-6861	52	1

STOCK NUMBER	FIG.	ITEM
5331-00-579-7918	42	34
	43	36
	44	36
	57	100
5330-00-579-8156	15	39
	65	14
	142	16
	143	16
5340-00-579-9678	57	75
	268	8
	276	9
5331-00-579-9833	78	4
	134	60
4720-00-580-6944	BULK	9
5331-00-582-2133	134	71
5331-00-582-2855	134	19
5310-00-582-5677	93	16
	95	74
	98	28
	103	75
	106	27
	127	99
	133	2
	140	4
	172	23
	173	4
	190	1
	197	3
	198	3
	200	25
	218	30
	236	3
	238	14

STOCK NUMBER	FIG.	ITEM
	255	21
	[redacted]	[redacted]
	[redacted]	[redacted]
	[redacted]	[redacted]
	[redacted]	[redacted]
	[redacted]	[redacted]
	[redacted]	[redacted]
	324	10
5310-00-582-5965	18	13
	33	5
	57	89
	65	16
	65	27
	68	7
	69	2
	70	2
	93	17
	94	82
	95	89
	96	35
	98	55
	99	24
	102	44
	103	87
	104	35
	106	49
	107	10
	110	52
	127	125
	132	9
	142	9
	143	9
	154	62

STOCK NUMBER	FIG.	ITEM
	173	5
	208	2
	209	2
	233	13
	257	9
	[redacted]	[redacted]
	[redacted]	[redacted]
	[redacted]	[redacted]
	[redacted]	[redacted]
	[redacted]	[redacted]
	[redacted]	[redacted]
	268	3
	[redacted]	[redacted]
	270	13
	271	37
	274	5
	275	10
	276	3
	[redacted]	[redacted]
	[redacted]	[redacted]
	[redacted]	[redacted]
	[redacted]	[redacted]
5310-00-582-6058	127	77
5340-00-582-7354	146	28
5331-00-584-0265	235	103
	237	59
5331-00-584-0266	134	54
5331-00-584-1840	134	51
5310-00-584-5272	55	30
	57	96
	58	20
	59	8
	165	2

STOCK NUMBER	FIG.	ITEM
	261	22
	[redacted]	[redacted]
	[redacted]	[redacted]
5340-00-584-6556	59	52
5340-00-584-6560	59	22
5310-00-585-3243	235	59
5331-00-585-7723	78	7
5331-00-585-8249	53	4
5340-00-586-7579	157	6
5315-00-587-2705	132	35
	133	29
	138	23
5315-00-593-3038	25	145
4730-00-595-3931	128	2
5310-00-595-6057	93	5
	93	8
	93	23
	323	4
5310-00-595-6211	93	11
	235	77
	236	22
	237	31
	239	6
	240	11
	256	4
	260	3
5310-00-595-7044	97	37
	105	33
	281	5
5310-00-595-7237	2	3
	25	126
	32	4
	33	18

STOCK NUMBER	FIG.	ITEM
	35	5
	38	65
	39	25
	40	52
	59	46
	95	66
	96	45
	97	16
	100	29
	103	65
	104	45
	105	10
	108	27
	117	43
	118	40
	120	6
	123	14
	126	42
	129	6
	141	18
	146	10
	154	9
	161	20
	168	5
	218	20
	224	20
	[redacted]	[redacted]
	312	5
5365-00-595-9726	18	6
5310-00-596-1766	221	6
	223	14
5120-00-596-6235	305	85
5310-00-596-7599	271	5
	275	8
5310-00-596-8401	15	19
5340-00-597-0182	192	4
5360-00-597-4570	63	2
5340-00-598-0146	59	50
	99	42
	100	26
	107	42
5325-00-598-1138	145	10
	246	3
	249	18
5325-00-598-1774	235	26
5325-00-598-1785	238	73
5325-00-598-5588	18	7
5325-00-598-6274	75	41
5331-00-599-2934	307	3
5305-00-604-0041	213	2
4730-00-606-1989	60	30
5315-00-614-3586	235	94
	237	23
	255	87
5310-00-615-1556	27	44
	28	50
	59	69
	202	14
5310-00-616-3555	172	29
	173	54
5315-00-616-5514	238	24
5315-00-616-5516	143	28
5315-00-616-5522	123	25
	124	4
5315-00-616-5524	15	31
5315-00-616-5529	132	42

STOCK NUMBER	FIG.	ITEM
	133	35
5310-00-616-7998	96	26
	104	26
5310-00-616-8660	112	16
5930-00-617-9718	271	30
	275	34
5331-00-618-0799	78	12
5331-00-618-0801	115	8
5331-00-618-1665	238	36
5331-00-618-1920	78	22
4730-00-618-4283	154	57
4730-00-618-5370	25	55
	60	36
4730-00-618-5372	25	114
	127	35
	132	96
4730-00-618-5381	133	98
5310-00-619-1148	133	63
	160	9
	162	56
	172	2
	234	9
	235	114
	236	7
	237	15
	238	31
	254	7
	255	8
5355-00-619-4669	127	44
5310-00-627-6128	127	98
	274	48
5315-00-628-4001	55	17
4730-00-629-0868	133	127
5930-00-630-2202	241	38
5305-00-630-3103	25	95
5331-00-631-1341	78	16
5325-00-634-7446	235	8
	238	28
	255	82
5310-00-638-2605	127	7
5310-00-638-8146	201	3
5305-00-638-8920	60	3
	154	53
	172	63
	184	56
	185	63
	212	8
	[redacted]	[redacted]
	300	7
	[redacted]	[redacted]
4730-00-640-0279	13	2
4730-00-640-5852	162	22
5331-00-641-3407	15	38
6145-00-643-4760	311	7
5305-00-646-7389	59	10
4730-00-647-3207	25	61
	60	12
5310-00-655-6151	172	14
5310-00-655-9668	52	5
	181	2
5310-00-655-9669	226	9
5305-00-655-9711	75	30
5305-00-656-0230	62	233
5305-00-660-2625	311	10
5975-00-660-5962	94	2
	102	2

STOCK NUMBER	FIG.	ITEM
5945-00-660-9315	95	87
	103	85
	110	50
5325-00-663-2412	255	18
5340-00-664-0364	158	42
	159	42
	193	6
	194	6
5360-00-664-5343	62	160
5340-00-664-8163	100	24
	108	25
	190	34
5340-00-664-8164	60	18
5340-00-664-8188	61	17
	96	11
	100	6
	104	11
	108	6
5935-00-666-4876	108	54
6210-00-678-5916	112	9
5340-00-678-9031	157	9
7690-00-679-5749	170	13
2530-00-679-7961	50	1
4730-00-679-7997	141	27
2540-00-679-8046	15	32
5360-00-679-9190	182	47
5340-00-679-9211	39	9
	40	21
	182	15
5310-00-679-9814	46	6
	51	6
5310-00-682-5822	46	5
	51	5
6350-00-683-0598	102	83
5930-00-683-1628	311	17
5331-00-684-3419	78	13
5331-00-684-3420	78	18
	134	17
5310-00-684-3463	62	48
5315-00-687-5218	126	63
	238	60
	[redacted]	[redacted]
5305-00-688-2111	25	70
	129	42
	137	21
	173	15
	184	41
	185	49
	190	31
	200	28
	224	21
	227	35
	[redacted]	[redacted]
	[redacted]	[redacted]
	[redacted]	[redacted]
	300	15
5310-00-688-2195	324	12
5305-00-688-2350	115	14
2520-00-689-3402	25	108
2540-00-690-2114	201	13
5306-00-690-6976	95	67
	98	8
	100	28
	103	66
	106	8
	108	26

STOCK NUMBER	FIG.	ITEM
5331-00-691-0145	78	8
5315-00-693-0634	16	4
2590-00-695-9076	281	1
5935-00-695-9077	97	38
	105	32
	281	6
5305-00-701-5074	110	26
5305-00-701-5075	110	25
	110	34
5331-00-702-1048	235	55
5331-00-702-5220	47	3
	54	4
4030-00-702-8754	318	4
5360-00-704-4253	16	2
2590-00-707-7532	115	21
5120-00-708-2641	305	45
5310-00-708-7826	29	70
5360-00-709-5855	139	11
	140	35
	199	20
	200	10
5360-00-709-5866	201	16
4730-00-710-5571	117	15
5365-00-711-8099	141	38
5340-00-715-3854	157	11
	158	46
	168	12
5360-00-715-9282	181	63
	182	20
2815-00-716-6597	63	6
4730-00-718-2621	61	5
4730-00-719-2789	60	38
5340-00-719-4601	62	206
[redacted]	[redacted]	[redacted]
[redacted]	[redacted]	[redacted]
[redacted]	[redacted]	[redacted]
	[redacted]	[redacted]
5305-00-719-5219	57	51
5305-00-719-5221	57	68
5305-00-719-5240	132	18
	133	44
5305-00-719-5241	57	2
5305-00-719-5243	29	9
	57	86
5305-00-719-5262	23	2
5325-00-720-9232	235	68
5325-00-721-4828	243	33
5305-00-721-5492	32	5
	33	19
	38	133
	39	39
	40	41
	94	71
	95	79
	96	52
	103	80
	104	53
	110	40
	170	17
	178	8
	179	3
	185	86
	232	6
5310-00-721-8000	127	16
6150-00-722-5707	271	48
	275	50

STOCK NUMBER	FIG.	ITEM
5310-00-722-5998	249	17
	255	61
5305-00-724-5381	249	19
5305-00-724-5802	223	20
5305-00-724-5882	136	17
5305-00-724-5884	38	84
5305-00-724-6799	75	39
5305-00-724-7208	30	39
5305-00-724-7219	60	49
5305-00-724-7220	29	33
	30	36
	189	9
	190	25
5305-00-724-7221	29	41
	30	32
	39	7
	42	14
	43	14
	44	14
	253	3
5305-00-724-7222	17	6
	25	41
	29	38
	30	18
	34	3
	40	28
	42	8
	55	3
	[redacted]	[redacted]
5305-00-724-7223	25	18
	57	47
	209	17
5305-00-724-7224	25	15
	58	24
	185	10
	261	28
5305-00-724-7225	29	20
	43	50
	44	48
5305-00-724-7228	18	16
	25	13
	43	8
	44	8
	209	16
	320	7
5305-00-724-7236	25	19
	42	9
	43	52
	44	50
5305-00-724-7247	29	19
5305-00-724-7248	25	21
	42	37
5305-00-724-7263	31	48
	43	23
	44	23
5305-00-724-7265	43	51
	44	49
5305-00-724-7266	29	32
	43	9
	44	9
5305-00-725-0154	55	31
5305-00-725-0166	29	40
	30	31
5325-00-725-0969	138	58
	245	4
6150-00-725-1187	106	69

STOCK NUMBER	FIG.	ITEM
5305-00-725-2317	25	9
	30	4
	39	29
	40	6
	41	15
	46	1
	51	1
	52	24
	53	1
	58	18
	83	3
	118	29
	119	72
	126	61
	127	13
	129	4
	130	14
	136	12
	146	13
	154	44
	161	21
	172	58
	173	48
	179	24
	182	51
	185	97
	188	6
	194	13
	211	11
	224	1
	243	3
	[redacted]	[redacted]
	[redacted]	[redacted]

STOCK NUMBER	FIG.	ITEM
	[redacted]	[redacted]
	[redacted]	[redacted]
	[redacted]	[redacted]
	296	17
	300	5
	[redacted]	[redacted]
	320	5
7690-00-725-5298	171	9
5305-00-726-1241	235	76
	237	30
	256	3
5305-00-726-2543	49	9
5305-00-726-2550	42	12
	227	55
5305-00-726-2556	57	43
5975-00-727-5153	75	8
	226	17
	300	68
5310-00-727-5223	2	22
5306-00-727-6788	243	5
4730-00-727-9795	132	92
	133	130
5310-00-728-9957	22	12
	25	71
	29	48
	38	48
	40	7
	109	38
	129	2
	132	44
	133	31
	135	2
	136	8

STOCK NUMBER	FIG.	ITEM
	145	12
	146	20
	154	42
	158	16
	159	17
	161	16
	173	44
	177	9
	181	11
	181	11
	182	5
	184	34
	185	42
	190	40
	194	9
	197	8
	198	9
	227	49
	233	19
5315-00-729-6988	73	77
	86	32
5315-00-730-4451	235	25
5315-00-730-4455	235	74
5315-00-730-4456	255	95
5315-00-730-4609	238	7
5305-00-732-0511	25	30
	29	2
	53	26
	94	13
	102	13
	184	53
	185	58
5310-00-732-0558	94	53
	102	52
5310-00-732-0559	127	93
6680-00-732-0561	96	29
	104	29
5315-00-732-0579	84	9
	85	10
2590-00-735-4063	96	6
	104	6
4730-00-735-7457	62	330
5945-00-735-9542	59	34
5940-00-738-6272	95	26
	103	26
	[redacted]	[redacted]
	[redacted]	[redacted]
5310-00-741-6862	95	16
	103	16
4820-00-752-9040	62	118
5325-00-753-3699	324	4
5340-00-753-3741	159	14
5340-00-753-3742	159	27
	168	14
	169	15
	170	10
5340-00-753-3744	157	19
5340-00-753-3745	166	9
	193	1
	194	1
	194	1
5315-00-753-3892	225	11
5315-00-753-3893	140	31
5315-00-753-3894	140	34
	200	8
5315-00-753-3895	230	2

STOCK NUMBER	FIG.	ITEM
5325-00-754-1619	142	28
	143	29
5315-00-754-1854	235	2
	238	33
5325-00-754-1976	84	4
	85	4
5340-00-755-4856	172	52
5310-00-761-6882	27	39
	28	45
	57	109
	95	88
	103	86
	110	51
	127	126
	208	1
	209	1
	210	26
5365-00-762-1908	127	59
5340-00-763-2465	305	30
5310-00-763-3925	235	19
	237	8
6240-00-763-7744	[redacted]	[redacted]
	270	24
	271	25
	274	29
	275	29
	[redacted]	[redacted]
5310-00-763-8921	308	2
5310-00-765-3197	95	19
	99	8
	103	19
	107	25
	127	79
	151	7
	153	10
	155	21
	271	57
	275	59
4820-00-765-9590	117	26
3040-00-766-2959	223	25
2590-00-767-3143	117	67
5310-00-767-9425	133	16
	140	33
	184	15
	200	9
	200	32
	323	8
5310-00-768-0318	20	28
	57	77
	190	13
	320	3
5310-00-768-0319	234	1
5310-00-773-7618	2	18
	38	112
	109	8
	119	68
	121	7
	127	58
	130	15
	136	11
	140	24
	166	5
	173	13
	197	1
	198	1
	200	29

STOCK NUMBER	FIG.	ITEM
	218	6
	234	7
	236	26
	254	4
	257	26
	270	41
	274	51
5310-00-773-7624	75	3
	112	3
	260	7
2520-00-773-8022	61	30
5340-00-775-5266	132	10
	133	10
	173	42
2540-00-776-0103	15	16
5342-00-776-1718	118	37
5120-00-776-1858	305	69
5305-00-781-1100	238	20
5305-00-781-3926	62	55
5305-00-781-3927	29	85
	161	24
5305-00-781-3928	57	81
	146	21
5305-00-781-3929	92	6
	161	14
5315-00-781-4529	255	47
3040-00-781-8550	181	45
	182	23
5310-00-782-1349	300	33
5315-00-782-1820	127	66
4730-00-782-5460	55	11
5305-00-782-9489	25	100
	65	20

STOCK NUMBER	FIG.	ITEM
	83	8
	92	5
	94	11
	102	11
	109	25
	135	12
	136	9
	146	46
	154	37
	172	77
	173	43
	194	11
	223	8
	233	18
[redacted]	[redacted]	[redacted]
	300	27
5325-00-783-4754	95	30
	95	35
	103	30
	109	2
	109	18
	109	43
	109	45
	109	46
	109	53
	110	28
5970-00-787-2317	241	43
5970-00-787-2321	241	17
5305-00-788-5487	75	42
5305-00-788-8401	172	20
2910-00-790-8736	63	1
2815-00-791-1453	62	161
5305-00-795-9336	62	38

STOCK NUMBER	FIG.	ITEM
6220-00-796-2244	114	4
	280	4
5330-00-796-2254	114	2
	280	2
6220-00-796-2261	115	4
6220-00-796-2263	115	1
5310-00-796-2269	115	16
4210-00-796-8260	127	19
5930-00-796-8845	129	20
5340-00-799-0973	95	7
	100	38
	103	7
	108	36
	109	19
4730-00-800-3554	127	42
	133	128
4730-00-800-3556	132	80
	133	118
5305-00-802-0016	142	10
	143	34
5315-00-802-0240	139	30
	140	18
5331-00-802-2130	255	44
5305-00-802-2764	38	1
5310-00-802-4701	127	100
5365-00-803-3392	139	17
4730-00-803-5776	154	59
5325-00-803-7301	312	10
5325-00-803-7302	38	125
5325-00-803-7305	126	46
5325-00-803-7316	223	19
4730-00-803-8353	62	221
5325-00-804-2192	53	24
5325-00-804-2274	235	6
	324	6
5325-00-804-2275	238	22
5331-00-804-5694	59	56
	61	8
5331-00-804-5695	25	80
	58	15
	61	31
	127	4
	132	78
	133	116
5325-00-804-7304	85	7
5325-00-804-7645	235	13
	238	17
	255	88
5325-00-804-7646	237	53
5365-00-804-7655	199	14
	200	7
4730-00-805-2221	127	5
5331-00-805-2966	25	69
	59	76
	132	86
	133	125
5342-00-806-0022	164	3
5325-00-806-0202	238	76
5325-00-806-0204	237	45
	238	27
	255	46
5325-00-806-4638	235	49
	238	58
	255	11
4730-00-806-5902	25	113
5325-00-807-5335	255	80

STOCK NUMBER	FIG.	ITEM
4240-00-807-6856	162	42
	210	1
5325-00-807-8151	235	48
	255	13
5331-00-807-8993	143	13
5331-00-808-0794	25	87
	127	2
	235	83
	256	12
5305-00-808-0864	30	25
	211	10
5325-00-808-0891	255	4
4730-00-808-5089	162	23
	210	17
4730-00-808-5090	162	25
4730-00-808-6668	59	64
5315-00-809-1442	245	10
5340-00-809-1490	191	13
	271	11
	272	54
	274	2
	275	12
5340-00-809-1500	117	16
	126	34
	272	61
	274	47
	278	61
5310-00-809-3079	38	58
	184	29
	185	29
5310-00-809-4058	12	11
	15	42
	19	7
	21	12
	27	5
	28	5
	39	35
	40	11
	57	90
	59	25
	61	33
	81	5
	82	2
	94	27
	95	43
	96	18
	97	26
	98	43
	99	10
	102	26
	103	42
	104	18
	105	18
	106	47
	106	50
	107	27
	109	62
	118	48
	126	27
	127	67
	129	18
	139	4
	146	5
	155	10
	157	34
	158	1

STOCK NUMBER	FIG.	ITEM
	159	1
	161	7
	162	9
	171	2
	183	18
	191	2
	193	40
	194	43
	199	2
	205	9
	207	5
	208	11
	209	11
	210	22
	227	6
	228	3
	232	2
	243	31
	257	3
[redacted]	[redacted]	[redacted]
[redacted]	[redacted]	[redacted]
[redacted]	[redacted]	[redacted]
[redacted]	[redacted]	[redacted]
[redacted]	[redacted]	[redacted]
[redacted]	[redacted]	[redacted]
	270	14
	271	34
	274	6
	275	11
[redacted]	[redacted]	[redacted]
[redacted]	[redacted]	[redacted]
[redacted]	[redacted]	[redacted]
	326	17

STOCK NUMBER	FIG.	ITEM
5310-00-809-4061	12	8
	29	73
	32	3
	33	17
	40	17
	95	69
	103	70
	146	54
	188	15
	224	22
5310-00-809-4085	60	16
	61	39
	126	50
5310-00-809-5998	25	46
	25	120
	39	2
	40	14
	57	35
	58	21
	113	5
	118	21
	127	25
	132	2
	137	25
	139	13
	140	14
	178	16
	179	11
	184	81
	185	94
	199	19
	213	16
	224	14

STOCK NUMBER	FIG.	ITEM
	225	9
	228	12
	261	23
	[redacted]	[redacted]
	326	8
5310-00-809-8533	2	47
	25	35
5310-00-809-8536	58	34
5310-00-809-8540	184	49
	184	49
	185	55
	185	55
5310-00-809-8544	59	37
	98	50
	99	28
	106	53
	107	6
	113	16
	208	7
	209	7
	[redacted]	[redacted]
5310-00-809-8546	14	4
	94	60
	102	62
	153	13
	173	19
	326	5
5315-00-809-8786	123	30
	124	6
5315-00-810-3701	137	15
5315-00-810-3702	113	4
	137	13
	139	26
5310-00-810-3912	29	10
	132	24
	133	7
5315-00-811-1242	33	8
5315-00-811-1245	326	4
5310-00-811-3494	99	25
	107	9
	271	58
	275	60
	300	1
5315-00-811-9105	127	28
5315-00-811-9106	162	38
5315-00-811-9107	129	67
4730-00-812-2434	25	88
5315-00-812-3427	38	107
5315-00-812-3685	129	37
	190	43
5315-00-812-3764	127	74
	226	14
4720-00-812-4476	191	8
5325-00-814-3316	103	14
5315-00-814-3530	201	15
	243	17
5315-00-814-3531	14	14
	139	14
	199	10
5315-00-814-4456	201	18
5970-00-815-1295	192	6
	BULK	23
5970-00-815-1300	311	6
5315-00-815-1405	127	70
	234	13
	235	113

STOCK NUMBER	FIG.	ITEM
	236	6
	237	10
	238	54
	254	6
	255	51
	271	53
	275	55
5315-00-816-1329	23	6
	177	14
5331-00-819-5111	57	105
	61	4
5310-00-820-6653	29	34
	30	35
	62	227
4730-00-821-0251	154	48
5305-00-821-3869	25	94
	29	11
	30	28
	38	89
	57	108
	121	12
	123	15
	130	10
	141	47
	185	72
	189	15
	197	10
	198	5
	224	7
	257	40
[redacted]	[redacted]	[redacted]
[redacted]	[redacted]	[redacted]
[redacted]	[redacted]	[redacted]

STOCK NUMBER	FIG.	ITEM
[redacted]	[redacted]	[redacted]
	296	7
[redacted]	[redacted]	[redacted]
5315-00-822-0689	223	3
	235	23
	238	12
	255	31
4730-00-822-5609	25	89
5315-00-822-9460	177	13
	223	10
5310-00-823-8803	29	35
	30	34
	39	8
	58	25
	60	48
[redacted]	[redacted]	[redacted]
5310-00-823-8804	18	8
	63	12
	173	25
	213	12
	226	2
	268	15
	270	3
	274	8
	276	16
5315-00-825-8350	129	13
5315-00-826-3251	235	101
	238	50
	255	59
5310-00-827-0594	15	54
5315-00-827-7604	257	38
4730-00-828-5022	57	37
5315-00-828-8190	226	11

STOCK NUMBER	FIG.	ITEM
5995-00-828-8683	95	4
	103	4
4720-00-829-2760	162	21
4720-00-829-2761	305	95
[redacted]	[redacted]	[redacted]
	[redacted]	[redacted]
5310-00-829-9981	95	70
	103	71
5330-00-830-6565	115	12
2540-00-831-6946	200	1
5340-00-831-6949	130	13
	160	7
	172	71
4730-00-833-0833	57	30
5935-00-833-8561	98	7
	106	7
5310-00-833-8567	96	8
	104	8
	111	5
	116	5
	147	3
5310-00-834-8732	139	7
	140	7
	190	10
	199	6
5310-00-834-8734	132	20
5310-00-835-2036	58	44
5331-00-835-7693	42	30
	43	42
	44	42
4010-00-835-9815	127	18
	133	46
	271	33

STOCK NUMBER	FIG.	ITEM
	275	37
5315-00-836-0646	84	5
5305-00-836-8346	38	46
	184	95
	185	112
5315-00-836-9628	229	4
5315-00-837-4545	25	129
	141	14
	161	4
[redacted]	[redacted]	[redacted]
5340-00-839-0653	62	249
5315-00-839-2325	33	3
	39	59
	40	57
	126	28
	127	29
	161	9
	162	37
	218	28
	231	4
	312	11
	326	6
5315-00-839-2326	127	50
	129	35
5315-00-839-5820	12	27
	129	56
	147	6
	181	51
5315-00-839-5822	25	67
	123	32
	228	11
5925-00-840-5393	95	49
	103	48

STOCK NUMBER	FIG.	ITEM
	109	68
5310-00-840-5785	236	10
	237	21
	255	54
3040-00-840-9526	201	4
5310-00-841-0836	62	291
5310-00-842-1190	25	143
	132	11
4730-00-842-1766	127	41
5315-00-842-3044	25	125
	38	94
	55	14
	123	1
	129	9
	135	6
	137	28
	141	16
	205	1
	228	22
	229	8
5310-00-842-7634	16	9
5315-00-843-7986	127	76
	312	14
5315-00-843-7987	124	2
3110-00-843-8410	138	49
5315-00-844-0498	33	10
5315-00-844-3663	215	7
5315-00-844-3665	315	5
5315-00-844-3956	127	31
5315-00-844-3966	257	6
5315-00-844-4790	213	20
5315-00-844-5835	73	3
	257	5
5315-00-844-5836	2	48
	187	2
4730-00-845-2377	162	63
5320-00-845-9501	81	25
5315-00-846-0126	16	10
5331-00-846-0502	47	5
	54	2
5305-00-846-5703	58	7
	65	10
	173	60
5305-00-847-1159	94	55
	102	50
	[redacted]	[redacted]
5315-00-849-5582	53	22
5310-00-850-6914	25	6
5310-00-851-2677	39	75
	40	73
5310-00-851-2682	25	11
	27	38
	28	44
	29	84
	126	53
	181	30
	183	11
	213	21
	[redacted]	[redacted]
5330-00-851-7544	221	3
5306-00-852-4192	228	19
5995-00-852-8493	97	19
	105	13
5325-00-853-9137	235	88
5310-00-853-9335	126	20
	129	32

STOCK NUMBER	FIG.	ITEM
	243	13
	[redacted]	[redacted]
5340-00-854-6737	158	19
	159	19
5930-00-855-3938	59	44
5315-00-855-7331	237	64
	238	51
6115-00-857-0582	62	95
5315-00-857-2480	231	10
	312	7
9905-00-858-5683	177	18
4730-00-864-1611	62	219
5330-00-864-5422	62	287
5340-00-865-9496	126	26
	161	28
5310-00-865-9513	58	39
	73	21
	86	5
	90	9
	123	5
	135	11
	136	3
	170	24
	171	20
	181	65
	182	8
	183	2
	190	36
	202	4
	227	12
	233	17
	243	25
	270	8

STOCK NUMBER	FIG.	ITEM
	274	13
	[redacted]	[redacted]
4240-00-866-1825	164	2
5310-00-866-4417	15	7
	20	8
	23	3
	25	32
	29	67
	30	5
	31	16
	34	9
	38	6
	55	29
	57	31
	58	29
	94	7
	98	41
	102	7
	106	41
	119	52
	132	19
	133	27
	157	30
	158	40
	159	25
	162	54
	165	3
	173	17
	184	31
	185	15
	185	32
	190	9
	193	34

STOCK NUMBER	FIG.	ITEM
	194	37
	199	9
	200	12
	206	8
	222	8
	[redacted]	[redacted]
	296	22
5310-00-866-4418	17	8
	29	18
	30	17
	30	17
	34	4
	39	82
	40	38
	42	6
	43	6
	44	6
	55	4
	57	42
	185	9
5310-00-866-5293	29	58
	58	23
	59	4
	60	66
	61	25
	94	9
	102	9
	131	20
5930-00-868-4223	145	3
5210-00-869-0466	319	60
[redacted]	[redacted]	[redacted]
5310-00-869-9576	109	21
5340-00-870-5718	62	210
5315-00-871-7197	161	1
5340-00-872-0889	256	9
5305-00-876-4828	18	17
	324	13
5310-00-877-5795	123	42
5310-00-877-5796	81	35
	98	1
	98	21
	106	19
	239	12
5310-00-877-5797	12	13
	27	53
	28	62
	39	81
	40	87
	57	52
	59	20
	60	6
	61	12
	94	45
	95	6
	97	9
	99	43
	100	31
	102	56
	103	6
	105	24
	107	43
	108	29
	149	12
	153	12
	181	66
	182	7

STOCK NUMBER	FIG.	ITEM
	191	18
	210	31
	271	66
	275	68
5310-00-877-5972	25	52
	28	29
	29	51
	31	42
	38	41
	39	69
	40	68
	46	2
	51	2
	52	23
	53	2
	57	82
	58	6
	60	50
	82	6
	94	57
	102	55
	109	27
	119	57
	123	13
	127	55
	129	60
	132	14
	133	54
	136	20
	161	5
	170	4
	171	16
	179	21
	181	4
	184	45
	185	84
	188	11
	193	21
	194	25
	204	2
	211	9
	227	10
	243	2
	[redacted]	[redacted]
	[redacted]	[redacted]
	[redacted]	[redacted]
	[redacted]	[redacted]
	[redacted]	[redacted]
	[redacted]	[redacted]
	296	8
	315	7
5310-00-877-5973	58	12
	73	4
	86	7
	110	6
	113	7
	179	39
	200	16
5310-00-877-7527	29	5
	30	17
	184	96
	185	113
4730-00-877-8997	60	59
5310-00-878-7196	160	8
[redacted]	[redacted]	[redacted]
6220-00-880-1624	94	1

STOCK NUMBER	FIG.	ITEM
	102	1
5310-00-880-5976	75	17
	172	18
5310-00-880-5977	169	5
5310-00-880-5978	235	10
	238	61
	255	28
	[redacted]	[redacted]
	[redacted]	[redacted]
	[redacted]	[redacted]
7690-00-880-7293	157	28
	169	17
	170	14
7690-00-880-7295	168	6
5310-00-880-7745	115	18
5310-00-880-7746	107	52
5305-00-881-0705	181	54
	[redacted]	[redacted]
5315-00-881-1362	19	8
4730-00-883-0643	154	56
5315-00-883-7064	174	2
5310-00-883-9384	109	20
	119	40
	195	2
	196	2
[redacted]	[redacted]	[redacted]
4210-00-885-5724	127	21
4730-00-886-7144	132	79
5310-00-889-2527	107	51
5310-00-889-2528	98	20
	106	18
	232	21
5310-00-889-2769	162	67

STOCK NUMBER	FIG.	ITEM
5305-00-889-2991	78	1
5305-00-889-2997	191	22
5305-00-889-2998	314	1
5305-00-889-2999	169	10
5305-00-889-3000	153	9
5305-00-889-3001	149	9
5305-00-889-3002	115	7
5305-00-889-3116	93	9
5970-00-889-3844	BULK	25
	BULK	44
	BULK	45
	BULK	53
	BULK	54
	BULK	40
	BULK	49
	BULK	50
	BULK	47
5340-00-890-3385	165	5
5310-00-891-1734	30	13
5310-00-891-1749	14	16
5310-00-891-1754	123	41
5340-00-894-9545	158	44
	159	40
	193	43
	194	46
	290	6
	[redacted]	[redacted]
5310-00-897-6145	119	27
5315-00-899-4118	15	18
5975-00-899-4606	59	60
	96	14
	104	14
5305-00-900-0576	15	20

STOCK NUMBER	FIG.	ITEM
	17	3
	31	11
	40	1
5330-00-900-8006	22	4
	38	76
	193	13
	193	23
	194	16
	194	27
5305-00-900-8268	315	8
5310-00-900-9421	129	55
5315-00-901-2192	73	26
5310-00-902-6676	27	49
	28	54
	151	1
	153	23
	154	41
	178	19
	179	9
	268	20
	270	11
	271	20
	274	15
	276	21
5310-00-902-8481	126	54
4730-00-902-8991	62	223
5975-00-903-2284	141	24
5315-00-903-5944	129	45
5315-00-903-6759	135	7
5310-00-903-8282	27	61
	28	67
	106	1
	134	11
	183	17
	243	7
5315-00-904-0912	181	46
	182	24
	199	18
	200	27
5315-00-904-1642	133	48
5310-00-904-4111	95	86
	103	84
	110	48
[redacted]	[redacted]	[redacted]
5310-00-905-8451	151	8
	153	11
2815-00-907-8954	62	108
4730-00-908-3193	81	2
	141	10
	154	7
	191	7
4730-00-908-3194	57	19
	162	24
	210	27
4730-00-908-3195	117	28
	118	52
	141	52
	162	1
4730-00-908-6292	57	63
	117	19
	138	33
	154	12
4730-00-908-6293	57	59
	81	26
	141	28
	154	14

STOCK NUMBER	FIG.	ITEM
4730-00-908-6294	55	19
	81	28
	117	71
	146	41
4730-00-909-8627	119	49
	141	31
	146	24
	154	13
5305-00-910-7332	123	44
2590-00-912-5650	127	22
2590-00-912-6487	199	15
	200	6
4820-00-913-1266	132	87
	133	126
5305-00-914-3783	226	15
5305-00-914-3786	25	90
5305-00-914-3821	38	97
	187	18
5305-00-914-4171	27	50
	28	55
	30	14
5310-00-914-6028	197	5
5120-00-915-4587	305	21
5120-00-915-4588	305	22
3040-00-916-1879	62	86
4730-00-916-2142	57	23
5305-00-921-0890	73	43
5340-00-922-3380	162	66
3441-00-922-6699	319	48
5305-00-922-7994	31	26
	31	26
	39	85
	42	45
	43	19
	44	19
	184	3
	185	17
	300	53
5325-00-923-9512	95	62
	103	61
5305-00-924-4235	2	10
5310-00-924-8210	323	10
5999-00-925-6495	281	4
5310-00-925-9645	206	6
5310-00-926-1835	118	55
	119	34
	172	74
	173	61
5340-00-926-5334	154	29
5310-00-926-5877	2	34
	109	7
	185	96
	[redacted]	[redacted]
5310-00-926-5880	132	17
	133	43
	165	19
5310-00-926-5913	95	84
	110	46
5310-00-927-9400	25	139
	27	14
	27	51
	28	14
	28	56
	38	73
	109	31
	158	8

STOCK NUMBER	FIG.	ITEM
	159	8
	181	16
	182	21
	296	5
5310-00-929-6395	95	54
	103	52
	109	72
	110	43
	112	4
	125	5
	172	19
	249	2
	251	10
	260	6
5325-00-930-1615	180	1
5325-00-930-1616	305	60
5325-00-930-1618	1	2
	305	70
5325-00-930-1619	117	58
	118	4
	119	58
5310-00-930-3603	29	30
4730-00-930-5392	61	37
5310-00-930-8214	82	23
2910-00-930-9367	154	61
5330-00-931-7234	260	10
5305-00-932-1658	238	3
5305-00-932-3280	36	2
5306-00-933-0595	183	12
5310-00-933-8118	236	17
	241	12
	251	13
	260	2
5310-00-933-8119	98	49
	106	52
	125	7
	246	17
	[redacted]	[redacted]
	[redacted]	[redacted]
	[redacted]	[redacted]
	[redacted]	[redacted]
5310-00-933-8120	101	4
	130	2
	234	10
	236	14
	237	66
	246	1
5310-00-933-8121	75	5
	97	4
	105	7
	130	20
	133	11
	169	6
	172	8
	173	39
	202	3
	244	5
	246	12
	[redacted]	[redacted]
	[redacted]	[redacted]
	[redacted]	[redacted]
	[redacted]	[redacted]
5310-00-933-8778	59	9
	75	44
	95	40
	103	40

STOCK NUMBER	FIG.	ITEM
	103	95
	109	58
	110	59
	130	38
	133	110
	173	29
	[redacted]	[redacted]
	[redacted]	[redacted]
	323	9
5310-00-934-9731	132	52
	133	69
5310-00-934-9747	149	3
5310-00-934-9748	236	16
5310-00-934-9757	147	16
	155	18
5310-00-934-9758	162	10
	173	30
5310-00-934-9759	9	18
	93	29
5310-00-934-9760	25	97
5310-00-934-9765	228	21
5310-00-935-8984	94	12
	102	12
	130	35
	157	27
5355-00-937-0434	139	8
	140	8
	199	7
5940-00-937-5237	94	38
	102	38
5305-00-938-1539	30	18
	36	4
	38	39
	40	9
2590-00-938-5914	141	29
5305-00-939-0660	14	1
	123	39
	187	28
5305-00-939-0798	323	12
5310-00-939-0850	172	27
	[redacted]	[redacted]
5310-00-939-1060	132	12
	133	14
2815-00-939-8084	62	97
2815-00-939-8924	62	98
5305-00-939-9208	246	16
5305-00-939-9222	78	20
5305-00-939-9231	78	15
5305-00-940-8068	2	32
5120-00-941-3824	319	63
5310-00-941-6019	95	21
	98	53
	99	11
	103	21
	106	56
	107	28
	173	26
	242	1
	[redacted]	[redacted]
	282	10
	[redacted]	[redacted]
5305-00-942-5213	314	15
5305-00-942-8422	73	36
4030-00-946-8497	57	65
5305-00-947-4352	30	37
	182	35

STOCK NUMBER	FIG.	ITEM
5305-00-947-4353	29	4
	31	3
	39	88
	185	3
5305-00-947-4354	29	6
	184	35
	185	45
5305-00-947-4355	37	2
5305-00-947-4356	31	30
	58	35
	184	8
	185	11
	300	56
5305-00-947-4358	18	4
5305-00-947-4360	29	27
	308	4
5305-00-947-4362	146	48
6145-00-948-9479	235	81
	256	10
6145-00-949-8005	239	18
	240	15
5340-00-949-8637	165	9
5310-00-950-1310	199	32
	314	2
5310-00-950-1403	119	29
	172	51
4730-00-951-2382	132	81
	133	117
	133	119
5315-00-951-3215	38	4
5310-00-951-4679	169	11
	206	2
	223	22
5310-00-951-7209	38	43
	39	10
	40	22
5315-00-951-7542	25	134
	38	101
	141	13
5310-00-952-0309	75	24
	244	4
	[redacted]	[redacted]
	[redacted]	[redacted]
5305-00-954-2728	98	47
	106	58
5305-00-954-3937	187	31
5305-00-954-4295	38	115
	[redacted]	[redacted]
	[redacted]	[redacted]
5305-00-954-8942	241	57
5310-00-956-4549	38	126
5315-00-957-0763	190	11
5305-00-957-1497	139	28
	140	16
5315-00-957-2399	38	106
	205	5
5320-00-957-2514	214	2
	218	13
5325-00-957-5307	255	1
5305-00-957-6266	113	11
5305-00-957-6638	30	8
	94	85
	102	47
	211	1
5315-00-957-7111	73	40
[redacted]	[redacted]	[redacted]

STOCK NUMBER	FIG.	ITEM
5315-00-957-9388	129	51
5315-00-957-9389	132	1
5315-00-957-9399	184	54
	185	61
5315-00-957-9417	228	8
4730-00-958-0384	117	31
5305-00-958-0585	270	34
	274	38
5305-00-958-5245	15	44
	208	4
	209	4
5305-00-958-5246	27	34
	28	40
	222	3
[redacted]	[redacted]	[redacted]
5305-00-958-5248	27	63
	28	69
5305-00-958-5258	186	16
	187	21
5305-00-958-6230	314	6
5340-00-958-6917	157	14
	158	11
	159	11
5315-00-958-8274	237	41
5305-00-959-0379	251	14
5305-00-959-0382	125	4
	245	8
	251	11
[redacted]	[redacted]	[redacted]
5310-00-959-1488	123	11
	126	31
	129	44
	206	7
5305-00-959-1909	130	3
5305-00-959-2683	98	46
	106	44
5305-00-959-2723	21	11
5310-00-959-7600	126	36
	139	9
5310-00-961-8391	123	2
5330-00-961-9470	63	4
5305-00-964-0503	92	7
5305-00-964-0518	29	29
5305-00-964-0692	58	22
5310-00-964-3414	94	39
	102	39
5310-00-964-3415	110	3
5340-00-964-5267	94	18
	102	18
5305-00-969-4484	123	6
5120-00-970-6423	305	107
5310-00-971-7989	25	66
	62	271
	235	112
	237	13
	255	58
5340-00-972-8093	113	3
4240-00-974-1237	164	1
5310-00-975-2075	123	10
5310-00-976-1321	323	15
5120-00-977-7421	305	56
4910-00-977-7489	319	51
4910-00-977-7507	319	49
5305-00-978-9343	223	21
5305-00-978-9347	257	13
5305-00-978-9348	257	30

STOCK NUMBER	FIG.	ITEM
5305-00-978-9356	105	36
5305-00-978-9378	186	1
	233	16
5305-00-978-9379	275	40
5305-00-978-9380	233	14
5305-00-978-9394	21	10
	213	17
	[redacted]	[redacted]
5305-00-978-9395	[redacted]	[redacted]
5305-00-978-9397	232	23
4910-00-981-3105	319	44
5120-00-981-3108	319	33
5305-00-981-3512	158	35
	159	35
5310-00-982-6813	201	21
5305-00-983-5334	232	19
5305-00-983-5344	213	26
5305-00-983-6654	257	29
5305-00-983-6664	134	32
5305-00-983-6730	25	86
	206	1
5305-00-983-7466	232	7
5310-00-983-8483	39	60
	40	56
	96	51
	104	51
5310-00-983-8485	15	29
5310-00-983-9472	241	56
5315-00-984-2645	165	7
5310-00-984-3806	58	36
	95	71
	97	21
	103	72
	105	30
	107	58
	126	21
	137	11
	181	52
	233	5
	274	43
	275	24
5310-00-984-3807	126	32
	139	1
5305-00-984-4983	93	30
5305-00-984-4984	99	19
	107	32
5305-00-984-4988	151	6
	155	25
	282	8
	[redacted]	[redacted]
5305-00-984-4992	96	39
	104	39
6220-00-984-5181	94	16
	102	16
5305-00-984-5674	47	6
	54	1
5305-00-984-5678	137	8
5305-00-984-5689	181	6
5305-00-984-5692	218	24
5305-00-984-6189	115	10
5305-00-984-6191	173	2
	218	11
5305-00-984-6193	98	48
	106	51
5305-00-984-6194	95	18
	103	18

STOCK NUMBER	FIG.	ITEM
	[redacted]	[redacted]
5305-00-984-6195	99	30
	107	5
	164	5
	208	5
	209	5
5305-00-984-6197	93	33
5305-00-984-6198	242	7
5305-00-984-6209	190	33
5305-00-984-6210	39	65
	40	62
	59	51
	118	69
	141	50
	154	31
	210	16
	268	9
	270	27
	271	14
	272	33
	274	26
	275	15
	276	10
	278	16
5305-00-984-6211	14	7
	94	34
	96	3
	102	34
	104	3
	117	37
	118	50
	141	20
	146	27
	162	4
	275	85
5305-00-984-6212	118	14
	144	3
	162	32
	228	7
5305-00-984-6213	97	34
	105	40
5305-00-984-6214	162	59
	173	18
	210	8
5305-00-984-6216	268	18
	276	19
5975-00-984-6582	57	29
	59	49
	61	19
	132	84
	133	90
	144	6
5315-00-984-6829	251	5
5315-00-984-6889	25	159
5310-00-984-7042	59	6
	75	31
	95	85
	103	83
	109	26
	110	47
	130	6
	172	57
	173	14
	179	46
	[redacted]	[redacted]
	270	42

STOCK NUMBER	FIG.	ITEM
	[redacted]	[redacted]
	[redacted]	[redacted]
	[redacted]	[redacted]
	[redacted]	[redacted]
	323	3
5305-00-984-7364	268	24
	276	25
[redacted]	[redacted]	[redacted]
5310-00-984-8818	15	36
5310-00-985-0782	127	15
5975-00-985-6630	59	53
	108	70
5310-00-987-1294	27	20
	28	19
	29	12
	34	12
	38	64
	40	19
	41	4
	60	21
	61	28
	81	44
	83	4
	121	10
	132	65
	133	82
	177	11
	179	48
	188	9
	190	30
	300	16
5305-00-988-1722	272	55
	278	52
5305-00-988-1723	59	40
	98	34
	106	34
	137	31
	182	38
	228	15
	243	9
	272	62
	274	46
	275	44
	278	62
5305-00-988-1724	137	4
	162	17
	168	11
	183	4
	199	1
	314	5
5305-00-988-1725	168	13
	170	7
	181	39
	182	27
	207	4
5305-00-988-1726	81	17
5305-00-988-1727	268	14
	270	17
	274	19
	276	15
	[redacted]	[redacted]
	300	48
5305-00-988-1728	27	57
	28	63
5305-00-988-7601	75	12
5305-00-988-7602	241	50

STOCK NUMBER	FIG.	ITEM
5305-00-988-7604	125	8
	251	19
	[redacted]	[redacted]
5305-00-988-7605	172	31
	173	59
	282	5
	[redacted]	[redacted]
5305-00-988-7606	99	7
	107	24
5305-00-988-7608	101	5
5305-00-988-7613	190	37
5305-00-988-7614	173	57
	[redacted]	[redacted]
[redacted]	[redacted]	[redacted]
	[redacted]	[redacted]
5305-00-988-7792	172	38
5305-00-988-7836	158	33
	159	33
5305-00-988-7846	321	5
5342-00-988-9958	115	13
5315-00-989-0541	226	28
5310-00-989-0640	75	27
	101	3
5310-00-989-0908	130	24
	133	51
5310-00-989-5525	95	38
	103	38
	103	82
	103	94
	109	57
	110	58
	133	18
5310-00-989-5953	130	33

STOCK NUMBER	FIG.	ITEM
5310-00-989-5956	130	17
	158	39
	159	39
5325-00-989-6286	95	14
5305-00-989-7434	60	63
	95	48
	103	47
	109	67
	149	10
	154	38
	191	23
5305-00-989-7435	39	67
	40	64
	57	50
	59	63
	60	76
	61	16
	81	50
	95	23
	99	45
	107	45
	153	2
	153	18
	154	55
	191	15
	195	4
	196	4
	270	21
	271	83
	274	23
5315-00-990-1338	234	3
	235	119
	236	9

STOCK NUMBER	FIG.	ITEM
	237	16
	254	8
	255	52
5315-00-990-2889	326	11
5310-00-990-3966	133	13
5305-00-990-6444	149	8
5305-00-990-8632	19	1
	188	8
5305-00-992-6004	246	2
5305-00-992-6063	244	6
5305-00-993-1848	27	56
	28	61
	59	23
	60	2
	61	40
	94	43
	95	10
	100	33
	102	72
	103	10
	105	28
	108	31
	109	54
	151	10
	181	60
	182	10
	227	32
	271	63
	275	65
5305-00-993-1851	27	43
	28	49
	95	9
	97	11
	100	35
	103	9
	103	23
	105	25
	108	32
5305-00-993-2461	134	8
5305-00-993-2738	183	21
5340-00-993-6207	191	10
4730-00-993-7764	25	122
5305-00-993-9189	241	7
5330-00-994-4410	62	131
5330-00-994-4411	62	135
5935-00-995-0420	206	3
4730-00-995-1559	154	73
5305-00-995-3441	268	19
	271	22
	275	26
	276	20
5305-00-995-3444	57	73
	59	29
	210	32
5310-00-995-9678	41	1
5310-00-997-1888	27	9
	28	9
	94	65
	97	24
	102	67
	105	14
	106	64
	106	65
	146	1
	155	5
5360-00-998-5022	249	10

STOCK NUMBER	FIG.	ITEM
3460-00-999-1173	319	39
5120-00-999-1206	319	30
4910-00-999-1208	319	52
5210-00-999-1209	319	46
3460-00-999-1259	319	41
4910-00-999-1506	319	59
5330-00-999-1983	142	3
	143	3
5330-00-999-1984	142	8
	143	8
5330-00-999-1985	142	2
	143	2
2920-00-999-1986	142	17
	143	17
5340-00-999-2001	29	82
6150-00-999-2100	141	26
5305-00-999-2127	143	10
5365-00-999-2280	142	29
	143	30
5310-00-999-9438	17	2
	18	5
	29	7
	31	2
	38	38
	146	49
	184	2
	185	2
	300	54
[redacted]	[redacted]	[redacted]
	[redacted]	[redacted]
5305-01-004-9517	75	23
5331-01-005-0523	73	45
4730-01-007-5232	25	65

STOCK NUMBER	FIG.	ITEM
5315-01-008-7084	25	38
5340-01-009-6848	210	12
5331-01-010-3371	59	19
	75	34
5305-01-010-9940	97	31
5306-01-011-1706	144	9
4730-01-011-7736	117	8
5331-01-012-5448	248	2
5360-01-012-9302	257	27
5305-01-013-3691	271	36
5365-01-014-4453	154	72
5365-01-014-7383	137	22
5305-01-015-3356	60	70
5310-01-015-3370	224	15
5306-01-015-5675	90	1
5340-01-021-9614	57	102
4240-01-026-3112	162	46
6220-01-028-4488	94	21
	102	21
5305-01-028-8869	62	50
5305-01-029-1193	62	41
5305-01-030-4898	127	34
5305-01-031-0686	100	23
	108	24
5305-01-032-0552	255	57
5305-01-032-2312	38	56
5306-01-032-6440	167	1
5975-01-034-5617	311	14
5975-01-034-5871	127	64
5305-01-036-2811	62	102
5855-01-037-7341	325	10
5305-01-038-4764	134	58
5330-01-039-9514	77	2

STOCK NUMBER	FIG.	ITEM
[redacted]	[redacted]	[redacted]
5330-01-043-5605	62	196
5310-01-044-2052	76	4
5330-01-044-2096	76	3
4730-01-044-4931	57	22
4720-01-045-2605	BULK	11
5360-01-045-5461	215	8
5310-01-045-6615	90	32
5305-01-045-8389	199	29
5331-01-046-3300	78	17
	134	47
	255	72
5365-01-046-3670	145	1
5340-01-046-5903	97	28
	98	16
	100	25
	105	22
	108	18
5306-01-046-7990	137	20
5975-01-048-2922	60	58
	61	11
1005-01-048-4848	219	1
2520-01-048-6823	62	59
1005-01-049-5382	219	2
5340-01-049-9564	127	86
4730-01-050-1599	57	94
1440-01-050-4911	244	8
4720-01-050-7544	60	32
5306-01-052-2402	90	25
5305-01-053-5003	119	13
6680-01-054-6106	25	79
5305-01-054-6228	123	26
5315-01-058-3487	127	84

STOCK NUMBER	FIG.	ITEM
	186	9
	215	3
[redacted]	[redacted]	[redacted]
5330-01-060-2986	62	292
5330-01-060-2988	62	282
5330-01-060-4424	62	151
5330-01-060-9064	76	1
5305-01-061-1413	237	69
5305-01-064-5453	123	24
5310-01-064-8787	18	14
	33	6
5360-01-066-0011	228	13
5325-01-066-2840	25	25
	74	2
5310-01-066-2942	62	88
6150-01-068-7926	275	57
5305-01-070-1701	145	2
5331-01-070-9657	78	3
5305-01-072-8816	62	62
5305-01-072-8818	62	33
5330-01-072-8830	62	269
5331-01-072-8984	62	74
5305-01-072-9021	62	22
5306-01-072-9115	62	228
5940-01-073-2937	241	11
[redacted]	[redacted]	[redacted]
	[redacted]	[redacted]
1240-01-073-7507	245	1
1240-01-073-7508	245	3
9905-01-073-9737	125	12
7690-01-075-7922	158	57
2590-01-076-4160	242	6
5340-01-077-3593	154	28

STOCK NUMBER	FIG.	ITEM
5331-01-077-3914	245	2
5310-01-077-6817	98	24
	106	23
5331-01-078-2379	46	4
	51	4
	52	21
5310-01-078-2992	59	41
[redacted]	[redacted]	[redacted]
	[redacted]	[redacted]
5310-01-078-9699	237	38
	255	66
	271	32
	275	36
4730-01-079-2590	62	185
5365-01-079-2927	249	20
1240-01-079-2960	245	6
5330-01-079-2992	245	5
5340-01-079-3081	249	13
5330-01-079-3207	248	4
3120-01-079-6527	62	81
5340-01-079-8097	62	52
6650-01-079-8548	248	6
6650-01-080-7648	248	3
5305-01-081-5044	129	63
6685-01-081-9721	59	55
5331-01-081-9806	174	6
5305-01-085-8197	62	156
4730-01-086-1459	305	37
5305-01-086-7036	62	285
5305-01-088-6019	62	155
5305-01-088-6063	95	73
	103	74
5305-01-088-6068	247	2

STOCK NUMBER	FIG.	ITEM
4730-01-089-5902	62	136
5365-01-091-5750	238	46
	255	39
5305-01-091-6906	30	9
4730-01-092-1686	132	85
	133	124
5365-01-092-9563	238	11
5935-01-093-0846	[redacted]	[redacted]
6220-01-093-4439	94	63
	102	65
5325-01-093-5525	15	3
	15	11
	177	16
	185	99
4730-01-093-8464	60	44
3020-01-093-8786	238	23
5340-01-094-0903	238	79
5340-01-094-0904	235	45
5307-01-094-1587	236	11
4720-01-094-5158	61	10
3020-01-094-6994	238	52
5310-01-094-9031	30	38
	182	18
	182	18
3010-01-095-0329	235	9
1005-01-095-0330	237	50
5340-01-095-0806	238	63
3040-01-095-1021	235	44
3040-01-095-1022	255	32
3040-01-095-2312	238	48
3020-01-095-2362	255	76
3020-01-095-3596	255	38
5930-01-095-5202	237	52

STOCK NUMBER	FIG.	ITEM
1005-01-095-5203	237	37
	255	64
1005-01-095-5205	233	12
2815-01-095-8507	62	110
4730-01-095-8786	255	67
3110-01-095-8788	255	42
3110-01-095-8792	203	1
5340-01-095-8794	223	15
3040-01-095-9017	235	115
3020-01-095-9177	255	94
5315-01-096-5144	213	13
5360-01-096-5263	133	137
	235	34
	237	73
5310-01-096-7389	2	31
5935-01-097-0399	94	3
	98	6
	102	3
	106	6
5340-01-097-4871	235	95
	237	3
	255	86
4910-01-097-6948	305	11
4910-01-097-6986	319	53
4910-01-097-6988	319	76
5305-01-097-7899	282	4
3040-01-098-2315	238	69
5340-01-098-6911	231	5
1005-01-098-6912	228	20
5315-01-098-7340	187	7
3130-01-098-7385	221	11
3010-01-098-7400	235	14
	238	37
	255	70
2530-01-098-7401	221	7
2530-01-098-7402	221	15
3040-01-098-7995	235	75
5935-01-098-8738	326	10
5340-01-099-0161	231	3
3040-01-099-0162	213	24
6615-01-099-0164	233	20
5340-01-099-0166	186	10
3040-01-099-8473	238	78
3040-01-099-8474	238	80
3020-01-100-8586	238	8
5315-01-101-1761	237	4
	255	90
3020-01-101-1816	235	73
2520-01-101-1845	235	102
3040-01-101-3979	255	77
3040-01-101-3980	235	28
1005-01-101-6248	213	23
1005-01-101-6249	227	8
1005-01-101-6251	213	3
5360-01-101-6493	182	12
3040-01-102-1657	235	118
5365-01-102-3487	42	29
	43	41
	44	41
5340-01-102-3488	42	16
	43	21
	44	21
5325-01-102-3533	42	36
	43	37
	44	37
5340-01-102-4208	199	5

STOCK NUMBER	FIG.	ITEM
5340-01-102-4530	42	43
	43	16
	44	16
3040-01-102-4531	42	3
	43	3
	44	3
3040-01-102-4532	42	4
	43	4
	44	4
3020-01-102-4533	42	38
5340-01-102-4535	42	17
2530-01-102-4536	53	11
5340-01-102-4539	49	2
2530-01-102-4540	42	42
	43	20
	44	20
3110-01-102-4645	53	19
5310-01-102-4670	53	6
5310-01-102-4671	52	18
5330-01-102-4681	46	10
	51	10
5330-01-102-4682	52	12
5330-01-102-4683	52	26
3020-01-102-4684	42	1
2590-01-102-4687	100	2
	108	2
4820-01-102-4691	50	3
3120-01-102-4698	53	15
3120-01-102-4699	53	13
3120-01-102-4700	52	9
3120-01-102-4701	52	11
5340-01-102-4702	42	24
	43	30
	44	30
5306-01-102-4711	53	9
2530-01-102-4713	46	8
2530-01-102-4714	51	8
5330-01-102-4719	53	18
5330-01-102-4720	42	23
	43	29
	44	29
5365-01-102-4738	42	41
	43	17
	44	17
2530-01-102-4742	52	14
5340-01-102-4744	53	25
3130-01-102-4746	53	8
2530-01-102-4765	51	11
2530-01-102-4769	46	3
	51	3
	52	22
2530-01-102-4770	53	3
5315-01-102-7815	213	19
5340-01-102-7860	200	19
5340-01-102-7861	205	7
5360-01-102-7889	213	29
5315-01-102-8571	255	89
5310-01-102-9869	238	72
5365-01-102-9884	255	43
5310-01-103-2587	25	163
	30	40
	40	36
	133	37
	182	14
	190	24
3120-01-104-5989	132	54

STOCK NUMBER	FIG.	ITEM
	133	71
2530-01-104-8941	KITS	7
5310-01-104-9035	18	15
	25	14
	29	17
	31	49
	34	13
	40	29
	42	20
	43	26
	44	26
	182	16
	182	16
	184	59
	185	66
	261	30
5330-01-105-3324	53	21
3020-01-105-5542	238	70
5360-01-105-5600	199	17
	200	3
5340-01-105-6450	90	39
3110-01-105-6451	21	5
3120-01-105-6452	21	4
2510-01-105-6453	15	10
5340-01-105-6454	15	47
2920-01-105-6547	62	229
5330-01-105-6551	90	17
5330-01-105-6552	90	4
5325-01-105-6567	90	6
5340-01-105-6573	90	11
5365-01-105-6583	90	34
3130-01-105-6594	92	8
3040-01-105-6597	123	40
5310-01-105-6603	90	28
5340-01-105-6610	90	14
5340-01-105-6611	90	16
5340-01-105-6612	90	3
2510-01-105-6633	15	2
2530-01-105-8697	126	41
5315-01-105-8727	124	7
3120-01-105-8763	126	59
5340-01-105-8773	126	44
5315-01-105-8776	126	14
3040-01-105-8791	126	12
5315-01-105-8974	235	104
5315-01-105-8975	231	9
2990-01-106-0124	82	4
2520-01-106-0125	KITS	8
4820-01-106-0201	81	30
5310-01-106-0212	73	17
5365-01-106-0913	182	45
5331-01-106-0943	58	4
5305-01-106-5225	235	15
3040-01-106-5968	235	30
5340-01-106-6148	169	14
5210-01-106-6157	169	13
5365-01-106-6159	73	22
9515-01-106-6199	31	41
3110-01-106-6373	27	60
	28	66
2520-01-106-6447	124	5
4020-01-106-6523	165	10
5340-01-106-6543	126	47
5340-01-106-6544	154	43
5325-01-106-6553	9	4
	95	20

STOCK NUMBER	FIG.	ITEM
	103	20
	160	10
5340-01-106-6568	38	90
5340-01-106-6574	82	17
5365-01-106-6578	39	31
	40	80
5330-01-106-6598	144	1
3020-01-106-6600	73	55
2590-01-106-6606	38	28
2590-01-106-6607	38	26
4720-01-106-6616	BULK	13
3040-01-106-6619	124	3
7690-01-106-6624	157	2
7690-01-106-6626	27	28
	28	32
5342-01-106-6632	7	2
9390-01-106-6645	123	16
3040-01-106-7301	38	131
5315-01-106-7421	38	129
2590-01-106-7432	39	47
	40	77
2590-01-106-7433	39	54
	40	89
4730-01-106-7791	86	9
4730-01-106-7797	73	46
2815-01-106-7798	73	42
3040-01-106-7799	73	12
3040-01-106-7802	73	41
3010-01-106-7803	73	38
3040-01-106-7809	38	78
3040-01-106-7810	38	81
3040-01-106-7811	38	85
3040-01-106-7812	38	80
5340-01-106-7813	38	83
5340-01-106-7814	38	77
5340-01-106-7817	38	95
5330-01-106-7820	73	66
	86	21
5365-01-106-7821	73	16
2510-01-106-7827	19	10
5365-01-106-7828	73	80
	86	40
5340-01-106-7829	21	8
	201	8
5342-01-106-7830	21	3
	201	6
5340-01-106-7843	73	48
6220-01-106-7845	169	12
2590-01-106-7847	22	5
5340-01-106-7849	15	45
2540-01-106-7851	15	17
5340-01-106-7856	15	55
2540-01-106-7857	15	48
6150-01-106-7910	100	3
	108	3
6150-01-106-7911	100	63
	108	82
6150-01-106-7912	100	12
	108	9
5310-01-106-7920	73	10
5315-01-106-7922	2	49
5315-01-106-7923	19	5
5360-01-106-7931	15	46
5360-01-106-7932	39	22
	40	50
5330-01-106-7940	73	1

STOCK NUMBER	FIG.	ITEM
5330-01-106-7941	73	24
6150-01-106-7943	59	11
6150-01-106-7945	95	22
	103	22
6150-01-106-7946	100	55
	108	74
6150-01-106-7947	100	56
	108	75
5340-01-106-7951	155	4
5310-01-106-7956	21	2
	201	1
5306-01-106-7959	22	9
5306-01-106-7960	15	8
5305-01-106-7961	38	86
5340-01-106-7963	15	14
5315-01-106-7968	21	1
	201	20
5325-01-106-7977	1	1
	25	24
	25	26
	40	33
	305	71
5365-01-106-7979	73	73
	86	29
5365-01-106-7980	29	65
	30	12
	31	44
5365-01-106-7981	22	7
5310-01-106-7986	38	127
5310-01-106-7988	73	11
5310-01-106-7989	31	43
5315-01-106-7992	73	94
5340-01-106-8001	22	8
	193	17
	194	20
5340-01-106-8002	22	10
	193	19
	194	21
5365-01-106-8016	29	66
5330-01-106-8022	25	27
5340-01-106-8025	15	41
5365-01-106-8026	73	15
5365-01-106-8028	73	83
	86	25
5365-01-106-8029	73	101
5365-01-106-8030	73	57
	86	37
5365-01-106-8031	73	89
	86	41
5340-01-106-8044	154	49
3040-01-106-8047	73	18
3110-01-106-8059	73	86
	86	44
3120-01-106-8060	73	79
	86	39
3040-01-106-8062	38	110
2590-01-106-8072	38	29
2540-01-106-8074	33	9
3110-01-106-8077	73	81
5340-01-106-8080	32	2
	33	16
5340-01-106-8082	15	49
3010-01-106-8083	73	39
3040-01-106-8084	73	53
	86	35
3040-01-106-8085	73	74

STOCK NUMBER	FIG.	ITEM
	86	31
5365-01-106-8089	73	90
7690-01-106-8106	157	7
	290	5
	[redacted]	[redacted]
7690-01-106-8111	168	8
7690-01-106-8118	158	47
5365-01-106-8122	15	40
5365-01-106-8124	15	12
3040-01-106-8127	73	9
3020-01-106-8128	73	13
3040-01-106-8135	73	35
5340-01-106-8137	73	49
	86	3
5340-01-106-8138	73	102
2930-01-106-8139	19	2
3040-01-106-8141	73	23
5342-01-106-8147	32	6
6150-01-106-8195	59	89
3040-01-106-8197	73	7
3040-01-106-8199	73	2
2990-01-106-8202	82	24
5640-01-106-8212	154	6
2990-01-106-8213	154	10
5365-01-106-9916	182	46
5340-01-107-1835	139	2
	140	2
3040-01-107-2360	235	3
5365-01-107-2558	181	35
5365-01-107-2559	182	17
5365-01-107-2562	181	22
5365-01-107-2961	181	36
	182	42

STOCK NUMBER	FIG.	ITEM
	182	42
5340-01-107-3177	137	9
2510-01-107-3182	141	4
5340-01-107-3186	120	4
5340-01-107-3187	120	9
5342-01-107-3188	129	5
4820-01-107-3190	117	25
5340-01-107-3191	117	45
5340-01-107-3192	118	10
5340-01-107-3194	118	7
	119	70
5342-01-107-3195	117	57
5340-01-107-3196	117	59
5340-01-107-3198	117	49
5340-01-107-3199	118	3
	119	77
4730-01-107-3202	117	3
5342-01-107-3207	117	73
5340-01-107-3208	117	48
5340-01-107-3209	118	18
5340-01-107-3210	118	22
5340-01-107-3213	118	26
2910-01-107-3214	118	41
5340-01-107-3216	139	32
	140	20
2540-01-107-3217	139	21
2540-01-107-3219	137	3
5342-01-107-3222	137	29
2540-01-107-3223	137	18
2540-01-107-3224	137	16
5306-01-107-3287	118	8
5315-01-107-3288	137	17
5315-01-107-3289	25	133

STOCK NUMBER	FIG.	ITEM
	141	5
5315-01-107-3291	137	24
6680-01-107-3296	118	15
	119	15
5340-01-107-3301	137	14
5360-01-107-3305	139	10
	140	10
5330-01-107-3310	141	41
5330-01-107-3316	141	7
5306-01-107-3333	118	42
5340-01-107-3337	141	3
4820-01-107-3338	117	7
5365-01-107-3353	139	29
	140	17
3120-01-107-3354	139	24
	140	12
5310-01-107-3356	83	11
5306-01-107-3359	139	6
	140	6
5315-01-107-3363	139	15
5340-01-107-3368	118	45
	119	31
4320-01-107-3369	141	30
2540-01-107-3371	137	2
4730-01-107-3372	117	38
	317	3
5342-01-107-3375	117	69
5340-01-107-3377	137	30
2910-01-107-3385	117	53
3040-01-107-3397	83	12
2540-01-107-3398	137	1
5365-01-107-3399	117	66
5365-01-107-3400	117	70
7690-01-107-3401	118	19
	119	64
7690-01-107-3402	117	1
	118	27
	119	61
7690-01-107-3404	95	57
	103	59
	110	23
	157	16
7690-01-107-3405	95	59
	103	57
	110	21
	157	17
7690-01-107-3408	95	60
	103	56
	110	20
	157	13
7690-01-107-3410	166	1
4730-01-107-3423	141	8
5340-01-107-3424	120	1
	121	5
5340-01-107-3426	117	55
	118	16
5340-01-107-3427	139	5
	140	5
9905-01-107-3429	128	8
3130-01-107-3430	129	1
4710-01-107-3438	141	35
4710-01-107-3440	141	19
4710-01-107-3445	141	46
2540-01-107-3453	135	5
6150-01-107-3455	118	53
	119	33

STOCK NUMBER	FIG.	ITEM
5340-01-107-3844	181	56
1005-01-107-5644	199	23
5340-01-107-5646	181	49
1005-01-107-5649	199	12
1005-01-107-5652	182	28
5342-01-107-5732	33	1
1005-01-107-7465	227	25
5365-01-107-7569	182	3
9515-01-107-9685	29	62
6150-01-107-9908	59	47
5340-01-107-9945	154	40
5340-01-107-9971	12	3
5340-01-107-9972	120	8
	121	3
4935-01-108-0442	325	7
4935-01-108-2968	325	8
5340-01-108-4889	238	19
3040-01-108-4911	238	26
3040-01-108-4963	255	33
3040-01-108-4981	237	22
3020-01-108-4988	235	16
5365-01-108-4992	182	50
5342-01-108-5016	117	50
[redacted]	[redacted]	[redacted]
2540-01-108-5055	37	1
5340-01-108-5093	135	1
2910-01-108-5096	62	281
2910-01-108-5097	62	278
3110-01-108-5161	90	7
3110-01-108-5162	90	20
[redacted]	[redacted]	[redacted]
4730-01-108-5253	117	74
5340-01-108-5281	195	5

STOCK NUMBER	FIG.	ITEM
	196	5
[redacted]	[redacted]	[redacted]
2815-01-108-5386	62	36
	238	83
5315-01-108-5511	199	8
	200	11
5310-01-108-7548	237	54
5340-01-108-7912	238	47
5310-01-108-8404	180	2
4140-01-108-9076	73	59
5430-01-108-9085	57	8
5360-01-108-9243	126	55
5310-01-108-9259	53	23
4330-01-108-9296	KITS	1
5340-01-108-9300	195	7
	196	7
2530-01-108-9330	46	11
3040-01-109-1452	238	16
1005-01-109-1559	139	12
	199	11
	200	13
5340-01-109-1574	182	48
5340-01-109-1575	181	21
4810-01-109-1735	68	1
4820-01-109-1760	65	24
2815-01-109-1772	62	45
2815-01-109-1773	62	34
2815-01-109-1774	62	23
6620-01-109-1906	65	4
	71	2
5330-01-109-1926	65	30
	69	7
	70	5

STOCK NUMBER	FIG.	ITEM
	235	109
5310-01-109-1978	65	39
5340-01-109-2070	65	29
	69	3
	235	117
3040-01-109-2559	62	107
2815-01-109-2560	62	101
2815-01-109-2561	62	274
4710-01-109-3076	62	301
9515-01-109-4301	29	63
2940-01-109-4355	65	1
5340-01-109-4360	72	4
5365-01-109-4361	72	1
2990-01-109-4395	62	297
5360-01-109-4433	68	3
5360-01-109-4442	72	3
5330-01-109-4459	65	21
5330-01-109-4461	60	37
	65	36
3110-01-109-4485	65	34
[redacted]	[redacted]	[redacted]
4330-01-109-4529	65	13
4810-01-109-4601	68	5
5340-01-109-4672	227	18
5340-01-109-4673	227	2
9320-01-109-4736	62	35
3040-01-109-4776	255	55
5340-01-109-4783	255	27
5365-01-109-4785	181	18
5365-01-109-4786	181	19
2930-01-109-6356	62	234
5306-01-109-6716	58	13
	73	70

STOCK NUMBER	FIG.	ITEM
	86	27
5306-01-109-6717	73	61
	86	16
5340-01-109-6808	69	1
	235	47
1005-01-109-6866	227	3
1005-01-109-6867	227	23
3040-01-109-6954	255	30
5340-01-109-6955	182	44
5340-01-109-6963	205	13
5365-01-109-7075	227	47
5365-01-109-7076	227	46
5365-01-109-7095	182	49
4730-01-109-7618	62	186
5930-01-109-7960	59	31
5930-01-109-7961	97	1
	105	1
5340-01-109-8012	98	3
	106	3
4820-01-109-8014	57	55
5306-01-109-8067	73	5
5340-01-109-8089	231	1
5340-01-109-8098	213	1
9905-01-109-8111	186	5
3040-01-109-8601	62	283
4730-01-109-9992	62	145
5306-01-110-1129	73	51
	86	6
3020-01-110-1350	62	8
5340-01-110-3297	205	11
1005-01-110-3408	191	9
1005-01-110-3421	213	30
5340-01-110-3459	181	62

STOCK NUMBER	FIG.	ITEM
	182	19
5340-01-110-3533	255	14
3020-01-110-3577	64	2
5342-01-110-3963	60	5
	61	13
2590-01-110-3969	57	64
2940-01-110-3970	61	24
5340-01-110-3972	57	84
5340-01-110-3973	57	60
4330-01-110-3976	152	1
2510-01-110-3979	58	28
2510-01-110-3980	58	27
2540-01-110-3984	146	57
5340-01-110-3999	132	59
	133	76
2540-01-110-4002	132	36
	133	22
2940-01-110-4017	146	43
5340-01-110-4018	146	22
5340-01-110-4019	146	51
5340-01-110-4020	146	60
5340-01-110-4027	151	11
5340-01-110-4031	57	69
2510-01-110-4032	58	31
2990-01-110-4042	61	43
5340-01-110-4043	96	1
	104	1
5340-01-110-4046	146	38
5365-01-110-4048	60	47
5340-01-110-4049	275	22
5930-01-110-4213	97	2
	105	2
5930-01-110-4214	132	70
5315-01-110-4224	132	34
	133	34
4730-01-110-4229	60	52
5340-01-110-4231	132	21
5360-01-110-4234	19	6
5330-01-110-4237	57	3
3120-01-110-4259	132	30
	133	20
5310-01-110-4261	58	33
5310-01-110-4263	132	75
	133	113
5340-01-110-4268	59	27
	60	65
5340-01-110-4274	97	20
	105	29
4720-01-110-4275	57	66
2540-01-110-4279	151	4
5305-01-110-4281	57	78
5970-01-110-4282	94	41
	102	41
5365-01-110-4286	132	7
	133	42
5340-01-110-4287	132	60
	133	77
5340-01-110-4288	132	23
	133	6
5340-01-110-4289	132	39
	133	25
5340-01-110-4291	132	22
	133	33
3040-01-110-4313	132	40
	133	26

STOCK NUMBER	FIG.	ITEM
4720-01-110-4315	BULK	14
4730-01-110-4316	61	3
4730-01-110-4317	61	29
4730-01-110-4319	60	26
3040-01-110-4320	59	18
4820-01-110-4333	60	28
4730-01-110-4334	60	11
4730-01-110-4335	57	67
5310-01-110-4337	94	42
	102	42
4720-01-110-4348	146	40
4710-01-110-4363	57	56
5307-01-110-4384	234	14
5340-01-110-4385	235	86
5330-01-110-5409	235	62
5342-01-110-5423	213	7
3040-01-110-5477	255	68
1005-01-110-5551	235	22
5340-01-110-5552	228	4
3040-01-110-5590	235	108
5360-01-110-5686	237	51
5360-01-110-5687	235	96
	237	2
	255	91
9905-01-110-7606	186	4
1005-01-110-7632	229	1
1005-01-110-7633	223	26
5306-01-110-7884	38	79
5342-01-110-9200	146	52
3110-01-110-9813	255	35
3110-01-110-9814	235	61
9905-01-110-9863	221	13
3040-01-110-9871	215	1
3040-01-110-9873	235	65
	255	5
1005-01-110-9898	223	6
3010-01-110-9941	255	6
2540-01-110-9951	207	6
2540-01-110-9952	207	7
5340-01-110-9956	255	17
5340-01-110-9957	255	37
5306-01-111-2771	90	38
5315-01-111-2912	73	54
	86	34
5306-01-111-3518	90	10
	238	5
5365-01-111-3671	55	9
5310-01-111-3981	238	75
1005-01-111-4002	235	51
1005-01-111-4010	214	3
	218	14
3020-01-111-4037	227	43
3040-01-111-4062	205	4
5365-01-111-4071	221	10
5365-01-111-4073	191	5
5330-01-111-4510	238	68
	255	29
3040-01-111-4741	255	96
1005-01-111-4837	227	50
6105-01-111-4892	234	17
	254	10
5325-01-111-4968	229	3
6160-01-111-5440	95	1
	103	1
3110-01-111-5583	238	41
	255	40

STOCK NUMBER	FIG.	ITEM
5340-01-111-5605	240	4
7690-01-111-5668	227	4
1005-01-111-5722	81	19
	239	10
1005-01-111-5724	256	6
1005-01-111-5725	237	35
1005-01-111-5726	237	9
1005-01-111-5727	255	73
1005-01-111-5728	237	42
5330-01-111-5859	223	1
5330-01-111-7404	62	279
5330-01-111-7405	62	16
3120-01-111-7420	62	277
9905-01-111-7758	214	4
9905-01-111-7759	214	1
1005-01-111-7787	224	5
1005-01-111-7789	235	31
	237	63
5330-01-111-9297	62	275
5365-01-112-1547	64	1
5307-01-112-1598	237	19
5340-01-112-1601	237	70
5340-01-112-1602	255	60
1005-01-112-1625	227	54
1005-01-112-1626	227	27
3040-01-112-1664	215	5
3040-01-112-1665	231	6
5365-01-112-1681	223	12
3120-01-112-1737	64	3
6685-01-112-2334	59	42
5315-01-112-2595	213	28
5935-01-112-3631	192	7
9905-01-112-3911	255	50
5315-01-112-3915	232	12
5315-01-112-3916	237	5
1005-01-112-3940	221	14
1005-01-112-3949	236	20
5360-01-112-3982	229	11
2540-01-112-3988	199	22
5340-01-112-3994	227	45
5306-01-112-4277	62	20
5325-01-112-4302	62	289
5310-01-112-4305	62	192
5305-01-112-4312	62	157
5340-01-112-5149	181	43
	182	32
5340-01-112-5150	215	2
5310-01-112-6118	255	25
9905-01-112-6249	236	24
1005-01-112-6269	235	67
1005-01-112-6270	223	4
1005-01-112-6276	212	6
5340-01-112-6277	224	3
1005-01-112-6278	239	13
1005-01-112-6279	81	29
	239	15
1005-01-112-6280	81	3
	239	9
1005-01-112-6281	237	56
1005-01-112-6282	239	14
1005-01-112-6285	234	12
3040-01-112-6381	255	84
5310-01-112-6652	73	32
5340-01-112-7793	62	121
3110-01-112-8008	238	2
	255	22

STOCK NUMBER	FIG.	ITEM
5340-01-112-8198	237	29
	255	53
3040-01-112-8254	237	11
5340-01-112-8270	229	2
5340-01-112-8487	191	11
3120-01-112-8488	237	58
4140-01-112-8519	270	5
	274	10
1005-01-112-8553	237	68
1005-01-112-8557	239	16
	240	5
1005-01-112-8559	236	19
1005-01-112-8560	81	53
	239	7
	240	6
[redacted]	[redacted]	[redacted]
	[redacted]	[redacted]
5340-01-112-8600	207	8
5340-01-112-8613	235	54
5340-01-112-8614	235	57
5306-01-112-8681	27	42
	28	48
5306-01-112-8682	100	28
	108	26
	109	1
3130-01-112-9663	23	1
5340-01-112-9688	35	2
5340-01-112-9693	27	18
	28	18
5305-01-113-0408	62	46
5340-01-113-0667	213	5
6680-01-113-1023	55	6
2540-01-113-1025	146	42

STOCK NUMBER	FIG.	ITEM
5340-01-113-1056	153	20
9515-01-113-1077	146	12
5306-01-113-1100	95	3
	103	3
5315-01-113-1105	55	15
6160-01-113-1140	95	12
	103	12
4720-01-113-1175	61	1
2540-01-113-1178	153	19
7690-01-113-1215	95	61
	103	60
	110	19
	157	18
5340-01-113-1226	151	5
	153	8
3130-01-113-1235	73	58
	86	13
2940-01-113-1248	146	37
5930-01-113-1347	235	89
1005-01-113-1450	236	12
3010-01-113-1452	254	2
1005-01-113-1453	235	37
5999-01-113-1506	235	100
	237	34
5340-01-113-1527	268	21
	276	22
5340-01-113-1529	236	18
4730-01-113-1646	154	65
5331-01-113-2084	42	33
	43	43
	44	43
5330-01-113-2199	62	25
5330-01-113-2200	62	230

STOCK NUMBER	FIG.	ITEM
5330-01-113-2201	62	235
3120-01-113-2315	221	2
5315-01-113-2357	199	31
5365-01-113-2540	237	47
1005-01-113-3766	178	11
	179	6
5995-01-113-3778	272	1
	278	1
5340-01-113-3829	238	4
5325-01-113-5609	1	3
3110-01-113-8287	227	29
	227	41
5306-01-113-9748	238	57
[redacted]	[redacted]	[redacted]
1005-01-114-0066	223	16
5995-01-114-0117	272	2
	278	2
5340-01-114-0207	236	4
5306-01-114-0610	73	60
5306-01-114-0963	235	71
5360-01-114-2292	199	24
1005-01-114-2298	191	19
1005-01-114-2299	232	3
1005-01-114-3074	193	28
	194	32
5935-01-114-3834	240	1
3110-01-114-3849	238	65
[redacted]	[redacted]	[redacted]
5306-01-114-5125	73	47
5305-01-114-6386	62	27
[redacted]	[redacted]	[redacted]
5120-01-114-7392	305	9
2530-01-114-7393	319	74
4140-01-114-7417	55	16
6150-01-114-7612	316	3
6150-01-114-7613	316	2
6680-01-114-7623	59	62
2590-01-114-7642	316	4
2590-01-114-7643	316	5
[redacted]	[redacted]	[redacted]
[redacted]	[redacted]	[redacted]
4720-01-114-7686	BULK	12
2520-01-114-7689	55	25
7690-01-114-7734	158	55
	159	49
4720-01-114-7754	127	45
2590-01-114-7765	57	4
2520-01-114-9499	238	49
5365-01-114-9505	237	57
1005-01-115-0926	235	116
5365-01-115-1104	255	79
5120-01-115-1811	305	15
5120-01-115-1812	305	17
4710-01-115-1868	57	21
4730-01-115-1888	57	85
5120-01-115-1891	305	10
5120-01-115-1892	305	43
5120-01-115-1893	305	16
9999-01-115-1895	305	55
5306-01-115-1920	235	35
3110-01-115-1989	255	49
5315-01-115-2061	232	15
2540-01-115-2397	35	3
5975-01-115-3003	271	12
	275	13
5120-01-115-3093	319	2

STOCK NUMBER	FIG.	ITEM
5120-01-115-3095	319	2
5120-01-115-3096	319	2
5120-01-115-3098	319	2
5120-01-115-3100	319	2
5120-01-115-3101	319	5
5120-01-115-3104	319	5
5120-01-115-3105	319	5
5120-01-115-3106	319	5
5120-01-115-3107	319	5
5120-01-115-3110	319	5
5120-01-115-3111	319	5
5120-01-115-3112	319	5
5120-01-115-3113	319	4
5120-01-115-3114	319	4
5120-01-115-3116	319	22
4933-01-115-3119	319	6
4933-01-115-3120	319	14
4933-01-115-3121	319	28
4933-01-115-3122	319	25
4933-01-115-3123	319	26
5365-01-115-3125	305	90
5120-01-115-3131	319	1
5120-01-115-3132	319	1
5120-01-115-3134	319	1
5120-01-115-3135	319	21
5120-01-115-3136	319	1
5120-01-115-3137	319	1
5120-01-115-3139	319	1
5120-01-115-3140	319	1
5120-01-115-3141	319	1
5120-01-115-3142	319	1
5120-01-115-3143	319	1
5999-01-115-3255	235	80
	256	5
5940-01-115-3264	178	10
	179	5
	232	4
3020-01-115-3975	215	6
5120-01-115-4920	305	13
5120-01-115-4943	305	18
4720-01-115-4990	316	1
5330-01-115-5390	235	85
5307-01-115-5403	305	91
1005-01-115-5442	178	13
4931-01-115-5443	327	3
3020-01-115-5597	235	1
4910-01-115-6282	305	36
4910-01-115-6283	305	115
4910-01-115-6284	325	3
1005-01-115-9003	193	14
	194	17
5120-01-115-9810	319	12
5340-01-116-0086	60	46
5340-01-116-0087	60	23
3040-01-116-0314	132	62
	133	79
4931-01-116-3169	313	1
4931-01-116-3170	313	3
4933-01-116-3171	327	1
1005-01-116-3172	193	24
	194	28
5360-01-116-3201	129	25
1005-01-116-3274	172	11
5935-01-116-4447	81	22
	239	4
5935-01-116-4448	237	32

STOCK NUMBER	FIG.	ITEM
7510-01-116-4528	177	1
3040-01-116-8156	235	5
5340-01-116-8165	235	12
5340-01-116-8188	236	5
5340-01-116-9138	27	45
	28	51
5935-01-117-0029	235	78
3110-01-117-2437	238	71
3110-01-117-2438	238	81
3110-01-117-2439	238	66
5340-01-117-3561	193	11
5120-01-117-3604	305	74
5365-01-117-5208	235	82
	256	11
3040-01-117-5224	305	87
5342-01-117-6663	58	32
8465-01-117-8699	176	8
5306-01-117-9415	238	15
5306-01-117-9416	238	64
5310-01-117-9450	238	6
5340-01-117-9773	237	75
5930-01-117-9780	237	25
5365-01-117-9880	255	34
5342-01-118-0181	83	2
5305-01-118-1480	305	89
5315-01-118-1575	237	43
5360-01-118-1735	238	44
5306-01-118-2445	235	42
	238	13
	257	16
5315-01-118-2597	305	88
5315-01-118-2598	235	97
	237	1
	255	92
4910-01-118-2879	305	27
5306-01-118-3133	236	2
3020-01-118-3680	237	60
3020-01-118-3681	235	24
3020-01-118-3682	235	43
5935-01-118-5731	256	1
5998-01-118-5966	149	16
5340-01-118-5967	149	6
5995-01-118-6043	108	12
1005-01-118-7515	213	15
4910-01-118-7711	305	34
	BULK	16
	BULK	27
	BULK	6
5315-01-118-7899	2	45
4730-01-118-8278	55	8
3110-01-118-8585	223	5
1005-01-118-8602	192	3
3110-01-118-8604	235	105
5340-01-118-8617	205	3
5305-01-118-8826	62	123
3040-01-119-1240	182	29
1005-01-119-5644	214	5
	218	15
5342-01-119-5677	57	36
4710-01-119-5851	57	33
1640-01-119-5979	229	5
5306-01-119-6763	234	8
	236	25
	254	5
5120-01-119-7240	305	104
1005-01-119-7254	305	109

STOCK NUMBER	FIG.	ITEM
5340-01-119-7731	58	46
6150-01-119-7807	59	48
5330-01-119-7880	223	2
5306-01-119-9321	235	18
	237	7
	238	30
	255	20
6625-01-120-0764	325	11
5120-01-120-2894	305	14
5120-01-120-3027	319	68
5305-01-120-3037	132	66
	133	83
4820-01-120-4532	57	104
	59	43
2520-01-120-9805	55	35
4710-01-120-9870	57	18
1005-01-121-9672	216	4
5340-01-122-2238	150	3
5330-01-122-2294	148	2
2590-01-122-2369	150	5
7690-01-122-2373	150	2
5365-01-122-2375	149	15
5999-01-122-2430	149	2
4720-01-122-4279	60	27
4720-01-122-4280	60	54
4720-01-122-5863	61	36
5365-01-122-6179	2	9
5365-01-122-6180	2	4
5340-01-122-9745	193	20
	194	24
4720-01-122-9843	132	91
6220-01-123-1353	114	6
	280	6

STOCK NUMBER	FIG.	ITEM
5930-01-123-2909	59	54
5340-01-123-4980	181	1
2540-01-123-6839	31	40
5340-01-124-2465	235	33
5330-01-124-5157	68	4
3120-01-124-5186	58	43
5330-01-124-6384	65	31
	69	6
	70	6
	235	39
9905-01-124-9300	73	97
	86	49
	90	18
	177	6
5935-01-124-9309	150	4
2520-01-124-9310	79	1
	88	1
5330-01-124-9314	15	1
5340-01-125-0547	55	32
5340-01-125-0548	55	28
4520-01-125-0555	154	23
2540-01-125-0569	135	3
3040-01-125-0570	132	50
	133	67
6150-01-125-0572	100	1
	108	1
5365-01-125-0579	39	5
5340-01-125-0585	39	15
5340-01-125-0586	39	38
5340-01-125-0591	161	10
4730-01-125-0592	73	34
2590-01-125-0604	39	28
3040-01-125-0607	161	6

STOCK NUMBER	FIG.	ITEM
4720-01-125-0610	154	33
7690-01-125-0613	161	15
5340-01-125-0618	39	3
	40	15
5340-01-125-0619	132	46
	133	64
4710-01-125-0620	141	34
5930-01-125-4087	149	5
5930-01-125-4088	149	1
5340-01-125-4089	58	49
5315-01-125-4093	39	42
2540-01-125-4094	39	40
5306-01-125-4098	129	28
5930-01-125-4167	150	6
4010-01-125-4244	14	5
	21	6
	127	65
	170	22
	201	9
5310-01-125-4250	39	6
5330-01-125-4269	15	9
2540-01-125-6154	155	22
5310-01-126-1644	127	6
[redacted]	[redacted]	[redacted]
	[redacted]	[redacted]
1005-01-126-7801	190	3
2590-01-126-7812	181	61
1005-01-126-7813	182	31
1005-01-126-7814	183	16
2590-01-126-7818	183	13
5975-01-126-7820	183	1
5342-01-126-7821	183	19
3110-01-126-7823	235	36
5365-01-126-7828	182	30
5310-01-126-7829	235	56
1005-01-126-7832	186	6
5330-01-126-7833	227	30
5340-01-126-7834	227	33
5340-01-126-7835	178	12
	179	7
5330-01-126-7836	227	37
5340-01-126-7837	227	31
3040-01-126-7838	254	9
2540-01-126-7841	199	25
	200	30
2815-01-126-9366	63	15
4720-01-126-9762	58	17
5360-01-127-0954	129	30
5340-01-127-1422	183	24
4720-01-127-6702	117	32
5120-01-128-1286	319	3
5120-01-128-1287	319	3
5120-01-128-1288	319	3
4933-01-128-1362	319	27
5365-01-128-1423	62	146
4730-01-128-2272	141	51
4910-01-128-2669	305	38
4910-01-128-2670	305	28
5120-01-128-2671	319	66
4910-01-128-2673	305	54
5120-01-128-2674	319	75
6635-01-128-2676	319	34
5120-01-128-2677	319	32
5365-01-128-2684	319	55
4910-01-128-2689	319	57
4910-01-128-2691	319	35

STOCK NUMBER	FIG.	ITEM
5120-01-128-2758	319	64
5120-01-128-2782	319	54
9999-01-128-2783	319	29
5120-01-128-2865	305	47
5120-01-128-2867	305	48
5342-01-128-8707	62	51
2990-01-128-9635	62	21
3040-01-128-9812	186	2
5325-01-129-0842	246	15
1240-01-129-0845	251	3
5340-01-129-0861	249	9
6650-01-129-0935	247	10
	251	16
1240-01-129-0999	250	3
1240-01-129-1000	252	5
2520-01-129-2159	55	36
2520-01-129-2160	55	27
3040-01-129-2164	39	19
5120-01-129-2433	319	3
5120-01-129-2434	319	15
5120-01-129-2435	319	15
5120-01-129-2436	319	15
5120-01-129-2536	319	23
5120-01-129-2537	319	19
5305-01-129-4214	62	134
5305-01-129-4215	62	164
5305-01-129-4216	62	193
5305-01-129-4217	62	31
5305-01-129-4384	62	265
5365-01-129-5751	181	34
	182	41
5985-01-129-5991	255	7
5340-01-129-6088	182	2
5340-01-129-6089	182	1
5340-01-129-6090	181	37
5340-01-129-6091	181	42
7690-01-129-6095	95	58
	103	58
	110	22
5342-01-130-0948	57	70
3120-01-130-3289	190	42
3020-01-130-3392	62	7
3020-01-130-3659	235	29
5120-01-130-5696	305	101
5340-01-130-6020	165	17
5325-01-130-6275	246	11
1240-01-131-0321	247	1
5360-01-131-1932	126	19
5340-01-131-1937	305	42
5970-01-131-2221	247	8
	251	17
6650-01-131-2570	250	4
1240-01-131-5319	252	1
1240-01-131-5320	248	8
[redacted]	[redacted]	[redacted]
	[redacted]	[redacted]
5360-01-131-8222	247	17
4720-01-131-9586	317	2
3040-01-132-0993	73	76
	86	33
4730-01-132-1183	61	34
5120-01-132-1387	319	2
5330-01-132-1549	246	9
5330-01-132-1552	246	5
5330-01-132-1553	246	7
5330-01-132-1554	247	11

STOCK NUMBER	FIG.	ITEM
	251	18
5330-01-132-1555	247	14
5330-01-132-1556	251	7
5306-01-132-3369	55	26
5360-01-132-8923	139	16
5340-01-133-5381	60	67
	61	42
5340-01-133-5382	14	15
2540-01-133-5430	137	5
5975-01-133-8441	227	5
3020-01-133-8835	238	25
3110-01-134-0796	249	4
	251	6
5310-01-134-3287	186	8
5340-01-134-3719	159	22
4730-01-134-3733	134	18
2940-01-134-3742	134	62
5315-01-134-3780	132	55
	133	72
5315-01-134-3781	132	48
	133	66
5365-01-134-3783	134	52
5365-01-134-3784	134	66
5330-01-134-3786	82	22
5325-01-134-3789	82	21
5315-01-134-3793	113	15
	167	5
	172	72
	[redacted]	[redacted]
	[redacted]	[redacted]
5307-01-134-3799	134	14
4320-01-134-3823	134	72
4330-01-134-6531	132	71
	133	108
4730-01-134-6558	154	66
3120-01-134-6572	126	37
4720-01-134-6575	57	12
5342-01-134-6577	95	47
	103	46
	109	66
4710-01-134-6583	57	79
4710-01-134-6584	57	61
3040-01-134-6589	73	103
5340-01-134-8249	62	198
5340-01-134-8250	62	303
3110-01-134-8287	53	20
5360-01-134-8296	2	46
3130-01-134-8709	53	10
1240-01-134-8933	248	5
4140-01-135-0998	146	45
6650-01-135-2130	250	2
6650-01-135-2131	252	2
4910-01-135-4379	325	1
6625-01-135-4389	325	2
6695-01-135-4758	59	33
5340-01-135-4763	62	290
5940-01-135-7091	239	17
	240	14
4730-01-135-8310	90	19
5342-01-136-0989	126	57
5330-01-136-1117	134	70
5330-01-136-1121	118	33
5365-01-136-1172	126	30
5310-01-136-1175	123	34
5330-01-136-1205	126	9
3040-01-136-1207	126	62

STOCK NUMBER	FIG.	ITEM
3040-01-136-1208	126	29
5305-01-136-1724	237	24
5940-01-136-2540	192	2
4330-01-136-4446	KITS	22
2930-01-136-4625	62	187
6650-01-136-4634	134	22
5360-01-136-4655	134	49
5330-01-136-4663	134	68
3040-01-136-4666	134	59
3120-01-136-4667	39	11
5330-01-136-4675	146	16
4730-01-136-4685	59	75
5365-01-136-4686	15	28
5965-01-136-4781	157	26
5360-01-136-4870	129	69
6650-01-136-5230	252	4
6650-01-136-7597	252	6
5340-01-136-7630	39	21
3040-01-136-7633	25	37
2590-01-136-7636	18	1
5365-01-136-7665	39	20
	40	46
5365-01-136-7675	25	36
5340-01-136-7680	39	41
5340-01-136-7683	39	63
	40	60
5340-01-136-7684	12	10
5945-01-137-5148	149	14
5305-01-137-7047	63	14
5365-01-138-2263	39	17
5360-01-138-3948	38	128
5120-01-138-4093	305	75
5330-01-138-4848	142	13
7690-01-138-7170	157	12
5120-01-138-7557	319	31
5310-01-139-1427	235	92
	237	27
	237	39
	255	65
	271	31
	275	35
5977-01-139-1812	142	15
	143	15
3110-01-139-3311	235	87
3110-01-139-3312	235	7
3110-01-139-3313	255	12
5340-01-140-4525	14	9
9510-01-140-4526	14	12
5315-01-140-4527	14	13
4820-01-140-4528	14	11
9515-01-140-4533	30	26
5325-01-140-4534	29	64
	30	1
5305-01-140-4547	38	87
5310-01-140-4555	49	1
5365-01-140-4594	15	52
3130-01-140-4598	73	87
	86	43
5307-01-140-5732	73	93
5365-01-140-6527	39	61
	40	58
2510-01-140-6528	39	62
	40	88
5330-01-140-6554	12	22
5330-01-140-6555	12	17
5330-01-140-6556	BULK	41

STOCK NUMBER	FIG.	ITEM
5365-01-140-6570	39	51
	40	83
2930-01-140-8217	78	2
4730-01-140-8250	60	45
5305-01-140-9118	25	51
	27	24
	28	30
	38	60
	39	71
	40	69
	57	6
	81	12
	126	43
	146	18
	170	20
	187	27
	188	5
	189	14
	212	4
	218	12
	271	72
	275	74
2590-01-141-0883	126	1
5340-01-141-3850	233	11
5342-01-141-5292	39	57
	40	54
5930-01-141-5368	235	90
	237	28
5310-01-142-0326	126	5
4910-01-142-3144	325	5
5975-01-142-3149	142	21
	143	21
5305-01-142-3189	142	23
	143	23
4140-01-142-3192	147	5
5365-01-142-3194	147	7
6105-01-142-3199	147	8
5330-01-142-3203	146	58
5365-01-142-3206	142	20
	143	20
5930-01-142-8272	123	21
5340-01-142-8287	14	2
5340-01-142-8295	15	21
4730-01-142-8524	62	203
4730-01-143-4536	59	57
5342-01-143-6046	62	268
9330-01-143-6255	BULK	52
3120-01-143-7493	161	26
5330-01-143-8207	62	84
5330-01-143-8208	62	63
5330-01-143-9215	235	58
5306-01-144-3080	181	26
5340-01-144-3235	233	15
3110-01-144-5699	52	13
5305-01-144-6233	62	96
3010-01-144-8061	235	64
5330-01-145-5160	73	65
	86	20
5310-01-145-8404	62	85
1005-01-145-9278	255	36
1005-01-145-9279	235	52
1005-01-145-9281	238	59
4320-01-146-8934	KITS	2
5306-01-147-1197	203	2
3110-01-147-2809	235	20
3110-01-147-2810	255	63

STOCK NUMBER	FIG.	ITEM
3110-01-147-2811	255	48
2510-01-147-5827	38	32
2510-01-147-5828	38	25
9515-01-147-5829	38	33
9515-01-147-5830	38	27
2540-01-147-5834	42	10
5342-01-147-5835	15	5
5360-01-147-5851	57	83
5310-01-147-5859	20	12
	183	8
5310-01-147-5860	15	35
5365-01-147-5868	15	4
3110-01-147-6005	255	83
3110-01-147-6006	255	19
5342-01-147-9961	107	55
	157	24
5310-01-148-0253	19	9
5340-01-148-1631	25	124
	141	17
5340-01-148-1640	123	20
2590-01-148-1647	141	12
5945-01-148-1654	95	44
	103	43
	109	63
4730-01-148-4531	117	24
5120-01-148-8882	319	10
5120-01-148-8883	319	17
5305-01-148-8884	305	76
2510-01-149-1280	132	41
	133	5
2540-01-149-1282	146	39
4140-01-149-1300	316	10
2835-01-149-1301	316	11
4910-01-149-1303	319	56
5120-01-149-1391	319	65
3040-01-149-3751	251	2
4730-01-149-4010	317	1
5360-01-149-5837	123	35
3110-01-149-5931	235	27
3110-01-149-5933	255	78
3110-01-149-5934	235	50
3110-01-149-5935	235	70
3110-01-149-5936	238	21
3110-01-149-5937	237	46
	238	29
	255	45
3110-01-149-5938	238	77
3110-01-149-5939	255	3
5340-01-149-8001	186	7
3040-01-149-8289	243	30
3040-01-149-8291	243	24
1005-01-149-8292	243	26
5340-01-149-8294	243	18
3040-01-149-8295	243	29
1005-01-149-8296	243	28
3040-01-149-8297	243	16
1005-01-149-8298	243	12
[redacted]	[redacted]	[redacted]
[redacted]	[redacted]	[redacted]
1005-01-149-8300	243	10
5330-01-149-8353	246	10
5340-01-149-8388	235	107
9905-01-149-8390	177	15
4730-01-150-0877	57	106
1005-01-150-5799	216	3
1005-01-150-5800	217	4

STOCK NUMBER	FIG.	ITEM
1005-01-150-5802	217	3
1005-01-150-5803	217	2
5306-01-150-8719	25	165
2940-01-150-9593	134	20
4730-01-150-9711	134	34
5310-01-150-9739	134	30
5305-01-150-9744	134	29
5305-01-150-9745	134	21
5305-01-150-9748	134	63
4730-01-151-2740	154	75
4730-01-151-2754	154	74
3110-01-151-6245	90	22
5330-01-151-6247	90	24
3110-01-151-6534	238	43
	255	41
5340-01-152-2388	129	38
5340-01-152-2390	155	28
5360-01-152-2453	129	36
5340-01-152-2967	97	22
	105	31
	275	21
3110-01-152-5441	235	66
4730-01-152-8861	134	35
5120-01-153-1860	305	96
5120-01-153-2794	305	100
5180-01-153-2795	305	111
3120-01-153-9601	221	4
3110-01-154-4356	73	92
8030-01-154-9255	118	73
4931-01-155-2676	[redacted]	[redacted]
	305	79
5120-01-155-2933	305	82
5999-01-155-5479	148	3
3110-01-155-7746	90	35
5306-01-155-8461	76	5
5305-01-156-5098	120	3
5306-01-156-5437	135	4
2540-01-157-1294	39	49
	40	94
5340-01-157-1295	39	79
	40	65
5340-01-157-1296	39	46
	40	76
9515-01-157-1299	29	61
9515-01-157-1300	29	77
2540-01-157-1301	29	57
5340-01-157-1302	29	80
2540-01-157-1303	36	1
2530-01-157-1304	42	47
5340-01-157-1384	27	3
	28	3
5365-01-157-1414	38	119
5365-01-157-1415	38	120
5365-01-157-1416	25	42
5365-01-157-1417	25	43
5365-01-157-1418	132	6
	133	40
5895-01-157-3077	268	17
	271	23
	275	27
	276	18
4730-01-157-8923	62	200
6680-01-158-3300	96	22
	104	22
6680-01-158-3301	96	21
	104	21

STOCK NUMBER	FIG.	ITEM
5306-01-158-3872	132	72
	133	109
4730-01-159-2739	62	322
5120-01-159-6487	305	64
5970-01-159-8667	59	79
5331-01-160-7457	77	1
4730-01-161-5115	62	5
5340-01-162-0430	318	5
5340-01-162-0662	38	62
9320-01-162-3712	BULK	26
	BULK	43
5330-01-162-3714	BULK	29
9320-01-162-3715	BULK	30
5330-01-162-3865	BULK	39
5330-01-162-3866	BULK	37
5330-01-162-3867	BULK	38
[redacted]	[redacted]	[redacted]
	[redacted]	[redacted]
[redacted]	[redacted]	[redacted]
	[redacted]	[redacted]
	[redacted]	[redacted]
	[redacted]	[redacted]
	[redacted]	[redacted]
5330-01-163-0607	62	42
5120-01-163-1425	305	62
6150-01-163-1432	95	50
	103	49
	109	69
5120-01-163-9922	305	63
5935-01-165-0485	310	2
4931-01-165-0486	310	4
4931-01-165-0487	310	3
5120-01-165-0488	305	67
6150-01-165-0532	310	5
5120-01-165-0557	305	29
5340-01-165-0585	97	27
	105	17
5342-01-165-0585	146	3
5330-01-165-2287	62	30
5305-01-165-2345	62	47
2540-01-165-4550	139	18
4730-01-165-9491	63	10
4910-01-166-2052	305	49
2510-01-166-5643	39	55
	40	90
5340-01-166-6379	57	92
9905-01-166-6386	60	24
5310-01-166-6393	52	4
5310-01-166-6395	52	3
1005-01-166-9652	193	7
	194	7
	270	32
	274	33
5342-01-167-0176	62	40
1005-01-167-4597	193	27
	194	31
4935-01-167-4723	325	9
1005-01-167-6468	216	2
5975-01-168-0471	[redacted]	[redacted]
	[redacted]	[redacted]
5330-01-168-4250	154	8
5340-01-169-7175	65	2
	71	1
5120-01-170-1925	319	2
5365-01-171-2840	181	58
5340-01-171-4668	171	19

STOCK NUMBER	FIG.	ITEM
4730-01-171-4734	63	9
1005-01-171-8316	227	1
5975-01-171-8355	[redacted]	[redacted]
	[redacted]	[redacted]
5120-01-172-2863	305	83
1005-01-172-2995	227	19
1005-01-172-3038	218	4
5365-01-172-3105	187	10
5365-01-172-3106	187	10
5365-01-172-3107	187	10
3040-01-172-3111	227	20
4710-01-172-7883	40	25
5365-01-172-7899	38	72
	193	15
	194	18
5310-01-172-7901	40	39
5365-01-172-7908	38	91
5340-01-172-7917	40	51
5340-01-172-7920	40	24
2540-01-172-7922	162	13
5340-01-172-7923	162	28
5340-01-172-7926	162	11
5340-01-172-7927	162	12
5330-01-172-7928	39	32
	40	81
3040-01-172-7929	40	49
5365-01-172-7930	40	84
5365-01-172-7931	40	79
5325-01-173-0704	73	28
	86	11
4730-01-173-9141	57	91
4730-01-174-0388	162	60
4730-01-174-0389	162	26
4710-01-174-0390	162	45
4710-01-174-0391	162	44
5330-01-174-4720	251	12
5305-01-174-5383	213	22
4710-01-174-5386	182	55
5340-01-174-9259	270	2
	274	7
5305-01-176-0883	144	13
1005-01-176-6085	212	1
1005-01-176-6086	212	2
5340-01-176-8798	187	9
3040-01-176-8800	319	11
3120-01-176-9802	127	78
1005-01-177-2665	213	10
5331-01-177-3435	87	4
5120-01-177-4059	319	2
5120-01-177-4060	319	5
5120-01-177-4061	319	5
5120-01-177-4062	319	5
3120-01-178-1323	243	6
5365-01-179-9715	187	10
6680-01-180-5640	65	22
5340-01-181-6326	129	39
5340-01-181-6450	162	30
2815-01-182-4166	86	28
5331-01-183-0972	238	45
5360-01-183-2705	39	58
	40	55
5360-01-183-2971	213	9
5306-01-183-9265	270	4
	274	9
2540-01-184-4801	137	23
5210-01-184-5003	319	18

STOCK NUMBER	FIG.	ITEM
5935-01-184-6264	311	15
5342-01-184-7658	57	10
	132	74
	133	112
5340-01-185-0165	132	13
	133	52
2510-01-185-0166	132	4
3040-01-185-0493	126	10
5330-01-185-0501	BULK	34
3040-01-185-5888	126	18
	270	30
	271	18
	274	32
	275	19
3120-01-186-3510	132	69
	133	86
5330-01-186-5856	114	5
	280	5
5340-01-186-7187	62	17
5915-01-186-7952	147	1
5930-01-186-8300	241	16
5120-01-187-0384	319	67
4030-01-187-0964	306	2
5120-01-187-3625	319	38
5120-01-187-3626	319	36
4730-01-187-3637	117	27
	118	63
	119	39
5210-01-187-3647	319	40
2590-01-187-9536	59	90
5315-01-187-9614	323	11
5315-01-188-3200	322	5
5315-01-188-3201	322	4
1005-01-188-3215	323	7
1005-01-188-3217	312	3
5305-01-188-4748	260	5
5310-01-188-7626	321	4
5330-01-188-7645	239	19
3040-01-188-7768	324	7
1005-01-188-7858	323	5
1005-01-188-7860	321	3
1005-01-188-7879	312	9
5365-01-188-8041	314	4
5365-01-188-8042	222	2
5975-01-188-8873	99	53
	107	53
1005-01-189-4664	324	3
3110-01-189-7565	324	5
5306-01-190-3165	312	8
1005-01-190-3313	322	2
1005-01-190-3314	323	14
1005-01-190-3323	222	1
5365-01-190-3394	314	11
5330-01-190-5814	240	16
5305-01-190-6655	321	2
	322	3
	323	1
5315-01-190-6840	312	1
1005-01-190-6857	322	1
5305-01-190-8528	243	20
3040-01-190-8541	323	6
1005-01-190-8547	321	1
1005-01-191-8726	314	14
[redacted]	[redacted]	[redacted]
	[redacted]	[redacted]
1005-01-191-8884	314	3

STOCK NUMBER	FIG.	ITEM
1005-01-191-8888	228	10
5365-01-192-1517	237	40
1005-01-192-1689	228	17
5320-01-192-2248	210	13
5365-01-192-4029	255	2
1005-01-192-4068	227	48
4320-01-192-4070	227	44
5340-01-192-4172	228	14
3040-01-192-6781	315	2
5360-01-192-6988	314	8
1005-01-192-7023	234	4
1005-01-192-7195	199	3
5306-01-192-9193	323	13
5340-01-192-9198	228	16
4730-01-192-9578	61	6
6685-01-193-1733	305	32
5306-01-194-4974	30	6
4730-01-194-5590	162	65
	210	5
5315-01-194-5607	237	49
5930-01-194-5664	324	14
5330-01-194-7027	147	12
3040-01-194-7959	237	44
5310-01-194-9064	60	19
5995-01-195-0153	272	9
	278	12
4730-01-195-7331	154	64
1005-01-196-2190	216	1
1005-01-196-2191	217	1
5305-01-196-2645	62	280
5210-01-196-3570	324	8
2540-01-196-4678	146	7
5310-01-196-4867	154	47
2590-01-196-8020	132	26
	133	9
2590-01-196-8021	132	25
	133	8
2510-01-196-8136	73	71
	86	26
5305-01-196-8194	324	1
5305-01-197-1516	143	24
5340-01-197-4503	27	12
	28	12
5305-01-197-4644	324	9
3130-01-197-8282	123	38
5315-01-198-0568	326	21
4730-01-198-0571	162	71
	210	2
5330-01-198-0574	86	12
3040-01-198-0673	126	52
5305-01-198-1702	312	2
3110-01-198-3895	238	74
	255	93
5342-01-199-2349	271	38
	275	41
9905-01-200-9249	180	3
5340-01-201-0757	237	71
4140-01-201-4359	227	34
5120-01-202-1709	305	77
4730-01-202-3351	62	117
5305-01-202-7534	246	13
5360-01-203-0718	257	33
5140-01-203-2781	313	2
5895-01-203-2782	305	81
[redacted]	[redacted]	[redacted]
	[redacted]	[redacted]

STOCK NUMBER	FIG.	ITEM
5306-01-204-4465	55	34
9905-01-204-5828	213	8
3020-01-204-5879	237	65
2540-01-204-6019	197	9
	198	10
5310-01-204-6648	131	15
5306-01-205-2799	135	18
	136	13
6210-01-206-0138	271	24
	275	28
5310-01-206-0792	238	1
	255	24
5120-01-206-0794	319	7
5905-01-206-0810	235	84
5330-01-206-3415	181	32
	182	54
5340-01-206-3880	132	3
2510-01-206-3884	15	2
5670-01-206-3885	15	10
2510-01-206-3886	29	89
5340-01-206-3887	29	87
9515-01-206-3888	29	88
2510-01-206-3889	29	86
5340-01-206-3896	14	6
5995-01-206-4064	94	70
	102	75
6150-01-206-4065	97	18
	105	12
3120-01-206-4081	39	45
6240-01-206-4148	311	18
5365-01-206-4173	40	34
5995-01-206-4255	100	53
	108	72
5305-01-206-8110	314	10
4730-01-207-1771	57	111
1005-01-207-1921	324	11
5120-01-207-1951	305	98
5340-01-207-1952	162	31
6135-01-207-3490	165	8
5340-01-207-9014	132	5
	133	41
5310-01-207-9021	117	4
	118	11
5330-01-207-9157	117	72
	118	43
5330-01-207-9158	117	2
5330-01-207-9159	117	40
5330-01-207-9160	117	18
5330-01-207-9161	118	38
5330-01-207-9162	117	61
5330-01-207-9163	117	65
6150-01-207-9165	98	18
	106	20
3020-01-207-9167	73	91
7690-01-207-9232	132	47
	133	65
6680-01-207-9285	96	27
	104	27
5365-01-208-0632	181	44
	182	25
5315-01-208-2266	305	80
5325-01-209-2932	118	23
	119	53
	185	60
[redacted]	[redacted]	[redacted]
4730-01-211-1814	62	214

STOCK NUMBER	FIG.	ITEM
5310-01-211-3047	62	304
2815-01-211-6703	62	60
5305-01-211-7285	62	284
5305-01-211-7414	62	10
4910-01-212-5040	305	24
4030-01-213-1256	32	8
	33	11
	165	6
5305-01-213-4005	205	8
	237	12
3040-01-213-7575	129	31
5995-01-213-7603	100	43
	108	41
5935-01-214-0797	96	42
	104	42
[redacted]	[redacted]	[redacted]
[redacted]	[redacted]	[redacted]
[redacted]	[redacted]	[redacted]
5930-01-214-2647	98	17
	106	16
4820-01-214-6905	62	11
4730-01-214-7081	62	49
1005-01-215-8175	219	3
4720-01-215-9699	BULK	8
2510-01-215-9954	29	59
2510-01-215-9955	29	69
9515-01-215-9956	29	60
3040-01-216-2704	251	8
3040-01-216-2716	249	14
3040-01-216-2717	251	4
5330-01-216-2732	38	24
3040-01-216-2735	249	1
5310-01-216-3677	53	5
3110-01-216-7815	172	70
4730-01-217-2656	118	36
4710-01-217-4625	162	73
9905-01-217-7306	229	13
9905-01-217-7307	27	22
	28	26
5120-01-217-8264	319	73
4730-01-217-9926	162	51
1005-01-218-6171	178	4
1005-01-218-6172	197	7
5340-01-218-6174	237	55
5140-01-218-6176	193	8
	194	8
5330-01-218-6180	193	26
	194	30
4710-01-218-7527	127	43
5995-01-219-7035	100	75
	108	49
2510-01-220-0693	245	7
5120-01-221-3986	319	71
3040-01-222-6591	52	8
7690-01-222-7995	170	18
2530-01-222-8006	52	25
2530-01-222-8007	52	25
4720-01-222-8259	60	75
4730-01-222-9647	73	72
5340-01-223-2652	39	34
5210-01-223-4690	319	20
2540-01-224-4364	139	27
5340-01-224-8272	123	37
5365-01-224-9173	326	20
5330-01-225-1043	BULK	35
5995-01-225-1662	100	76

STOCK NUMBER	FIG.	ITEM
	108	50
5340-01-226-2360	326	9
5340-01-226-3457	118	28
	119	71
5340-01-226-5223	326	12
5340-01-226-5456	123	36
5340-01-227-3419	162	35
5310-01-227-5541	38	11
2540-01-227-7066	185	83
2540-01-227-7067	184	77
	185	87
2540-01-227-7068	184	78
	185	88
2540-01-227-7069	184	79
	185	89
	185	90
	[redacted]	[redacted]
5340-01-227-7071	182	11
5360-01-227-7076	181	48
5365-01-227-7092	181	23
4140-01-228-8356	208	10
	209	10
5340-01-228-8555	40	30
3020-01-228-9264	73	30
3940-01-229-0506	306	3
3940-01-229-0507	306	4
4010-01-229-8307	306	5
5930-01-230-0265	98	22
	106	21
2530-01-231-2923	165	4
2590-01-231-5396	39	44
5330-01-231-5926	117	54
	118	17
7690-01-231-6936	39	43
	40	82
5340-01-234-1903	40	37
2590-01-234-2808	39	37
	40	12
4820-01-235-0223	247	4
3110-01-235-0225	227	28
5306-01-236-1588	271	78
	275	81
5365-01-236-2114	31	47
5975-01-236-2902	94	15
	102	15
4730-01-236-3181	162	64
4010-01-237-1753	300	58
6230-01-237-2953	94	32
	102	32
	271	16
	275	17
5340-01-237-7422	94	31
	102	31
	270	10
	271	13
	274	14
	275	14
5330-01-238-9715	KITS	9
5330-01-238-9716	KITS	10
4720-01-240-3058	BULK	15
5365-01-240-5248	40	42
5305-01-240-5955	241	10
5305-01-240-7156	62	6
7690-01-240-7300	103	68
	110	37
	158	56

STOCK NUMBER	FIG.	ITEM
7690-01-241-2209	127	49
5340-01-242-0945	132	67
	133	84
7690-01-242-4558	103	69
	110	38
	158	59
4730-01-244-2460	15	22
5330-01-244-5773	KITS	11
5340-01-244-9856	118	60
2910-01-245-2436	117	17
2910-01-245-2437	117	41
2910-01-245-2438	117	60
5930-01-245-2468	39	66
	40	63
2590-01-245-7556	22	2
5340-01-246-6172	62	260
3120-01-246-7497	129	33
2540-01-247-5505	137	7
5310-01-251-8576	184	48
	184	48
	185	54
	185	54
1005-01-252-4280	305	73
5315-01-252-5369	139	34
	140	32
4820-01-252-7379	117	12
3120-01-252-8031	126	23
5306-01-252-9103	227	14
2540-01-253-0469	155	2
5310-01-253-1618	242	2
5310-01-254-1377	181	53
4010-01-254-1421	306	6
5120-01-254-1497	305	65
5340-01-255-0963	38	121
5315-01-255-2267	181	59
5315-01-255-2268	182	9
5340-01-256-1645	134	10
6150-01-256-1726	134	6
2540-01-256-2298	207	1
5915-01-256-4902	134	7
5340-01-256-9656	182	4
5340-01-258-4684	27	23
	28	34
5935-01-258-7336	96	23
	104	23
5120-01-262-7309	319	58
2530-01-264-0097	129	53
1005-01-266-3565	184	32
	185	31
5340-01-266-3580	184	42
	185	50
5340-01-266-3581	184	80
	185	93
5340-01-266-3583	184	71
5340-01-266-3584	184	44
	185	51
9515-01-266-3590	184	30
	185	30
9515-01-266-3591	184	46
	185	52
9535-01-266-3593	184	93
	185	110
9515-01-266-3594	184	70
9515-01-266-3598	184	83
	185	98
9515-01-266-3599	184	86

STOCK NUMBER	FIG.	ITEM
	185	102
9515-01-266-3600	184	87
	185	103
9515-01-266-3601	184	39
	185	47
5340-01-266-6034	312	13
5305-01-266-8351	257	35
5340-01-266-9573	218	9
1005-01-266-9576	227	51
5365-01-266-9585	218	16
9515-01-266-9593	184	88
	185	104
5340-01-266-9600	218	2
1005-01-266-9615	218	5
3040-01-267-1390	129	43
9905-01-267-2159	193	42
	194	45
5340-01-267-2165	193	41
	194	44
3040-01-267-2571	129	49
4730-01-267-2624	59	74
2530-01-267-4303	129	61
7690-01-267-5735	18	2
5315-01-267-6150	226	7
9905-01-267-6152	218	27
3040-01-267-6153	226	26
5315-01-267-6154	226	30
3120-01-267-6155	224	16
5340-01-267-6156	224	19
5365-01-267-6157	218	29
3040-01-267-6158	226	8
5340-01-267-6159	218	26
5340-01-267-6160	218	23

STOCK NUMBER	FIG.	ITEM
5340-01-267-6165	218	21
1055-01-267-6166	206	10
5340-01-267-6167	224	8
5315-01-267-7570	190	19
4320-01-267-8078	224	4
5365-01-267-8095	225	6
3120-01-267-8096	225	1
5305-01-267-8100	225	12
1005-01-267-8103	224	12
9515-01-267-8106	184	25
	185	25
9515-01-267-8107	184	28
	185	28
9515-01-267-8108	184	26
	185	26
4933-01-267-8112	224	18
1005-01-267-8123	226	3
9515-01-268-0388	184	67
	185	77
5340-01-268-0389	185	57
5945-01-268-3371	226	16
5360-01-268-3372	226	18
5340-01-268-3374	188	2
9515-01-268-3375	184	24
	185	24
9515-01-268-3376	184	65
2590-01-268-7915	KITS	4
5306-01-268-9090	296	18
5305-01-269-5132	110	31
4730-01-269-9540	133	104
5315-01-270-0173	129	12
5340-01-270-7481	27	6
	28	6

STOCK NUMBER	FIG.	ITEM
2540-01-270-7487	20	13
2540-01-270-7489	20	30
2590-01-270-7491	127	51
6230-01-270-7510	170	12
6150-01-270-7517	100	60
	108	79
3040-01-270-7522	127	56
5340-01-270-7523	25	132
5340-01-270-7538	20	31
5340-01-270-7539	20	25
5340-01-270-7551	20	18
5340-01-270-7552	20	17
5340-01-270-7553	20	15
5340-01-270-7554	20	27
5340-01-270-7555	20	14
5340-01-270-7567	25	158
7690-01-270-7568	162	16
5365-01-270-7569	20	34
5365-01-270-7570	20	33
5365-01-270-7571	20	35
5365-01-270-7572	20	36
5340-01-270-7576	12	16
5342-01-270-7579	161	23
5340-01-270-7593	25	151
5342-01-270-7598	25	119
3040-01-270-7601	127	57
3040-01-270-7602	127	82
4820-01-270-7603	25	106
5961-01-270-7604	59	38
5961-01-270-7605	95	41
	103	54
	109	60
	149	13

STOCK NUMBER	FIG.	ITEM
9535-01-271-0251	2	37
5340-01-271-0258	41	23
2540-01-271-0260	20	11
2590-01-271-0261	127	14
2540-01-271-0265	20	13
5330-01-271-0274	90	41
5340-01-271-0276	170	3
2590-01-271-0278	161	13
5340-01-271-0279	25	161
5365-01-271-0289	127	72
5340-01-271-0293	127	17
5340-01-271-0294	170	21
2530-01-271-0298	25	58
5342-01-271-0299	98	44
	106	46
	162	41
4710-01-271-0301	127	10
5330-01-271-0302	25	135
3040-01-271-0304	25	142
3040-01-271-0305	25	146
3040-01-271-0306	25	164
5330-01-271-0307	90	36
5365-01-271-0313	20	21
5365-01-271-0314	20	22
5975-01-271-0322	127	87
3130-01-271-0325	25	141
2540-01-271-0338	30	20
2540-01-271-0343	30	22
	211	13
2540-01-271-0344	30	2
	211	6
5340-01-271-0353	25	160
5995-01-271-0368	100	61

STOCK NUMBER	FIG.	ITEM
	108	80
4910-01-271-1464	305	92
5315-01-271-3047	129	10
3040-01-271-3050	129	57
3040-01-271-8059	225	4
2590-01-271-9235	27	41
	28	47
3040-01-271-9545	129	65
3040-01-271-9547	129	62
5995-01-271-9588	100	62
	108	81
4730-01-272-2824	62	142
3040-01-272-3048	225	2
5340-01-272-7758	129	68
5310-01-273-4535	9	2
	237	67
	257	28
5340-01-273-5947	195	3
	196	3
5340-01-273-5949	226	23
1005-01-273-5977	226	19
9515-01-273-5981	184	89
	185	105
9515-01-273-5982	184	40
	185	48
5340-01-273-5984	226	12
1005-01-273-5986	218	8
5330-01-273-5988	188	17
5340-01-273-9358	193	4
	194	4
5305-01-273-9474	184	47
	184	47
	185	53

STOCK NUMBER	FIG.	ITEM
	185	53
5975-01-274-0220	173	36
5310-01-274-3255	38	22
	181	38
	182	26
	190	4
	[redacted]	[redacted]
5360-01-274-3561	38	102
5340-01-274-8912	25	4
2520-01-274-8914	23	7
2520-01-274-8915	23	4
5360-01-274-8946	27	40
	28	46
5340-01-274-8950	27	26
	28	23
5340-01-274-8951	27	27
	28	22
5340-01-274-8956	27	30
	28	36
5340-01-274-8957	20	26
4710-01-274-8966	25	63
4710-01-274-8969	25	123
4710-01-274-8970	25	155
4710-01-274-8972	25	64
5365-01-274-8974	25	20
5340-01-274-8994	27	62
	28	68
5340-01-274-8995	27	37
	28	43
5340-01-274-8996	171	3
2530-01-274-8998	53	17
5995-01-274-8999	100	8
	108	8

STOCK NUMBER	FIG.	ITEM
4710-01-275-0035	141	49
5340-01-275-7167	226	27
5340-01-276-5089	226	24
4720-01-276-8655	117	9
5305-01-277-0452	15	13
5305-01-277-6415	59	2
	60	17
	61	38
	126	51
5315-01-277-8927	127	85
5340-01-277-9970	118	68
	119	41
5120-01-278-6889	305	102
3020-01-279-1675	238	32
5305-01-279-2339	127	61
[redacted]	[redacted]	[redacted]
	[redacted]	[redacted]
	[redacted]	[redacted]
	[redacted]	[redacted]
5360-01-279-6185	226	13
9340-01-280-3412	134	24
6680-01-280-4354	55	1
5310-01-280-5796	41	9
	127	12
	154	2
	166	5
5330-01-280-5838	134	27
5330-01-280-5839	134	23
5315-01-280-6180	25	150
4730-01-280-8350	133	100
6680-01-280-9479	86	1
5330-01-281-1338	238	35
3040-01-281-1426	238	34

STOCK NUMBER	FIG.	ITEM
4730-01-281-5915	57	40
5330-01-282-2207	134	25
5330-01-282-3416	118	58
6220-01-284-2709	111	8
5305-01-286-3615	26	18
5330-01-286-4028	26	1
4820-01-287-9742	62	255
2815-01-288-0494	81	4
5365-01-288-2292	129	15
5330-01-288-2722	86	14
2540-01-288-2787	29	24
3040-01-288-2798	25	162
5340-01-288-2799	29	43
5340-01-288-2803	94	14
	102	14
5340-01-288-2804	94	24
	102	24
6150-01-288-2824	59	1
2540-01-288-5229	129	11
5340-01-288-5230	94	8
	102	8
5340-01-288-5231	94	17
	102	17
6220-01-288-5234	94	23
	102	23
6220-01-288-5235	94	4
	102	4
3040-01-288-5238	129	22
2940-01-288-8431	81	23
2590-01-289-6364	42	26
	43	35
2590-01-289-6365	42	48
	43	49

STOCK NUMBER	FIG.	ITEM
6680-01-289-6511	47	2
	54	5
5330-01-289-6584	65	12
5325-01-289-6629	47	1
	54	6
5935-01-289-7390	100	19
	108	20
2815-01-290-1290	58	2
	62	1
4730-01-291-1589	57	15
4730-01-291-4068	57	16
4730-01-291-5816	57	110
2990-01-291-5880	60	84
2990-01-291-5881	82	18
5330-01-291-6537	63	16
5995-01-291-6607	100	54
	108	73
2990-01-291-8221	82	15
4730-01-291-8454	81	31
4730-01-291-8470	60	79
2540-01-292-1725	129	8
2520-01-292-2992	KITS	21
4710-01-292-6329	81	1
4720-01-292-6389	61	7
4720-01-292-6391	60	34
6220-01-293-2627	111	7
4320-01-293-4431	KITS	3
2990-01-293-4462	82	8
3040-01-293-6061	129	52
5340-01-293-6149	57	71
5330-01-293-6661	129	14
4820-01-293-6779	62	218
5340-01-293-8675	293	21
4730-01-294-3284	60	77
4720-01-294-7227	62	295
5342-01-295-7639	25	5
2530-01-296-4897	KITS	28
2530-01-296-4899	KITS	26
2530-01-296-4901	KITS	27
2530-01-296-4907	KITS	25
2510-01-297-3051	42	40
	43	34
2510-01-297-3052	42	39
	43	33
2510-01-297-3053	42	32
	43	45
2510-01-297-3054	42	31
	43	44
5340-01-298-4893	154	69
4720-01-298-5282	154	68
9515-01-298-6630	184	103
	185	120
9515-01-298-6631	184	94
	185	111
5340-01-298-8288	155	3
2540-01-298-8289	155	8
5340-01-298-8405	155	6
2990-01-298-8430	82	5
4710-01-298-9513	155	1
4730-01-298-9536	117	10
4720-01-299-7050	272	45
	278	43
9515-01-299-8778	184	50
	185	56
4720-01-299-8788	154	20
	155	15

STOCK NUMBER	FIG.	ITEM
5305-01-299-9534	268	23
	271	26
	275	30
	276	24
5310-01-300-0896	235	91
	237	26
9515-01-300-4155	184	84
	185	100
9905-01-300-4159	184	58
	185	65
5340-01-300-6409	225	5
3120-01-300-6419	25	144
9515-01-300-6444	184	60
	185	67
1005-01-300-6475	184	55
	185	62
5975-01-300-6501	268	16
	276	17
5305-01-300-7444	127	113
9905-01-301-4627	26	19
5340-01-301-7885	159	41
	162	55
5342-01-302-3311	25	44
5340-01-302-4196	184	98
	185	115
5930-01-302-5670	62	211
2510-01-302-6287	25	127
5330-01-302-9946	81	18
5330-01-302-9947	81	21
5340-01-302-9960	81	7
4710-01-303-0039	62	71
5342-01-303-1034	25	128
4730-01-303-1101	62	216
4730-01-303-1130	62	114
4730-01-303-1163	62	208
4730-01-303-1165	62	309
4730-01-303-1166	62	323
2815-01-303-1178	62	129
2815-01-303-1191	62	143
4730-01-303-1201	62	90
2815-01-303-1210	62	68
2815-01-303-1211	62	72
4710-01-303-1214	62	313
4710-01-303-1217	62	217
5305-01-303-1548	62	175
5365-01-303-1869	209	19
3040-01-303-2508	161	25
2520-01-303-2531	62	83
5306-01-303-3836	62	149
5305-01-303-3853	62	79
5305-01-303-3854	62	73
5305-01-303-3856	62	207
5307-01-303-3868	62	194
5310-01-303-4701	94	86
	96	40
	102	48
	104	40
9535-01-303-5177	31	37
9515-01-303-5223	184	85
	185	101
5305-01-303-5455	62	328
5305-01-303-5458	62	61
5305-01-303-5459	62	125
5305-01-303-5460	62	177
5310-01-303-5647	59	86
4710-01-303-5920	62	310

STOCK NUMBER	FIG.	ITEM
4710-01-303-5921	62	320
4710-01-303-5922	62	308
4710-01-303-5923	62	314
4710-01-303-5924	62	204
4710-01-303-5925	62	225
5365-01-303-6340	62	325
4720-01-303-6380	62	141
4720-01-303-6390	62	174
4720-01-303-6391	62	122
4720-01-303-6392	62	299
2930-01-303-6420	62	286
2930-01-303-6421	62	14
2930-01-303-6422	62	12
4710-01-303-6457	62	77
4710-01-303-6458	62	172
4710-01-303-6460	62	154
4710-01-303-6461	62	188
5310-01-303-8642	62	144
5310-01-303-8659	62	312
5342-01-303-9738	62	163
5342-01-303-9739	62	173
5342-01-303-9740	62	165
5360-01-303-9750	62	78
5330-01-303-9752	62	178
5331-01-303-9753	62	162
5331-01-303-9754	62	65
5330-01-303-9757	62	195
5330-01-303-9758	62	3
5330-01-303-9759	62	15
5342-01-303-9785	62	69
5340-01-303-9789	62	167
5340-01-303-9790	62	213
5340-01-303-9798	62	212
5331-01-304-1151	62	171
5340-01-304-1817	123	12
4720-01-304-1938	81	37
4730-01-304-2561	62	326
2910-01-304-2704	62	311
5365-01-304-3583	25	16
2510-01-304-4106	25	12
9515-01-304-4287	30	44
4710-01-304-5524	62	199
4710-01-304-5525	62	319
4710-01-304-5526	62	224
4710-01-304-5527	62	205
4710-01-304-5528	62	315
4710-01-304-5529	62	70
4710-01-304-5623	62	166
4820-01-304-6152	62	209
5310-01-304-8733	27	7
	28	7
	97	5
	105	8
	120	2
	121	2
5342-01-304-9407	62	82
5342-01-304-9409	62	140
2815-01-305-3155	62	179
2815-01-305-3156	62	180
2930-01-305-3168	62	4
2815-01-305-3236	62	124
5340-01-305-4410	29	13
4710-01-305-5744	62	300
5365-01-305-5993	62	245
5340-01-305-7719	161	19
5340-01-305-7721	25	34

STOCK NUMBER	FIG.	ITEM
5365-01-306-2360	30	29
4820-01-306-3275	13	1
5340-01-306-5851	141	45
5330-01-307-5897	90	37
4730-01-307-7217	57	99
5340-01-307-7271	29	83
5945-01-307-9255	62	251
2530-01-308-1390	KITS	23
5315-01-308-1520	326	3
5640-01-309-0302	60	85
5640-01-309-0303	60	83
2540-01-309-0304	60	72
1660-01-309-0306	60	87
2540-01-309-0307	60	73
5305-01-309-2582	62	80
4730-01-309-3295	62	316
4730-01-309-3300	62	321
4730-01-309-3307	62	317
4730-01-309-3321	62	158
4720-01-309-6158	62	115
2815-01-309-6180	62	9
4730-01-309-6370	81	47
3020-01-309-6578	86	30
4820-01-309-6580	58	11
5310-01-309-9336	62	113
5331-01-309-9361	62	112
5330-01-309-9437	KITS	18
5330-01-310-0996	KITS	19
4140-01-310-1985	83	6
6110-01-310-2075	96	19
	104	19
2530-01-310-2237	42	7
	43	7
	44	7
5340-01-310-2530	255	81
4710-01-310-4571	154	27
4710-01-310-4572	154	32
2990-01-310-4776	154	3
2540-01-310-4794	27	46
	28	52
5340-01-310-5276	27	35
	28	41
5340-01-310-5337	27	33
	28	39
5340-01-310-5869	27	32
	28	38
4710-01-310-6835	154	26
5975-01-310-9625	127	37
5310-01-311-0003	29	37
	211	8
5120-01-311-2656	305	40
2540-01-311-6843	78	14
5670-01-311-6858	27	21
	28	24
2510-01-311-6859	34	14
2510-01-311-6860	34	5
[redacted]	[redacted]	[redacted]
9905-01-312-0093	62	54
5340-01-312-1015	190	46
5340-01-312-1019	193	5
	194	5
5310-01-312-1059	172	39
2540-01-312-4730	42	22
	43	28
5310-01-312-4959	94	36
	102	36

STOCK NUMBER	FIG.	ITEM
	146	26
	271	80
	275	80
3040-01-312-5315	190	44
5365-01-312-5436	188	10
4710-01-312-5693	62	116
4710-01-312-5694	62	111
5180-01-312-7906	KITS	24
9905-01-312-9142	78	10
5342-01-312-9563	60	86
2540-01-312-9661	25	1
5340-01-313-0029	57	49
5340-01-313-0411	129	48
5340-01-313-0701	190	29
5340-01-313-0702	190	28
3040-01-313-0707	190	14
6150-01-313-1225	96	16
	104	16
2930-01-313-2863	57	46
4710-01-313-7226	62	222
3010-01-313-7738	KITS	16
5305-01-313-8603	132	101
	133	135
6650-01-313-8946	97	33
	105	38
	243	4
6650-01-313-8947	249	5
6650-01-313-8948	246	8
6650-01-313-8949	249	11
4710-01-313-9339	57	13
5365-01-314-0042	84	6
5365-01-314-0043	84	18
5365-01-314-0044	84	17
5310-01-314-0063	84	7
5340-01-314-0779	84	11
6650-01-314-1789	250	1
6680-01-314-2933	96	25
	104	25
4210-01-314-2939	127	53
6650-01-314-3577	249	8
3040-01-314-4409	84	3
2540-01-314-5209	20	2
6150-01-314-5230	316	6
4720-01-314-5705	60	14
5360-01-314-5926	129	47
3040-01-314-6952	84	12
4140-01-315-3959	83	5
5120-01-315-5708	305	35
7690-01-315-8534	170	2
3110-01-315-8663	84	8
5305-01-315-8806	62	327
5305-01-315-8807	62	128
	65	22
5310-01-315-9544	41	20
3010-01-315-9665	83	1
5945-01-316-1000	62	324
5365-01-316-1792	38	92
2520-01-316-4857	62	39
2930-01-316-5775	84	19
6150-01-316-9454	62	241
5310-01-317-2660	57	44
3040-01-317-3913	84	10
5365-01-317-4039	37	3
5340-01-317-5378	38	117
5365-01-317-7070	184	99
	185	116

STOCK NUMBER	FIG.	ITEM
5330-01-317-7418	42	19
	43	25
	44	25
4730-01-317-8298	60	55
4730-01-317-8893	117	23
6650-01-317-9138	38	75
	193	12
	194	15
6650-01-317-9139	22	3
1005-01-317-9147	228	5
3040-01-318-2958	190	35
5325-01-318-6908	42	18
	43	24
	44	24
4320-01-318-7458	141	30
2990-01-318-7460	82	9
5360-01-318-7702	190	47
5315-01-319-2199	38	130
6150-01-319-4794	59	91
4320-01-319-8223	141	30
5340-01-319-8993	190	6
1240-01-319-8994	193	25
	194	29
1240-01-319-8995	193	22
	194	26
5340-01-320-4112	38	116
5340-01-320-4309	38	114
2815-01-321-7030	62	93
5365-01-321-9877	184	100
	185	117
2815-01-322-2340	62	94
5310-01-322-2397	62	197
5330-01-322-2844	82	12
5640-01-322-5851	60	81
5340-01-322-5852	81	34
5340-01-322-5853	81	10
4720-01-322-5854	81	27
5340-01-322-5855	18	10
2915-01-322-5856	60	80
5640-01-322-5858	60	74
5640-01-322-5859	60	82
5640-01-322-5860	60	71
5640-01-322-5861	60	88
4710-01-323-1003	62	137
4730-01-323-2041	62	64
4710-01-323-2054	62	293
5330-01-323-2756	62	127
5330-01-323-2927	82	11
2815-01-323-3278	62	106
2815-01-323-3298	62	109
5120-01-323-5183	319	24
9535-01-323-5184	184	102
	185	119
5340-01-323-8437	62	294
5355-01-323-8768	225	8
5340-01-324-0206	127	94
5930-01-324-2220	271	28
	275	32
7690-01-324-4649	158	51
5331-01-324-4816	26	30
5305-01-324-4853	26	2
4140-01-324-6331	84	13
5315-01-324-6660	26	16
5342-01-324-7609	82	10
5975-01-325-0069	62	250
2940-01-325-5004	146	62

STOCK NUMBER	FIG.	ITEM
5306-01-325-5769	62	258
5305-01-325-5923	62	28
5305-01-325-5924	62	150
6680-01-325-5944	62	139
5305-01-325-5969	62	239
5340-01-325-6315	57	45
5305-01-325-8966	62	242
5340-01-326-2269	127	95
4710-01-326-8041	141	39
2590-01-326-9184	39	50
	40	95
7690-01-327-1903	25	147
	170	11
3040-01-327-6066	25	149
7690-01-328-6371	260	9
5340-01-329-1549	132	98
	133	132
5999-01-329-1659	94	52
	102	51
1055-01-329-2269	326	1
1055-01-329-2270	326	2
5210-01-329-4860	305	110
5340-01-329-8582	170	19
	171	14
5340-01-329-8590	129	46
2920-01-330-2061	62	229
6150-01-330-2110	94	10
	102	10
1005-01-330-6583	228	1
5306-01-330-9744	181	12
	193	18
	194	21
4720-01-332-1328	62	318
5365-01-332-4167	84	16
4810-01-332-5452	78	9
4810-01-332-5813	78	19
4820-01-332-5821	78	21
5935-01-332-6726	241	24
5305-01-332-8210	62	66
2910-01-333-3648	62	87
5360-01-333-4133	25	121
6105-01-333-5845	142	14
5340-01-333-6628	222	5
1005-01-333-9252	222	4
1005-01-334-6999	221	12
2510-01-334-7016	184	107
	185	123
5310-01-335-7092	98	2
	106	2
	146	32
	178	3
5330-01-336-3140	52	2
5340-01-336-5952	57	76
5340-01-336-6144	59	5
4210-01-336-9159	127	30
3040-01-336-9228	127	32
4730-01-337-0028	60	43
	117	22
3020-01-337-4173	25	22
2990-01-337-4279	82	13
[redacted]	[redacted]	[redacted]
5640-01-338-1916	155	9
9320-01-338-2385	BULK	36
9330-01-338-2564	BULK	48
5330-01-338-4829	62	266
2540-01-339-0555	20	1

STOCK NUMBER	FIG.	ITEM
5365-01-339-4037	27	59
	28	65
9905-01-339-4821	84	2
5310-01-340-7412	188	14
2540-01-340-7940	184	94
	185	111
5340-01-341-2960	62	138
5340-01-341-3248	42	35
	43	38
	44	38
5342-01-341-3252	153	3
5340-01-341-4791	242	3
5340-01-341-7185	184	108
	185	124
5999-01-342-2225	[redacted]	[redacted]
	300	22
5340-01-342-3202	184	104
	185	121
5360-01-342-5224	225	7
4730-01-343-0451	81	14
4730-01-343-1771	81	13
4730-01-343-8218	62	246
4730-01-343-8223	62	237
4730-01-343-8425	62	247
4730-01-343-8429	62	202
5120-01-343-9634	305	59
5340-01-344-0311	27	55
	28	60
5930-01-344-1018	27	58
	28	64
5331-01-344-4226	62	244
4820-01-344-5772	62	257
[redacted]	[redacted]	[redacted]

STOCK NUMBER	FIG.	ITEM
5305-01-344-6326	62	259
5342-01-344-6353	62	261
4820-01-344-9434	62	256
5310-01-345-3772	39	86
	40	2
2540-01-345-6991	300	3
5355-01-346-1275	62	32
4720-01-346-4148	62	236
4720-01-346-4149	62	238
4730-01-346-9291	25	56
5340-01-347-1869	184	61
	185	69
9515-01-347-6170	30	24
	211	17
4720-01-347-7355	62	248
5120-01-348-0959	305	58
5340-01-348-6604	305	99
2540-01-348-9764	30	23
	211	14
4720-01-349-2461	25	62
5130-01-349-2668	319	13
2540-01-349-6133	146	4
4820-01-349-7392	26	6
3040-01-349-7399	26	29
5331-01-350-2973	26	15
5305-01-351-0882	271	60
	275	62
4720-01-351-4082	57	72
2540-01-351-7049	30	19
5365-01-351-7423	30	3
4730-01-351-9943	133	106
5999-01-352-1054	144	12
5310-01-352-2752	12	14

STOCK NUMBER	FIG.	ITEM
	127	71
2540-01-352-3801	153	1
5305-01-352-4397	169	7
4520-01-352-5652	146	57
5342-01-353-1955	82	20
5325-01-353-9600	12	21
	157	29
	169	16
3120-01-354-8264	130	40
1005-01-355-0566	177	12
5340-01-355-0872	177	10
6150-01-355-6395	316	7
5935-01-355-7539	300	69
7690-01-356-5882	145	40
7690-01-356-5884	127	36
5325-01-356-6221	95	13
	103	13
7690-01-356-7977	127	33
5998-01-356-8544	260	4
5340-01-357-1061	17	10
5340-01-357-3994	17	7
5340-01-357-3995	17	9
3130-01-357-4483	129	59
5905-01-357-7000	256	8
2990-01-357-9700	82	19
5365-01-358-1788	94	28
	102	27
5365-01-358-2303	132	31
	133	21
2930-01-358-2537	18	11
2510-01-358-2891	17	4
2510-01-358-2892	17	5
5342-01-358-5476	55	18
2540-01-358-6332	17	13
2540-01-358-6333	31	38
2540-01-358-6335	17	12
5310-01-358-7622	179	50
5315-01-359-1451	25	154
	127	75
	129	26
	132	16
	139	31
	140	19
	181	64
	182	22
	184	63
	185	71
	199	13
5310-01-359-1495	52	20
3040-01-359-5031	58	45
4730-01-360-0230	154	76
3110-01-360-3133	52	17
5120-01-361-9462	305	7
5120-01-361-9552	305	3
3030-01-362-0413	62	226
5365-01-364-3515	29	36
2530-01-364-9825	42	2
5310-01-364-9883	75	6
4240-01-365-0982	162	15
5310-01-365-8738	27	52
	28	57
3040-01-366-0779	127	69
3040-01-366-0780	127	73
5365-01-366-7762	184	72
	185	81
5305-01-367-1294	75	28

STOCK NUMBER	FIG.	ITEM
5120-01-367-3498	305	41
[redacted]	[redacted]	[redacted]
5210-01-367-7103	305	51
5340-01-368-5659	30	16
	211	27
5315-01-368-5708	170	27
3040-01-369-3576	58	41
3040-01-369-3578	123	7
5340-01-369-6921	271	65
	275	67
5935-01-370-0913	235	98
5330-01-370-1732	62	13
[redacted]	[redacted]	[redacted]
5340-01-371-1911	200	4
5365-01-371-9343	29	21
	211	28
5340-01-372-3014	182	52
5310-01-373-2547	2	8
	130	42
	172	60
	189	6
	300	12
5340-01-374-1036	145	32
5365-01-374-1165	145	4
3040-01-374-2095	145	7
3040-01-374-2514	145	22
2510-01-374-4108	18	3
5360-01-374-5167	145	28
5340-01-374-5506	65	15
2520-01-374-6895	145	11
5365-01-374-8413	181	9
3040-01-374-8663	145	29
5315-01-374-9503	181	27
1005-01-374-9525	227	52
2510-01-374-9700	181	33
2590-01-375-1642	181	10
5360-01-375-2883	181	8
5340-01-376-0654	181	5
5340-01-376-1858	181	40
2910-01-376-2266	118	32
3040-01-377-6615	145	17
4730-01-378-6066	62	119
3040-01-378-7279	145	24
3040-01-378-7674	129	54
3010-01-378-8770	145	8
5310-01-379-0007	172	80
5310-01-379-0804	2	23
	172	9
2940-01-379-6847	65	7
5331-01-379-8937	73	52
	86	8
2590-01-379-9051	182	53
5310-01-379-9572	130	39
	[redacted]	[redacted]
	[redacted]	[redacted]
	[redacted]	[redacted]
5310-01-379-9663	189	8
5310-01-379-9723	2	11
[redacted]	[redacted]	[redacted]
5305-01-380-0847	300	49
5995-01-380-3901	146	63
1005-01-380-5865	228	6
[redacted]	[redacted]	[redacted]
5360-01-380-9235	145	18
5342-01-381-1571	41	14
2990-01-381-1674	41	17

STOCK NUMBER	FIG.	ITEM
2990-01-381-1776	41	13
5340-01-381-3836	39	74
	40	72
5315-01-381-3860	38	8
2540-01-381-4482	39	83
2540-01-381-8680	41	12
5315-01-381-9836	39	77
	40	75
5340-01-381-9924	181	13
5310-01-381-9948	2	44
	130	7
	172	56
	189	2
	[redacted]	[redacted]
	[redacted]	[redacted]
	[redacted]	[redacted]
	[redacted]	[redacted]
	[redacted]	[redacted]
	[redacted]	[redacted]
3120-01-382-4105	145	27
5340-01-382-5989	39	23
	40	86
3120-01-382-8077	145	6
7690-01-382-8401	127	83
7690-01-382-8457	145	37
3040-01-382-8899	145	5
5340-01-383-0043	152	6
5330-01-383-2685	156	3
2540-01-383-5912	41	11
7690-01-383-7451	126	7
5315-01-383-8885	38	50
3120-01-383-9040	145	20
2590-01-384-0928	145	34

STOCK NUMBER	FIG.	ITEM
3040-01-384-1123	123	9
4730-01-384-1226	62	182
5310-01-384-4712	172	66
2910-01-384-5304	62	264
	65	25
	70	3
5340-01-384-5343	184	20
	185	20
5340-01-384-5387	184	36
5340-01-384-5392	227	53
5340-01-384-5397	184	17
	185	18
5340-01-385-8252	39	76
	40	74
2950-01-386-1566	62	181
3040-01-386-3462	38	12
2590-01-386-4122	38	45
2540-01-386-4163	184	21
	185	21
2540-01-386-4474	184	19
	185	19
7690-01-386-8921	127	81
5305-01-386-9052	138	15
3040-01-387-7217	145	19
5360-01-388-1523	39	14
5360-01-388-1565	39	13
5340-01-388-1800	38	70
5340-01-388-1805	38	68
5310-01-388-2296	130	30
5360-01-388-2297	38	16
5365-01-388-2319	39	84
5360-01-388-2350	38	17
5365-01-388-2361	39	89

STOCK NUMBER	FIG.	ITEM
5360-01-388-3692	38	18
5360-01-388-3701	38	19
5365-01-388-4157	38	59
5365-01-388-4487	38	55
3040-01-388-5810	38	42
5365-01-388-7026	38	123
5365-01-388-7878	38	71
5365-01-388-7889	146	61
3130-01-388-8768	38	3
3040-01-389-0300	38	20
4720-01-389-0316	25	72
5365-01-389-1365	38	67
5365-01-389-2421	28	21
9320-01-389-3248	BULK	31
5340-01-389-5973	38	37
5365-01-389-6360	38	52
3040-01-389-6436	38	14
5340-01-389-7971	36	3
5340-01-389-7998	38	134
9390-01-389-8910	65	3
2590-01-389-9875	KITS	29
5340-01-390-0035	39	30
	40	78
[redacted]	[redacted]	[redacted]
	[redacted]	[redacted]
5340-01-390-3861	38	88
5340-01-390-3862	38	98
5930-01-390-4024	38	63
5310-01-390-5131	271	59
5305-01-390-5211	132	45
5365-01-390-6507	38	36
5310-01-390-8400	62	26
5340-01-390-9046	39	4
5306-01-390-9108	62	168
4720-01-391-0878	62	169
2510-01-391-1045	38	34
5315-01-391-1348	145	30
5340-01-391-2218	39	72
5305-01-391-5024	145	33
5305-01-391-5027	145	39
5340-01-391-6122	39	87
6685-01-391-8587	62	288
5340-01-391-9104	39	80
	40	93
2540-01-392-2334	146	47
5340-01-392-3424	38	124
2590-01-392-5150	38	21
2540-01-393-2944	38	15
5305-01-393-7801	109	37
5340-01-393-9940	181	25
5120-01-394-4262	305	105
2590-01-395-8765	126	2
5306-01-396-1004	52	15
5999-01-396-1069	97	30
	105	35
2540-01-396-2826	154	35
5340-01-396-5849	132	100
	133	134
5340-01-397-7686	62	307
5310-01-398-0344	119	3
5342-01-398-2835	57	5
5340-01-400-0454	176	1
5340-01-400-0457	176	6
5340-01-400-0459	176	3
5340-01-400-1888	176	2
4210-01-406-2091	127	46

STOCK NUMBER	FIG.	ITEM
5340-01-406-4190	176	7
5340-01-406-4191	176	7
5340-01-406-4193	176	7
5340-01-406-4194	176	7
5340-01-406-4195	176	7
5340-01-406-4196	176	7
5340-01-406-4197	165	16
	176	7
5340-01-406-4198	176	7
2540-01-406-4716	20	24
5340-01-406-6339	161	17
5340-01-406-6967	176	7
5340-01-406-9219	2	29
5340-01-406-9715	141	36
2540-01-407-0636	176	5
2540-01-407-0638	176	4
4730-01-407-0728	141	32
4730-01-407-0729	141	48
2510-01-407-4854	27	16
	28	16
7690-01-407-8241	2	6
	9	16
	158	54
	159	51
	171	5
7690-01-407-8245	158	25
	290	4
	[redacted]	[redacted]
7690-01-407-8249	157	36
	158	52
5120-01-407-9662	305	66
4710-01-408-1514	146	53
4720-01-408-4707	60	60

STOCK NUMBER	FIG.	ITEM
5365-01-411-1593	160	11
5310-01-413-1037	42	21
	43	27
	44	27
5935-01-413-8115	257	18
2540-01-414-7899	197	6
2540-01-414-7900	146	23
5310-01-415-1314	202	13
5340-01-415-3418	60	62
5330-01-415-5241	65	28
	69	4
	70	4
5340-01-415-8671	25	138
5305-01-416-7168	145	16
5340-01-416-9980	25	116
4730-01-417-2282	25	110
6150-01-417-3401	96	50
	104	50
7690-01-417-3407	25	76
5305-01-417-4639	132	99
	133	133
4710-01-417-8485	25	92
5340-01-417-8537	290	2
	[redacted]	[redacted]
2910-01-417-9336	25	111
4710-01-417-9467	25	105
4720-01-418-0293	25	82
5340-01-418-3690	25	53
5340-01-418-6258	39	52
	40	85
5360-01-419-1266	39	68
	40	66
5365-01-419-1391	41	18

STOCK NUMBER	FIG.	ITEM
5330-01-419-3335	97	29
	105	34
2910-01-419-6286	25	115
2590-01-419-6289	25	75
4720-01-420-1155	25	91
4320-01-420-1177	25	54
5365-01-420-1816	25	109
6150-01-422-7583	100	42
	108	40
2510-01-423-0746	40	32
2815-01-423-0929	58	2
	62	1
8140-01-423-1436	193	30
	194	33
2930-01-423-5011	57	39
5310-01-423-7133	132	56
	133	73
5360-01-424-1347	40	26
5360-01-424-1348	40	43
5365-01-424-1349	40	31
2540-01-424-2147	38	100
5340-01-424-3549	38	99
3120-01-424-3601	40	27
5365-01-424-6511	38	108
5305-01-424-8744	57	9
3040-01-425-0393	40	16
5340-01-425-0680	184	90
	185	106
2590-01-425-1002	40	35
2590-01-425-1003	40	44
2815-01-425-1317	62	53
4730-01-425-1320	62	190
2930-01-425-1323	62	170
5315-01-425-2422	40	47
3040-01-425-2830	40	71
2540-01-425-5272	154	46
2540-01-425-5273	40	8
2540-01-425-5275	38	103
2540-01-425-5678	38	93
2590-01-425-8080	40	40
2930-01-425-9581	62	231
[redacted]	[redacted]	[redacted]
2540-01-426-2457	40	3
4710-01-426-3030	62	120
4933-01-426-3871	305	113
[redacted]	[redacted]	[redacted]
	[redacted]	[redacted]
4720-01-428-6402	25	101
5340-01-428-6611	113	12
5340-01-428-6615	113	2
6160-01-428-8791	113	17
5340-01-429-2996	113	8
4720-01-429-4979	62	189
5340-01-429-8501	113	1
5310-01-430-2833	15	34
6160-01-430-2854	113	6
6350-01-430-7176	127	88
5340-01-431-0620	200	22
5340-01-431-9797	38	44
2910-01-432-0373	62	264
2540-01-432-4651	200	14
2540-01-432-5139	200	21
2540-01-432-5148	201	11
4320-01-432-6208	25	60
5355-01-433-0395	200	18
5340-01-434-2291	244	7

STOCK NUMBER	FIG.	ITEM
5305-01-435-2944	226	25
[redacted]	[redacted]	[redacted]
2540-01-437-3317	200	2
5305-01-437-5503	94	77
	102	80
2920-01-438-4767	75	26
2540-01-438-4888	201	2
5360-01-439-2296	26	5
5360-01-439-2310	26	7
4931-01-439-3314	310	6
4820-01-439-3854	26	9
4820-01-439-3856	26	27
4820-01-439-3857	26	17
4820-01-439-3858	26	3
4820-01-439-3859	26	21
4810-01-439-3860	26	22
5340-01-439-3884	26	20
4810-01-439-4417	26	25
4710-01-439-4424	132	88
	133	129
4710-01-439-4831	132	82
	133	123
5342-01-439-5897	81	20
2590-01-439-9925	182	36
2510-01-439-9992	182	34
2510-01-440-0022	181	17
5315-01-440-0269	182	39
5360-01-440-4888	181	20
2530-01-440-7615	KITS	12
5340-01-441-7295	201	12
[redacted]	[redacted]	[redacted]
2530-01-442-9686	48	1
	48	1

STOCK NUMBER	FIG.	ITEM
5365-01-443-4447	182	40
5999-01-443-6234	60	68
[redacted]	[redacted]	[redacted]
5340-01-445-2102	171	8
6140-01-446-9498	95	28
	103	28
6140-01-446-9506	95	28
	103	28
2540-01-447-0003	113	14
4140-01-447-0025	83	6
6240-01-447-3779	111	9
	116	8
2520-01-447-8112	55	2
4730-01-448-2228	60	40
4730-01-448-2279	117	34
5340-01-448-5071	146	34
7690-01-448-8704	145	36
2590-01-449-1365	126	8
5940-01-449-3804	96	48
	104	48
5310-01-449-4234	145	9
[redacted]	[redacted]	[redacted]
5305-01-449-7391	193	10
	194	23
5355-01-449-9968	145	35
5325-01-450-0401	BULK	4
5340-01-450-8702	85	12
5342-01-451-5902	155	20
3020-01-451-8911	90	29
5365-01-451-9006	29	28
5365-01-451-9065	29	26
5365-01-451-9131	29	15
	211	24

STOCK NUMBER	FIG.	ITEM
5120-01-452-3355	305	114
5365-01-452-7425	29	31
3040-01-453-3886	90	40
4720-01-454-6176	81	38
5365-01-455-0075	25	28
3040-01-455-6635	129	64
5930-01-456-0530	268	26
	276	27
5330-01-456-2302	146	59
8140-01-456-2753	193	37
	194	40
1005-01-456-5348	204	1
5365-01-456-5477	90	23
2540-01-456-5706	139	20
2540-01-456-6737	146	59
5355-01-456-8031	187	33
1005-01-456-9523	190	21
1005-01-456-9772	185	5
2510-01-457-0134	190	16
5340-01-457-0185	184	12
	185	38
5365-01-457-0231	190	15
2540-01-457-0428	187	17
3040-01-457-0460	190	32
3040-01-457-0461	190	27
5340-01-457-1038	187	3
5340-01-457-1041	187	22
3040-01-457-1059	243	14
2540-01-457-1292	187	15
2510-01-457-1316	178	14
5365-01-457-1548	209	14
5365-01-457-2156	209	18
5365-01-457-2173	185	36
5365-01-457-2183	185	44
5365-01-457-2198	185	35
5365-01-457-2199	185	43
5340-01-457-2936	187	14
2540-01-457-3251	191	4
2540-01-457-3265	191	3
2540-01-457-3267	191	14
5305-01-457-5175	177	4
	193	9
5310-01-457-5514	187	29
5310-01-457-5523	187	29
5310-01-457-5533	187	29
5340-01-457-7009	184	69
	185	82
5340-01-457-7904	185	74
5340-01-457-9060	185	73
4820-01-457-9840	208	3
	209	3
1240-01-458-0220	190	26
7690-01-458-0550	190	23
7690-01-458-0610	190	22
5305-01-458-1615	224	11
5985-01-458-1629	29	23
	211	23
5975-01-458-1946	29	1
	211	19
[redacted]	[redacted]	[redacted]
5305-01-458-3588	187	16
[redacted]	[redacted]	[redacted]
	[redacted]	[redacted]
[redacted]	[redacted]	[redacted]
	[redacted]	[redacted]
5895-01-458-4331	275	6

STOCK NUMBER	FIG.	ITEM
3110-01-458-4358	227	40
5365-01-458-4365	240	12
6220-01-458-4368	270	23
	274	28
5975-01-458-8008	29	42
	211	16
5340-01-458-8994	184	9
	185	14
5340-01-459-0044	184	73
	185	80
9515-01-459-0164	185	75
9515-01-459-0242	184	18
	185	39
9515-01-459-0251	185	8
9515-01-459-0253	185	41
9535-01-459-0955	178	15
9535-01-459-0965	178	1
3990-01-459-5465	171	10
5340-01-459-5527	209	20
5340-01-459-6017	209	21
3020-01-459-7243	257	23
5310-01-460-2173	135	19
4720-01-460-2224	25	152
[redacted]	[redacted]	[redacted]
5340-01-460-2466	187	30
3020-01-460-2617	90	21
5330-01-460-3123	90	30
2510-01-460-3299	39	12
5306-01-460-3367	33	7
4720-01-460-3893	60	29
4720-01-460-4573	61	41
4720-01-460-4670	61	18
4140-01-460-5968	208	8

STOCK NUMBER	FIG.	ITEM
	209	8
4140-01-460-6814	191	6
5340-01-460-6884	190	12
5340-01-460-6897	190	20
4140-01-460-6912	208	9
	209	9
4140-01-460-7202	208	13
	209	13
4010-01-460-7225	30	10
	211	25
6685-01-460-7482	81	42
3120-01-460-8206	38	104
5310-01-460-8846	182	37
4710-01-460-8918	132	94
	133	120
5310-01-460-8984	187	29
5180-01-460-9328	325	13
5340-01-460-9461	12	6
4330-01-460-9939	81	15
	239	5
5995-01-461-4522	31	13
	211	3
2590-01-461-5874	KITS	6
6210-01-461-5942	112	18
5340-01-461-8092	38	105
4720-01-462-1281	BULK	17
5340-01-462-2394	31	17
5340-01-462-2405	12	20
5310-01-462-5300	15	33
5995-01-462-6430	272	51
	278	50
5340-01-462-6444	233	2
[redacted]	[redacted]	[redacted]

STOCK NUMBER	FIG.	ITEM
5340-01-462-6520	223	17
5990-01-462-6961	223	23
6105-01-462-7177	236	27
[redacted]	[redacted]	[redacted]
	[redacted]	[redacted]
5990-01-462-8415	257	36
[redacted]	[redacted]	[redacted]
7040-01-462-8859	271	79
	275	82
5995-01-462-9063	272	31
	278	10
5990-01-462-9228	257	12
5935-01-462-9312	271	45
	275	47
	[redacted]	[redacted]
5935-01-462-9319	268	29
[redacted]	[redacted]	[redacted]
	[redacted]	[redacted]
5340-01-462-9644	20	16
5340-01-462-9646	20	6
5340-01-462-9647	20	38
5340-01-462-9654	20	29
5365-01-463-0116	20	7
3010-01-463-0406	257	14
5999-01-463-0569	98	32
	106	32
	210	23
	261	13
	268	30
	271	7
	275	3
	[redacted]	[redacted]
	[redacted]	[redacted]

STOCK NUMBER	FIG.	ITEM
[redacted]	[redacted]	[redacted]
3020-01-463-0723	257	34
4210-01-463-0807	127	23
5305-01-463-1025	271	62
	275	64
5999-01-463-1102	271	3
	271	75
	275	76
5999-01-463-1105	99	15
	107	16
	[redacted]	[redacted]
5365-01-463-1151	20	20
2520-01-463-1229	257	31
5999-01-463-1448	99	29
	107	34
	127	102
	[redacted]	[redacted]
	268	7
	[redacted]	[redacted]
	276	7
	[redacted]	[redacted]
5995-01-463-1455	272	43
	278	41
5995-01-463-1482	272	10
	278	13
5995-01-463-1517	272	11
	278	14
3010-01-463-1518	257	11
5995-01-463-1556	272	47
	278	45
4010-01-463-1743	271	77
	275	79
5895-01-463-1823	[redacted]	[redacted]

STOCK NUMBER	FIG.	ITEM
[redacted]	[redacted]	[redacted]
3010-01-463-1870	223	24
5995-01-463-2022	272	14
	278	19
5995-01-463-2034	272	58
	278	56
5310-01-463-2050	130	1
5995-01-463-2113	272	7
	278	8
5315-01-463-2361	271	76
	275	78
5315-01-463-2362	271	68
	275	70
5995-01-463-2396	272	60
	278	58
5995-01-463-2403	272	66
	278	64
[redacted]	[redacted]	[redacted]
[redacted]	[redacted]	[redacted]
5315-01-463-2626	271	67
	275	69
5995-01-463-3134	272	8
	278	11
5995-01-463-3191	278	35
5995-01-463-3510	272	22
	278	36
5995-01-463-3806	272	44
	278	42
5995-01-463-3971	272	59
	278	57
3010-01-463-4011	257	15
5995-01-463-4125	272	46
	278	44

STOCK NUMBER	FIG.	ITEM
5995-01-463-4154	272	42
	278	39
5995-01-463-4254	272	3
	278	7
6150-01-463-4328	272	21
	278	34
5360-01-463-4413	257	32
5995-01-463-5352	272	48
	278	46
5340-01-463-6227	271	61
	275	63
5340-01-463-6724	261	34
5365-01-463-8485	257	1
[redacted]	[redacted]	[redacted]
[redacted]	[redacted]	[redacted]
[redacted]	[redacted]	[redacted]
[redacted]	[redacted]	[redacted]
5340-01-464-2471	270	25
	274	25
5340-01-464-2475	98	23
	99	47
	106	22
	107	48
	274	3
	275	39
[redacted]	[redacted]	[redacted]
	[redacted]	[redacted]
5340-01-464-2538	271	56
	275	58
[redacted]	[redacted]	[redacted]
	[redacted]	[redacted]
5340-01-464-2576	271	71
	275	73

STOCK NUMBER	FIG.	ITEM
5340-01-464-2795	184	51
[redacted]	[redacted]	[redacted]
5340-01-464-2893	257	2
5340-01-464-2908	257	37
7690-01-464-2937	169	9
5340-01-464-3377	271	70
	275	72
3020-01-464-3654	90	8
5340-01-464-3725	274	42
5340-01-464-4093	99	4
	107	4
5340-01-464-4111	99	38
	107	38
9515-01-464-4395	30	43
9515-01-464-4423	30	45
5340-01-464-4428	30	46
7690-01-464-4689	81	16
5340-01-464-4706	29	22
9515-01-464-4712	30	33
	211	22
5340-01-464-4718	30	41
	211	5
5340-01-464-4725	30	42
	211	18
9535-01-464-4783	29	8
	211	34
6150-01-464-4812	95	63
	103	62
5340-01-464-4813	30	30
5999-01-464-6010	257	19
	271	49
	275	51
6150-01-464-6218	100	13
	108	10
5342-01-464-6307	145	15
6150-01-464-6852	105	19
5340-01-464-6870	107	56
6150-01-464-6890	95	81
	103	92
	110	56
4210-01-464-6946	128	4
5961-01-464-7662	95	82
	103	91
	110	45
5340-01-464-7761	99	26
	107	8
6150-01-464-7827	100	41
	108	39
6150-01-464-8309	95	77
	103	78
6625-01-464-8362	95	80
	103	81
	110	41
5999-01-464-8375	95	90
	103	88
	110	53
6150-01-464-8751	100	4
	108	4
7690-01-464-9060	187	6
5340-01-465-4631	271	64
	275	66
2520-01-465-5184	144	4
6115-01-465-5822	59	14
2540-01-465-5837	154	16
2540-01-465-5960	154	22
[redacted]	[redacted]	[redacted]

STOCK NUMBER	FIG.	ITEM
4210-01-465-6487	128	6
6150-01-465-7735	100	15
	108	13
6150-01-465-7751	100	20
	108	21
6150-01-465-7759	100	16
	108	14
1290-01-465-8585	233	9
1290-01-465-8591	233	1
9535-01-465-9630	185	4
9535-01-465-9691	31	28
5340-01-466-0882	31	7
	211	32
2520-01-466-3753	58	1
5340-01-466-4172	31	27
3110-01-466-6066	191	16
[redacted]	[redacted]	[redacted]
2590-01-466-7794	165	14
5310-01-466-8949	145	14
4820-01-466-9094	25	153
[redacted]	[redacted]	[redacted]
	[redacted]	[redacted]
5340-01-467-0982	31	10
	211	30
[redacted]	[redacted]	[redacted]
1005-01-467-3278	241	23
3040-01-467-3318	241	29
5310-01-467-3322	241	46
5935-01-467-4614	241	22
5305-01-467-4650	241	58
1005-01-467-4703	241	30
5365-01-467-4971	241	34
5365-01-467-5182	241	42

STOCK NUMBER	FIG.	ITEM
5930-01-467-6321	241	9
5940-01-467-6615	241	49
5340-01-467-6641	241	59
5360-01-467-6702	241	39
5340-01-467-7565	241	6
3110-01-467-7879	241	1
5905-01-467-8650	241	51
1005-01-467-9292	241	33
2541-01-468-0145	241	36
3040-01-468-0307	241	54
3010-01-468-0310	241	52
2541-01-468-0591	241	48
4210-01-468-1893	128	3
4210-01-468-1899	128	5
6150-01-468-3235	75	40
5995-01-468-3368	241	19
5930-01-468-3384	241	4
5305-01-468-3569	241	31
5360-01-468-4267	241	8
1440-01-468-4507	241	35
5930-01-468-4514	241	2
1090-01-468-4609	241	40
6695-01-468-4951	241	37
3040-01-468-5405	241	15
2530-01-468-5466	241	44
4240-01-468-5718	128	1
5360-01-468-5885	241	28
5315-01-469-0168	241	55
1005-01-469-0646	241	14
6140-01-469-9184	95	28
	103	28
5325-01-469-9953	213	27
9515-01-469-9973	184	106

STOCK NUMBER	FIG.	ITEM
	185	122
2990-01-470-6025	41	10
5340-01-470-8483	118	57
5310-01-470-8821	271	82
	275	84
5930-01-471-0637	96	30
	104	30
5935-01-471-1007	271	47
	275	49
5310-01-471-9258	95	55
	103	51
	109	73
	110	44
5310-01-472-0047	98	38
	106	37
5310-01-472-3763	131	11
5305-01-472-4881	173	24
5305-01-472-5084	131	18
4510-01-472-5649	173	11
6220-01-472-5672	94	75
	102	78
6220-01-472-5863	94	54
	102	69
5365-01-472-5903	173	3
6160-01-472-6363	95	68
	103	67
6145-01-472-6463	241	18
6920-01-472-7493	327	2
5340-01-472-7776	107	54
5340-01-472-8046	131	14
1240-01-472-8348	[redacted]	[redacted]
	305	78
5975-01-472-8759	173	9
7690-01-472-9203	171	11
5995-01-472-9271	272	16
	278	21
5995-01-472-9286	272	17
	278	22
5975-01-472-9370	99	48
	107	49
5995-01-472-9616	272	20
	278	25
5995-01-472-9746	272	19
	278	24
5995-01-472-9762	272	18
	278	23
2920-01-472-9908	75	16
2920-01-472-9910	75	25
6125-01-473-0289	75	1
7690-01-473-0819	158	53
	159	50
5310-01-473-0839	75	7
7690-01-473-1177	158	58
7690-01-473-1182	158	62
	159	48
2540-01-473-1293	131	2
2540-01-473-1299	131	6
5985-01-473-1313	108	55
6150-01-473-1579	272	15
	278	20
4140-01-473-1765	154	54
4720-01-473-1893	154	15
7690-01-473-2014	158	60
7690-01-473-2016	158	48
6150-01-473-2454	100	77
	108	52

STOCK NUMBER	FIG.	ITEM
7690-01-473-2614	158	50
2540-01-473-2993	131	8
2540-01-473-3015	131	7
2540-01-473-3017	131	1
2590-01-473-3390	131	24
3130-01-473-3579	75	14
5325-01-473-3613	75	37
6150-01-473-4024	95	76
	103	77
4140-01-473-4758	75	22
5340-01-473-4812	75	36
[redacted]	[redacted]	[redacted]
5305-01-473-6081	75	33
6220-01-473-7532	102	60
6220-01-473-7539	102	77
5330-01-473-8287	75	35
4730-01-473-9225	59	84
5340-01-474-0736	190	49
5340-01-474-0740	257	8
5340-01-474-0767	271	44
	275	46
4320-01-474-2646	KITS	20
5315-01-474-3125	181	47
4730-01-474-5375	127	9
7690-01-474-9834	25	77
5310-01-475-0455	96	32
	104	32
3990-01-475-0590	158	14
	159	30
3990-01-475-0620	130	31
	158	13
	159	13
3990-01-475-0624	158	15
	159	16
3990-01-475-0630	158	22
3990-01-475-0631	158	6
	159	6
3990-01-475-0634	158	21
3120-01-475-1660	145	23
5340-01-475-2343	167	2
5340-01-475-2345	167	4
5935-01-475-2449	271	46
	275	48
4520-01-475-2614	146	19
5340-01-475-3124	146	17
5340-01-475-3659	158	24
5340-01-475-3765	158	10
	159	10
5340-01-475-4469	158	7
	159	7
4720-01-475-4481	BULK	7
5340-01-475-4504	158	29
	159	28
5340-01-475-4576	158	9
	159	9
5340-01-475-4604	96	34
	104	34
2920-01-475-4730	75	32
2920-01-475-4740	75	18
5340-01-475-5111	169	4
5340-01-475-6804	173	23
5340-01-475-6807	173	20
2510-01-475-6855	27	10
	28	10
5340-01-475-6931	173	22
5342-01-475-8632	173	27

STOCK NUMBER	FIG.	ITEM
4210-01-475-8665	157	35
[redacted]	[redacted]	[redacted]
[redacted]	[redacted]	[redacted]
[redacted]	[redacted]	[redacted]
1005-01-476-5359	186	3
4730-01-477-6587	62	220
5120-01-477-6955	319	9
9535-01-477-7830	261	31
9535-01-477-7856	184	1
	185	1
6110-01-478-2381	98	30
	106	30
[redacted]	[redacted]	[redacted]
	[redacted]	[redacted]
	[redacted]	[redacted]
4910-01-478-3594	305	44
	311	1
9515-01-478-3820	31	22
5340-01-478-3856	31	12
5340-01-478-3871	31	4
	211	35
9515-01-478-4065	31	18
5340-01-478-4101	31	9
6150-01-478-4512	95	83
	103	90
	110	49
5310-01-478-5935	94	79
	102	82
2540-01-479-0389	32	1
2540-01-479-0396	31	45
5995-01-479-1022	284	1
	[redacted]	[redacted]
5340-01-479-1338	31	20
7195-01-480-2532	173	12
5340-01-480-4691	31	35
	211	21
5340-01-480-4760	31	31
5999-01-480-5398	106	32
3040-01-481-0612	312	12
[redacted]	[redacted]	[redacted]
[redacted]	[redacted]	[redacted]
9515-01-481-3136	30	21
	211	26
5340-01-481-3172	29	14
	211	12
5340-01-481-3181	31	36
5340-01-481-3185	31	39
5325-01-481-3411	95	11
	103	11
[redacted]	[redacted]	[redacted]
5935-01-481-5247	272	6
	278	4
	[redacted]	[redacted]
3830-01-481-5376	166	4
5360-01-481-5479	270	16
	274	18
7690-01-481-6825	271	29
	275	33
6150-01-481-6859	100	14
	108	11
5340-01-481-7354	31	34
5970-01-482-1073	75	9
	BULK	24
5970-01-482-1074	75	38
5365-01-482-1538	181	14
2590-01-482-1662	117	64

STOCK NUMBER	FIG.	ITEM
5305-01-482-3701	75	43
5310-01-482-6901	95	39
	103	39
	103	96
	109	59
	110	60
5340-01-483-0839	169	2
2910-01-483-1256	KITS	13
5340-01-483-8710	187	1
5306-01-484-1266	131	10
5340-01-484-6872	94	25
	102	30
5330-01-484-7227	118	46
	119	32
[redacted]	[redacted]	[redacted]
	[redacted]	[redacted]
3830-01-485-6531	31	29
5340-01-485-8426	38	9
5340-01-485-8442	31	1
5355-01-486-6089	221	16
	BULK	33
	BULK	42
6150-01-486-6716	272	49
	278	47
4240-01-486-7210	162	19
	210	9
6150-01-487-0786	271	55
5340-01-487-1108	210	19
5340-01-487-1145	172	30
	173	53
	282	6
	[redacted]	[redacted]
5340-01-487-8198	173	56

STOCK NUMBER	FIG.	ITEM
	282	9
5310-01-490-0123	126	45
5330-01-490-0840	62	24
4730-01-490-0968	133	121
5310-01-490-2588	85	9
5999-01-490-5102	107	23
	268	1
	276	1
4140-01-490-6087	85	17
5330-01-490-6605	122	4
5340-01-490-6868	85	15
3110-01-490-6980	85	6
	85	14
5365-01-490-7642	85	16
5999-01-490-9701	282	14
5365-01-491-0578	85	8
1290-01-491-2653	232	16
4140-01-491-2910	85	1
3040-01-491-4111	85	13
3040-01-491-4237	85	11
[redacted]	[redacted]	[redacted]
5310-01-492-0928	59	66
	172	1
6150-01-492-1843	272	23
	278	32
5340-01-492-3318	99	18
	107	33
	268	4
	276	4
6150-01-492-4611	272	41
	278	38
[redacted]	[redacted]	[redacted]
	[redacted]	[redacted]

STOCK NUMBER	FIG.	ITEM
5340-01-492-4738	[redacted]	[redacted]
	[redacted]	[redacted]
5120-01-493-5213	305	72
9515-01-493-5902	261	32
4730-01-493-6514	62	191
5310-01-494-2307	94	78
	102	81
5980-01-494-3648	112	7
5980-01-494-6335	112	12
5935-01-494-8038	272	13
	278	6
	[redacted]	[redacted]
6110-01-494-9162	[redacted]	[redacted]
	[redacted]	[redacted]
5310-01-494-9745	138	24
	200	23
4730-01-495-1952	133	93
7021-01-495-2821	173	33
3460-01-495-2895	187	34
7690-01-495-8143	128	7
[redacted]	[redacted]	[redacted]
9515-01-496-1178	17	1
5340-01-496-1887	40	18
5340-01-496-2648	154	52
7021-01-496-4263	106	61
7690-01-496-4461	127	52
5340-01-496-5101	31	19
	211	33
6160-01-496-5260	95	56
	103	55
6150-01-496-6576	305	93
5340-01-496-9258	154	39
7025-01-496-9879	172	82

STOCK NUMBER	FIG.	ITEM
5315-01-497-1821	145	21
6150-01-497-2058	100	37
	108	35
[redacted]	[redacted]	[redacted]
[redacted]	[redacted]	[redacted]
7690-01-497-2286	155	17
9905-01-497-8199	98	10
	106	10
9905-01-497-8200	155	16
2541-01-497-9083	184	5
6150-01-498-1141	316	8
6605-01-498-1337	272	71
	278	68
5365-01-498-1965	34	6
5331-01-498-2275	122	6
5330-01-498-2585	122	3
5305-01-498-4211	122	5
2510-01-498-9350	34	7
2590-01-498-9373	34	1
2510-01-498-9494	34	8
5340-01-499-1032	34	2
5340-01-499-1679	173	52
5999-01-499-5490	282	14
	[redacted]	[redacted]
6150-01-499-5985	95	92
	103	93
	110	57
6150-01-499-6017	316	9
4820-01-499-6578	60	33
2540-01-500-6529	131	21
5306-01-500-9026	131	4
5930-01-500-9516	270	36
	274	40

STOCK NUMBER	FIG.	ITEM
2540-01-500-9674	131	12
5310-01-500-9963	131	22
9320-01-501-0006	BULK	32
6130-01-501-0991	106	40
2540-01-501-1054	31	25
6150-01-501-3151	272	74
	278	70
2990-01-501-3189	41	3
[redacted]	[redacted]	[redacted]
5340-01-501-5581	29	39
	211	29
5340-01-501-5622	270	37
	274	36
5930-01-501-9216	270	35
	274	39
8145-01-502-2474	272	67
	278	65
6605-01-502-2475	272	68
	278	66
9535-01-502-3294	2	41
6150-01-502-9532	96	38
	104	37
4210-01-503-1522	127	118
2520-01-503-3460	144	5
5945-01-504-5656	62	243
5340-01-504-8568	93	31
1095-01-505-0199	186	11
5310-01-505-0243	184	13
	184	43
	185	40
	[redacted]	[redacted]
	296	19
5310-01-505-0245	136	14
	140	27
	146	29
	154	21
	185	79
	211	7
	[redacted]	[redacted]
	296	10
	[redacted]	[redacted]
5340-01-505-4152	270	18
	274	20
5995-01-505-5997	100	70
	108	43
5995-01-505-5999	100	68
	108	42
5995-01-505-6001	100	71
	108	44
5995-01-505-6003	108	45
5995-01-505-7576	108	51
5995-01-505-7577	108	48
5995-01-505-7578	100	72
	108	46
5995-01-505-7579	100	74
	108	47
9905-01-505-7732	85	3
5963-01-505-8634	75	29
2910-01-506-9499	118	47
	119	35
2540-01-507-7052	131	17
7690-01-513-0811	171	18
5995-01-513-3333	272	28
	278	31
5340-01-513-3862	118	51
5999-01-513-4413	98	54

STOCK NUMBER	FIG.	ITEM
	106	57
	173	41
5340-01-513-4445	25	93
5340-01-513-5200	99	12
	107	29
5340-01-513-5224	98	45
	106	43
5342-01-513-9684	39	33
5340-01-514-0439	40	5
2540-01-514-6187	20	39
2540-01-514-6193	20	19
5305-01-516-2620	43	49
	44	45
5310-01-516-3509	138	18
	173	45
	194	10
	198	7
	200	33
	300	17
5310-01-516-3969	138	55
4920-01-516-5707	[redacted]	[redacted]
	[redacted]	[redacted]
5340-01-516-6770	95	33
	103	34
	109	50
	162	3
5315-01-517-5741	181	28
5340-01-517-5759	181	29
5305-01-517-5770	181	3
[redacted]	[redacted]	[redacted]
	[redacted]	[redacted]
[redacted]	[redacted]	[redacted]
2530-01-518-8591	70	8

STOCK NUMBER	FIG.	ITEM
2520-01-519-8291	65	37
6150-01-519-8293	65	38
5365-01-520-7147	131	13
5985-01-521-1775	30	11
	211	2
5331-01-521-3406	68	2
	72	2
6515-01-521-3910	305	106
7021-01-522-1216	106	61
6680-01-523-7491	96	33
	104	33
5310-01-524-5026	49	5
	49	14
5340-01-525-8093	320	2
[redacted]	[redacted]	[redacted]
	[redacted]	[redacted]
[redacted]	[redacted]	[redacted]
	[redacted]	[redacted]
5340-01-526-6503	190	5
	[redacted]	[redacted]
5340-01-526-6510	270	9
	274	12
	[redacted]	[redacted]
[redacted]	[redacted]	[redacted]
[redacted]	[redacted]	[redacted]
5360-01-526-6543	187	35
5310-01-527-9521	173	16
5310-01-527-9522	172	65
5305-01-528-2446	42	11
	43	11
	44	11
5330-01-529-0064	38	122
5307-01-529-6618	12	15

STOCK NUMBER	FIG.	ITEM
2540-01-529-6903	12	12
2540-01-529-7311	12	25
2540-01-529-7336	12	23
5310-01-530-3969	227	9
2520-01-531-3011	58	5
5310-01-531-3912	136	19
	172	59
5310-01-531-3929	157	21
5310-01-531-3950	135	10
	136	2
	138	47
5310-01-531-7280	98	39
	106	38
	172	33
	193	29
	194	14
	300	18
5310-01-531-7320	138	20
5310-01-531-7323	132	64
	133	81
2590-01-531-7590	169	1
2510-01-531-9565	KITS	14
1005-01-532-6153	181	29
2590-01-532-6627	12	24
5120-01-534-1728	319	78
5895-01-534-4648	328	8
5305-01-535-2370	123	29
5895-01-535-3045	[redacted]	[redacted]
	268	27
[redacted]	[redacted]	[redacted]
[redacted]	[redacted]	[redacted]
	[redacted]	[redacted]
[redacted]	[redacted]	[redacted]

STOCK NUMBER	FIG.	ITEM
4910-01-535-5999	319	79
5340-01-535-7259	181	7
4730-01-536-0492	123	17
5340-01-536-0576	125	6
5340-01-536-0668	125	10
2530-01-536-1542	123	31
5340-01-536-2125	101	1
4910-01-536-2369	320	6
4730-01-536-2666	132	77
	133	115
5365-01-536-3044	38	82
4730-01-536-4186	25	103
2530-01-536-4264	125	9
3040-01-536-4363	124	1
5930-01-536-5851	98	5
	106	5
6150-01-536-6201	108	57
6150-01-536-6575	108	56
6620-01-536-7799	25	104
	132	76
	133	114
9540-01-536-8022	25	23
2590-01-536-8059	146	31
5340-01-536-8095	93	34
2540-01-536-8101	25	17
6695-01-536-8274	59	67
	81	45
6695-01-536-8287	59	72
6695-01-536-8294	59	82
	65	11
6695-01-536-8298	59	73
6150-01-536-8377	100	44
	108	59

STOCK NUMBER	FIG.	ITEM
6150-01-536-8700	100	51
	108	62
4730-01-536-8734	59	71
4730-01-536-8735	81	46
6150-01-536-8742	100	45
	108	60
6150-01-536-8759	100	49
	108	66
6150-01-536-8764	100	47
	108	64
2815-01-536-8857	101	2
6150-01-536-9392	100	52
	108	63
5340-01-536-9938	93	32
[redacted]	[redacted]	[redacted]
[redacted]	[redacted]	[redacted]
5340-01-537-0138	93	12
9320-01-537-0224	93	14
4730-01-537-0246	25	102
5330-01-537-0610	93	22
5340-01-537-2609	93	2
4720-01-537-6364	57	103
4720-01-537-6368	57	93
1005-01-537-6902	261	18
3040-01-537-7509	93	28
3040-01-537-7978	93	27
6150-01-538-2881	108	61
6150-01-538-3080	100	48
	108	67
6150-01-538-3087	100	50
	108	65
6150-01-538-3919	59	81
5999-01-541-1770	282	14

STOCK NUMBER	FIG.	ITEM
	[redacted]	[redacted]
6150-01-541-6995	100	57
	108	76
6150-01-541-6997	100	59
	108	78
[redacted]	[redacted]	[redacted]
	[redacted]	[redacted]
7025-01-541-7694	106	62
5895-01-541-8031	271	10
	275	6
[redacted]	[redacted]	[redacted]
	[redacted]	[redacted]
6110-01-542-1185	99	5
	[redacted]	[redacted]
6150-01-542-4876	319	70
5995-01-542-5211	278	76
5995-01-542-5212	278	78
5995-01-542-5213	261	37
5995-01-542-5214	272	80
	278	77
5995-01-542-5216	261	36
[redacted]	[redacted]	[redacted]
[redacted]	[redacted]	[redacted]
	[redacted]	[redacted]
5995-01-543-0992	272	76
	278	80
5315-01-543-1720	271	52
	275	54
5995-01-543-3431	261	24
[redacted]	[redacted]	[redacted]
5340-01-543-9219	261	25
5340-01-544-2226	127	92
5340-01-544-2876	271	4

STOCK NUMBER	FIG.	ITEM
	275	7
5365-01-544-5986	62	75
5305-01-544-7389	83	10
	87	2
3990-01-544-8613	158	43
	159	43
9515-01-544-8703	31	32
9515-01-544-8840	31	33
5975-01-545-0019	98	51
	106	54
6150-01-545-0069	108	53
6150-01-545-0086	316	12
6150-01-545-0113	108	58
5365-01-545-3467	98	40
	106	39
5365-01-545-4508	257	7
1005-01-545-4546	KITS	17
5340-01-545-7603	169	3
2510-01-546-3315	190	39
6150-01-546-4508	278	79
[redacted]	[redacted]	[redacted]
9905-01-546-6421	75	20
[redacted]	[redacted]	[redacted]
5310-01-547-2709	296	4
5310-01-547-2721	296	15
5340-01-547-4019	296	12
6240-01-547-5202	295	1
5340-01-547-5204	296	1
5985-01-547-5953	211	4
5340-01-547-8566	296	2
5305-01-547-8579	296	11
5340-01-547-8594	296	6
5340-01-547-8612	296	20

STOCK NUMBER	FIG.	ITEM
5340-01-547-8623	296	16
5920-01-547-8757	295	2
6650-01-547-8928	295	4
6150-01-547-8946	296	14
6650-01-548-0297	295	3
5310-01-548-2053	59	80
	140	9
5305-01-548-2859	109	22
[redacted]	[redacted]	[redacted]
2590-01-549-3191	169	8
9515-01-549-3869	29	46
9515-01-549-3871	29	54
9510-01-549-3872	29	53
9515-01-549-3873	29	56
9510-01-549-3874	29	55
9515-01-549-3875	29	52
9510-01-549-3876	29	49
5365-01-549-3877	29	44
9515-01-549-3878	29	45
5310-01-551-9242	227	11
[redacted]	[redacted]	[redacted]
[redacted]	[redacted]	[redacted]
[redacted]	[redacted]	[redacted]
[redacted]	[redacted]	[redacted]
[redacted]	[redacted]	[redacted]
6605-01-553-6536	278	68
5340-01-554-8850	94	67
	102	70
5306-01-554-9327	131	16
5342-01-555-0838	94	66
	102	68
5305-01-555-8107	162	68
4820-01-556-3811	117	7

STOCK NUMBER	FIG.	ITEM
5305-01-556-7131	160	12
4730-01-558-2937	117	71
	154	19
	155	7
9905-01-559-6193	239	2
9905-01-559-6194	237	17
9905-01-559-6198	255	15
9905-01-559-6199	240	2
5340-01-560-2902	300	51
5975-01-560-3035	300	13
5180-01-560-4244	305	108
9905-01-560-4926	235	40
5310-01-560-8068	73	19
9905-01-560-9107	145	38
9905-01-560-9108	24	1
5340-01-561-2632	152	3
	153	6
	153	16
1290-01-561-5271	232	16
5305-01-561-8852	59	16
9320-01-561-9490	BULK	28
9905-01-561-9573	73	99
9905-01-561-9574	174	8
	175	5
	[redacted]	[redacted]
6115-01-562-6264	59	14
6605-01-563-6713	278	66
5310-01-563-8714	9	17
2540-01-564-3164	189	4
5340-01-564-3167	189	11
2540-01-564-3174	189	13
5340-01-564-3187	189	17
5340-01-564-3190	189	16
5340-01-564-3616	189	18
5340-01-564-4299	189	10
5340-01-564-4382	189	5
2540-01-564-5231	184	75
2510-01-564-5236	189	1
1080-01-564-9874	296	21
2540-01-564-9987	189	12
5340-01-565-5491	272	5
5355-01-565-8612	172	40
4940-01-565-8793	305	112
4210-01-565-9982	127	122
5340-01-565-9991	2	5
5340-01-566-1539	300	55
5340-01-566-1547	300	23
5340-01-566-1551	300	10
5340-01-566-1556	300	57
9515-01-566-1713	2	26
9515-01-566-1714	2	25
5340-01-566-1715	2	15
9515-01-566-1716	2	21
4030-01-566-1718	2	12
5340-01-566-1719	2	16
5315-01-566-2411	2	13
5315-01-566-2413	2	24
4210-01-566-2417	127	121
6130-01-566-3430	300	47
5305-01-566-3834	130	32
2540-01-566-3841	2	1
5365-01-566-4591	134	28
6150-01-566-6261	127	131
6150-01-566-6262	127	133
5985-01-566-7866	300	21
5340-01-566-7868	300	14

STOCK NUMBER	FIG.	ITEM
5985-01-566-7896	300	30
5940-01-566-9824	109	12
	110	9
5940-01-566-9825	109	17
	110	11
5310-01-566-9850	290	8
	[redacted]	[redacted]
6150-01-567-0093	127	132
5340-01-567-2411	127	128
5340-01-567-2448	127	116
4710-01-567-2452	127	130
1005-01-567-3012	213	6
5995-01-567-4542	300	70
5340-01-567-4543	213	4
6150-01-567-4544	300	61
6150-01-567-5365	300	62
5995-01-567-5366	300	63
5995-01-567-5367	300	67
5340-01-567-9056	127	117
5340-01-567-9413	127	123
4730-01-567-9422	162	50
	210	3
2590-01-568-1253	127	127
5310-01-568-1733	187	37
5310-01-568-1781	135	15
	136	10
5310-01-568-1787	158	32
	159	32
2540-01-568-2561	158	65
	159	46
5340-01-568-3550	300	9
5999-01-568-6545	97	8
	105	5
	173	58
	282	14
	[redacted]	[redacted]
5310-01-569-1372	158	37
	159	37
7025-01-569-3207	328	4
9905-01-569-9900	236	13
[redacted]	[redacted]	[redacted]
	[redacted]	[redacted]
[redacted]	[redacted]	[redacted]
5310-01-570-3748	109	32
[redacted]	[redacted]	[redacted]
7025-01-570-5288	328	3
7025-01-570-5739	106	62
5305-01-570-6440	172	28
	173	55
5310-01-571-1429	185	37
2930-01-571-1945	57	39
5310-01-571-4769	[redacted]	[redacted]
	300	2
	[redacted]	[redacted]
5303-01-571-5001	135	14
	136	5
1430-01-571-5812	244	2
	[redacted]	[redacted]
5305-01-571-7366	9	1
	[redacted]	[redacted]
5305-01-571-7795	200	24
[redacted]	[redacted]	[redacted]
[redacted]	[redacted]	[redacted]
[redacted]	[redacted]	[redacted]
	[redacted]	[redacted]
[redacted]	[redacted]	[redacted]

STOCK NUMBER	FIG.	ITEM
	[redacted]	[redacted]
5895-01-574-1591	275	6
6110-01-574-2241	99	5
	[redacted]	[redacted]
1290-01-574-3206	233	1
1290-01-574-4863	233	9
6145-01-574-6696	183	23
5340-01-574-7571	183	10
5340-01-574-9618	183	20
5930-01-575-6164	112	14
5930-01-575-6479	112	15
3110-01-575-7199	183	22
5310-01-576-0742	187	20
2590-01-576-2424	136	16
	198	11
5310-01-576-4351	140	1
6150-01-577-4716	100	21
	108	22
5130-01-577-6492	319	16
5995-01-578-4854	278	72
	[redacted]	[redacted]
4720-01-579-0160	127	8
5340-01-579-0699	127	27
5999-01-579-4194	282	14
6020-01-579-4424	278	71
	[redacted]	[redacted]
9905-01-580-1321	112	19
5995-01-580-2379	272	29
5995-01-580-2381	272	24
4720-01-580-9023	60	9
5310-01-581-0093	38	51
6110-01-581-0432	59	15
2510-01-581-0436	97	7

STOCK NUMBER	FIG.	ITEM
	105	3
4720-01-581-0491	127	129
5305-01-581-3318	171	15
2520-01-581-4184	KITS	30
7025-01-581-6251	271	54
	275	56
2520-01-582-0853	73	68
	86	23
3040-01-582-2448	132	53
	133	70
5330-01-582-3005	73	69
	86	24
6150-01-582-5556	144	7
6140-01-582-5710	109	23
	110	15
5340-01-582-6352	144	2
5306-01-584-5117	227	15
5930-01-584-7399	112	13
4730-01-585-2213	81	49
5310-01-585-2714	172	48
5340-01-585-6546	227	13
2520-01-586-5468	62	302
5340-01-586-5520	282	9
5315-01-586-5526	282	3
5340-01-586-5533	187	19
5315-01-586-5537	282	2
5340-01-586-5541	270	19
	274	21
5340-01-586-5544	282	1
4210-01-586-7472	127	124
5340-01-586-9259	119	10
5305-01-586-9649	172	42
5305-01-586-9662	271	42

STOCK NUMBER	FIG.	ITEM
[redacted]	[redacted]	[redacted]
5935-01-586-9842	100	9
5935-01-586-9850	100	10
[redacted]	[redacted]	[redacted]
7025-01-587-3576	271	39
	275	42
5935-01-587-3703	100	11
5340-01-587-3815	94	76
	102	79
2590-01-587-4283	109	40
2590-01-587-4289	110	29
[redacted]	[redacted]	[redacted]
[redacted]	[redacted]	[redacted]
[redacted]	[redacted]	[redacted]
5995-01-587-5198	100	37
	108	35
6150-01-587-5203	109	24
5995-01-587-5212	100	58
	108	77
5930-01-587-5214	98	27
	106	26
	133	1
6150-01-587-5264	109	10
5995-01-587-5271	100	40
	108	38
3110-01-587-5927	138	42
3110-01-587-5936	138	43
2530-01-587-6141	48	2
	48	2
6130-01-587-6330	270	40
	274	50
5930-01-587-6525	112	8
2530-01-587-6759	49	11
2530-01-587-6760	49	12
2530-01-587-6761	49	7
2530-01-587-6762	49	10
5340-01-587-6763	49	13
5330-01-587-7265	119	22
5999-01-587-7385	99	6
	107	23
	268	1
	276	1
5315-01-587-8390	138	50
5340-01-588-0210	141	40
5340-01-588-0211	141	6
5340-01-588-0212	110	16
5340-01-588-0223	119	55
5340-01-588-0225	28	33
1005-01-588-0403	121	4
5998-01-588-0715	112	1
6150-01-588-2012	100	39
	108	37
5995-01-588-2031	100	72
	108	46
5995-01-588-2042	108	44
4010-01-588-2325	183	15
5340-01-588-2543	133	47
6160-01-588-2721	110	27
5305-01-588-2749	138	51
6150-01-588-2821	100	41
	108	39
2590-01-588-2836	109	35
2590-01-588-2865	109	33
2590-01-588-2873	109	30
2540-01-588-2976	136	21
6160-01-588-3073	109	28

STOCK NUMBER	FIG.	ITEM
2590-01-588-3086	109	29
2590-01-588-3460	109	9
5855-01-588-3763	93	13
2590-01-588-3830	119	66
5315-01-588-4001	138	38
5340-01-588-4004	138	57
5340-01-588-4006	138	31
3130-01-588-4008	138	48
5340-01-588-4015	81	24
5330-01-588-4018	188	18
6160-01-588-4367	110	7
6160-01-588-4709	110	32
[redacted]	[redacted]	[redacted]
[redacted]	[redacted]	[redacted]
6160-01-588-5149	109	5
5310-01-588-5571	2	30
5855-01-588-5668	97	25
	105	16
2540-01-588-5797	126	44
6150-01-588-6300	100	65
6150-01-588-6301	100	67
6150-01-588-6302	100	64
2910-01-588-6898	119	21
5340-01-588-6994	136	22
4320-01-588-7192	2	42
2540-01-588-8426	138	2
2540-01-588-8429	138	1
5360-01-588-8458	138	12
5305-01-588-8519	109	36
6160-01-588-8889	110	24
5340-01-588-9786	138	26
5330-01-588-9917	188	19
5330-01-588-9920	188	20

STOCK NUMBER	FIG.	ITEM
4820-01-589-0169	119	48
2540-01-589-1100	138	41
2540-01-589-1103	138	45
2540-01-589-1107	138	60
2540-01-589-1115	138	25
2540-01-589-1117	138	22
2540-01-589-1119	138	11
2540-01-589-1139	138	10
2540-01-589-1165	138	3
4720-01-589-1315	133	88
4720-01-589-1324	133	102
5340-01-589-1553	2	19
4720-01-589-1558	133	87
4720-01-589-1568	133	101
5340-01-589-1627	133	136
5340-01-589-1635	43	10
	44	10
5340-01-589-1639	43	48
	44	46
5340-01-589-1643	43	22
	44	22
5340-01-589-1649	130	34
5365-01-589-1657	2	40
5315-01-589-1710	140	30
5310-01-589-1714	2	33
5315-01-589-1743	130	27
5365-01-589-1835	110	17
	110	35
5365-01-589-1836	110	18
	110	30
4010-01-589-1837	130	26
5365-01-589-1841	109	42
5365-01-589-1844	136	23

STOCK NUMBER	FIG.	ITEM
5330-01-589-1851	119	5
5340-01-589-1856	119	59
5340-01-589-1859	119	50
5340-01-589-1865	121	11
5340-01-589-1868	28	25
5340-01-589-1875	28	27
5315-01-589-1953	130	23
5340-01-589-2078	133	39
5340-01-589-2181	133	57
2540-01-589-2194	130	41
2540-01-589-2298	140	15
5340-01-589-2307	133	38
2590-01-589-2327	127	91
5340-01-589-2395	130	25
3020-01-589-2402	43	1
	44	1
5340-01-589-2419	119	23
5342-01-589-2654	133	59
5342-01-589-2658	133	53
2590-01-589-3676	110	36
2540-01-589-3884	154	11
2540-01-589-3889	138	61
5340-01-589-4113	110	33
3040-01-589-4127	140	29
[redacted]	[redacted]	[redacted]
[redacted]	[redacted]	[redacted]
[redacted]	[redacted]	[redacted]
[redacted]	[redacted]	[redacted]
5995-01-589-4335	272	27
2590-01-589-4338	130	8
4330-01-589-4662	154	78
4720-01-589-4781	133	105
5340-01-589-4799	138	17

STOCK NUMBER	FIG.	ITEM
5340-01-589-5148	119	11
3020-01-589-6739	43	2
	44	2
[redacted]	[redacted]	[redacted]
[redacted]	[redacted]	[redacted]
[redacted]	[redacted]	[redacted]
[redacted]	[redacted]	[redacted]
[redacted]	[redacted]	[redacted]
[redacted]	[redacted]	[redacted]
[redacted]	[redacted]	[redacted]
2590-01-589-8223	109	39
2590-01-589-8227	2	38
5315-01-589-8345	133	45
5340-01-589-9601	119	20
5330-01-589-9637	119	8
5330-01-589-9638	119	19
5305-01-589-9834	271	41
5340-01-590-0080	119	4
5340-01-590-0339	188	12
3040-01-590-1587	138	35
[redacted]	[redacted]	[redacted]
[redacted]	[redacted]	[redacted]
[redacted]	[redacted]	[redacted]
[redacted]	[redacted]	[redacted]
[redacted]	[redacted]	[redacted]
[redacted]	[redacted]	[redacted]
[redacted]	[redacted]	[redacted]
[redacted]	[redacted]	[redacted]
[redacted]	[redacted]	[redacted]
[redacted]	[redacted]	[redacted]
[redacted]	[redacted]	[redacted]
[redacted]	[redacted]	[redacted]

STOCK NUMBER	FIG.	ITEM
[redacted]	[redacted]	[redacted]
5340-01-590-2223	270	39
	274	49
[redacted]	[redacted]	[redacted]
[redacted]	[redacted]	[redacted]
[redacted]	[redacted]	[redacted]
[redacted]	[redacted]	[redacted]
[redacted]	[redacted]	[redacted]
[redacted]	[redacted]	[redacted]
[redacted]	[redacted]	[redacted]
[redacted]	[redacted]	[redacted]
[redacted]	[redacted]	[redacted]
[redacted]	[redacted]	[redacted]
[redacted]	[redacted]	[redacted]
[redacted]	[redacted]	[redacted]
5365-01-590-3982	46	9
	51	9
[redacted]	[redacted]	[redacted]
	[redacted]	[redacted]
[redacted]	[redacted]	[redacted]
	[redacted]	[redacted]
5315-01-590-7489	202	1
4010-01-590-7625	179	49
5365-01-590-7685	179	32
5365-01-590-7689	179	36
5365-01-590-7692	179	27
5340-01-590-7702	202	7
4910-01-591-5504	305	33
2540-01-591-7135	202	11
5805-01-591-9698	300	43
5120-01-592-1364	110	4
5340-01-592-1687	138	6
3130-01-592-1696	138	59
2540-01-592-1704	138	39
5340-01-592-2000	138	53
5995-01-592-4174	272	30
	278	9
2540-01-592-6966	138	13
3040-01-592-8201	132	68
	133	85
5995-01-592-8450	272	79
	278	49
5305-01-592-8499	202	10
5995-01-593-2915	272	73
	278	69
5995-01-593-2997	272	35
	278	26
5995-01-593-3024	272	78
	278	59
5995-01-593-3073	272	72
	278	74
[redacted]	[redacted]	[redacted]
5995-01-593-5459	272	40
	278	33
5995-01-593-5479	272	52
	278	37
5995-01-593-5500	272	38
	278	29
5995-01-593-5522	272	50
	278	48
[redacted]	[redacted]	[redacted]
	[redacted]	[redacted]
[redacted]	[redacted]	[redacted]
5995-01-593-5830	278	28
5995-01-593-6030	272	36
	278	27

STOCK NUMBER	FIG.	ITEM
5305-01-593-8750	175	1
7045-01-593-9084	328	1
5305-01-593-9649	202	8
2510-01-593-9652	179	19
5310-01-593-9654	179	47
9535-01-593-9658	179	16
5340-01-593-9664	179	23
5340-01-593-9666	202	5
5340-01-593-9668	179	25
5340-01-593-9669	202	15
5340-01-593-9670	202	9
5340-01-593-9672	179	20
5365-01-593-9675	179	30
5365-01-593-9678	179	28
5365-01-593-9679	179	37
5995-01-594-2054	328	6
6150-01-594-2088	328	7
7025-01-594-2101	328	5
5315-01-595-3905	179	51
[redacted]	[redacted]	[redacted]
[redacted]	[redacted]	[redacted]
2590-01-595-6682	179	29
2590-01-595-6690	179	33
2590-01-595-6729	179	31
2540-01-595-6736	179	43
2540-01-595-6743	179	43
2540-01-595-6752	200	17
2590-01-595-6757	179	35
5340-01-595-9939	119	9
[redacted]	[redacted]	[redacted]
5310-01-596-1236	179	42
5310-01-596-1255	179	41
9535-01-596-4902	184	37

STOCK NUMBER	FIG.	ITEM
9535-01-596-4906	184	4
5340-01-596-5063	188	13
1290-01-596-7196	257	17
5340-01-596-7496	188	7
2910-01-596-7572	119	25
5305-01-597-4966	49	6
5310-01-598-0735	127	112
9535-01-598-1372	179	26
9535-01-598-1375	179	17
5340-01-598-1384	179	38
2530-01-598-1725	KITS	31
2530-01-598-1727	KITS	33
2530-01-598-1728	KITS	32
6110-01-598-1820	127	106
2520-01-598-2608	83	9
[redacted]	[redacted]	[redacted]
	[redacted]	[redacted]5
1005-01-598-4401	270	20
	274	22
5340-01-598-4542	127	114
5120-01-598-4754	305	46
5310-01-598-5151	127	104
5935-01-598-5965	141	23
[redacted]	[redacted]	[redacted]
	[redacted]	[redacted]
[redacted]	[redacted]	[redacted]
	[redacted]	[redacted]
6110-01-598-7684	99	5
	[redacted]	[redacted]
5895-01-598-7687	271	10
	275	6
5895-01-598-7688	270	28
	274	30

STOCK NUMBER	FIG.	ITEM
5305-01-598-9006	127	115
5340-01-599-3892	127	107
5306-01-599-7425	43	12
	44	12
5340-01-600-2136	127	110
9535-01-600-2855	179	18
6150-01-600-9397	100	46
6150-01-600-9454	100	84
	100	85
	108	69
6150-01-600-9646	100	66
5995-01-601-0782	100	83
	108	68
4520-01-601-2709	154	34
5310-01-601-2862	157	25
5340-01-601-2863	59	88
5305-01-601-2864	127	103
5340-01-601-2865	146	35
2510-01-601-7463	130	28
5330-01-601-7840	73	50
	86	2
5340-01-601-7841	154	36
5340-01-601-7855	30	16
5340-01-601-7863	130	22
8140-01-601-7898	2	36
5340-01-601-7902	2	35
5340-01-601-7904	38	111
5340-01-601-7909	40	23
5340-01-601-7917	158	38
	159	38
5340-01-601-7923	158	31
	159	31
7035-01-601-7936	157	1
5340-01-601-7953	157	8
5340-01-601-7960	158	30
	159	21
5340-01-601-7962	158	18
	159	15
7690-01-601-7964	170	6
3110-01-601-7966	2	43
4210-01-601-7968	127	120
5340-01-601-7973	157	22
7690-01-601-7974	158	49
5310-01-601-8001	127	109
5310-01-601-8003	127	111
4730-01-601-8070	57	11
	61	2
4730-01-601-8071	57	53
4720-01-601-8073	154	58
4720-01-601-8076	154	60
9515-01-602-0843	30	43
9515-01-602-0846	30	42
9515-01-602-0848	30	44
9515-01-602-0850	30	33
2590-01-602-0852	55	7
9515-01-602-0853	30	41
9515-01-602-0857	30	30
9515-01-602-0858	30	46
9515-01-602-0860	30	45
2590-01-602-0861	55	7
5360-01-602-2145	38	96
5360-01-602-2146	38	113
5340-01-602-9166	172	53
	173	62
[redacted]	[redacted]	[redacted]
5340-01-603-5157	98	52

STOCK NUMBER	FIG.	ITEM
	106	55
7690-01-603-5647	158	63
7690-01-603-5672	158	61
5975-01-603-5801	173	38
5340-01-603-5943	94	81
	102	43
5340-01-603-6110	94	84
	102	46
5365-01-603-7027	173	50
5340-01-603-7088	173	51
5340-01-603-9382	135	13
	136	4
5340-01-603-9387	135	16
	136	6
6150-01-604-2177	109	14
	110	14
6150-01-604-2180	110	13
6150-01-604-2184	109	41
6150-01-604-2186	109	15
5340-01-604-2215	119	24
3940-01-604-5037	318	3
2590-01-604-9189	201	7
2540-01-604-9318	197	6
	198	8
5340-01-604-9337	140	25
5330-01-604-9349	KITS	15
5340-01-604-9350	133	96
2510-01-605-1642	198	6
5340-01-605-1669	109	42
5340-01-605-1674	119	18
5340-01-605-1683	119	12
5340-01-605-1688	133	91
8140-01-605-1689	158	64
	159	47
5995-01-605-3122	300	64
2590-01-605-3174	140	26
2590-01-605-3175	119	28
2540-01-605-4215	184	76
	185	85
5365-01-605-4257	119	16
5340-01-605-4263	2	28
5340-01-605-4265	2	27
5365-01-605-4269	135	17
4820-01-605-5059	133	94
[redacted]	[redacted]	[redacted]
5315-01-605-7499	138	54
5305-01-605-7728	138	32
5305-01-605-8053	138	36
5310-01-605-8116	138	56
5307-01-605-9861	179	34
[redacted]	[redacted]	[redacted]
5310-01-606-2456	138	19
5305-01-606-2782	99	31
	107	21
4730-01-606-2854	133	92
3040-01-606-3102	136	1
5340-01-606-5345	138	34
6160-01-606-6621	2	39
6365-01-606-6645	138	9
5340-01-606-6775	173	1
6220-01-606-8142	94	58
6220-01-606-8145	94	74
4730-01-606-9469	15	23
	16	5
5305-01-607-8222	121	1
[redacted]	[redacted]	[redacted]

STOCK NUMBER	FIG.	ITEM
[redacted]	[redacted]	[redacted]
4730-01-607-9035	117	30
	119	45
5340-01-607-9629	95	37
	103	37
	109	56
7025-01-609-5767	174	7
	175	4
5999-01-609-7161	172	45
	282	14
2540-01-609-8432	KITS	34
5340-01-612-3596	[redacted]	[redacted]
	[redacted]	[redacted]
5340-01-612-7433	235	41
6150-01-612-7847	272	77
	278	60
[redacted]	[redacted]	[redacted]
	[redacted]	[redacted]
5305-01-613-0244	270	44
	274	53
6105-01-613-1422	220	3
[redacted]	[redacted]	[redacted]
3110-01-613-2056	223	11
[redacted]	[redacted]	[redacted]
[redacted]	[redacted]	[redacted]
3020-01-613-3686	253	1
[redacted]	[redacted]	[redacted]
2540-01-615-4572	179	44
5935-01-616-2726	272	75
	278	75
4010-01-616-4452	202	12
5999-01-616-5358	185	95
	[redacted]	[redacted]

STOCK NUMBER	FIG.	ITEM
2510-01-616-8980	179	44
5310-01-617-7416	174	10
5935-01-618-0362	268	28
5998-01-619-6960	65	19
9330-01-620-0350	175	6
2910-01-620-2142	119	1
5305-01-620-3801	60	20
5340-01-620-6230	300	50
[redacted]	[redacted]	[redacted]
[redacted]	[redacted]	[redacted]
5340-01-620-8396	300	36
[redacted]	[redacted]	[redacted]
5340-01-620-8398	300	44
[redacted]	[redacted]	[redacted]
5975-01-620-9922	300	41
5305-01-621-1078	300	4
5340-01-621-1184	300	8
1240-01-621-1641	233	20
3110-01-621-2830	238	82
1240-01-621-3930	233	12
5315-01-621-5668	300	46
5310-01-621-6486	187	38
5995-01-621-8136	272	26
5340-01-622-3018	299	2
5340-01-622-3110	300	52
5995-01-622-5096	272	39
	278	30
5310-01-622-5292	282	16
7021-01-622-8908	172	3
5340-01-622-9250	174	3
5985-01-622-9789	300	37
3120-01-623-0711	52	11
3120-01-623-0857	52	9

STOCK NUMBER	FIG.	ITEM
5340-01-623-0901	52	8
3110-01-623-1254	238	55
2530-01-623-2347	52	25
2510-01-623-2537	44	35
5340-01-623-3966	174	9
7025-01-623-5349	172	43
5340-01-623-7365	95	45
	103	44
	109	64
2510-01-623-8838	44	34
4210-01-623-9017	127	105
2510-01-623-9111	44	33
2510-01-623-9502	44	47
2530-01-624-3035	52	25
2530-01-624-3074	172	37
2530-01-624-3100	172	36
7025-01-624-3792	172	4
2540-01-624-5291	44	28
5305-01-625-6832	300	31
5340-01-626-9197	174	4
3040-01-627-0871	177	5
5995-01-627-2435	278	73
	[redacted]	[redacted]
5340-01-627-4718	126	38
2520-01-627-6468	144	5
[redacted]	[redacted]	[redacted]
5998-01-630-7410	328	11
5998-01-630-7489	328	11
5998-01-630-7490	328	11
7045-01-630-7495	328	12
5998-01-630-8007	328	11
5998-01-630-8124	328	11
6150-01-631-6134	100	42

STOCK NUMBER	FIG.	ITEM
	108	40
[redacted]	[redacted]	[redacted]
	[redacted]	[redacted]
5995-01-631-8063	278	17
1290-01-632-0814	270	22
	274	35
[redacted]	[redacted]	[redacted]
	[redacted]	[redacted]
[redacted]	[redacted]	[redacted]
[redacted]	[redacted]	[redacted]
[redacted]	[redacted]	[redacted]
5995-01-642-5337	108	71
	[redacted]	[redacted]
5315-01-643-5409	133	56
2910-01-644-0410	65	23
4730-01-645-3318	130	4
2590-01-645-3332	130	9
5340-01-645-3611	172	41
5340-01-645-3614	172	12
5340-01-645-3615	172	5
5340-01-645-3617	172	32
5340-01-645-3618	172	62
5340-01-645-3620	172	73
5340-01-645-3621	172	46
5340-01-645-3623	172	15
5342-01-645-3624	172	55
5340-01-645-3626	172	35
5342-01-645-3627	172	54
5340-01-645-3631	172	34
5340-01-645-3632	172	67
5340-01-645-3633	172	49
5342-01-645-3634	172	16
5342-01-645-3635	172	26

STOCK NUMBER	FIG.	ITEM
5365-01-645-3636	172	6
5340-01-645-3639	172	61
5340-01-645-3642	172	75
5975-01-645-3645	157	15
5340-01-645-3647	172	79
5340-01-645-4953	130	12
5310-01-645-4956	170	25
5310-01-645-4959	170	26
5975-01-645-6734	159	26
[redacted]	[redacted]	[redacted]
[redacted]	[redacted]	[redacted]
[redacted]	[redacted]	[redacted]
[redacted]	[redacted]	[redacted]
5340-01-645-8439	100	73
5310-01-645-8719	172	69
5995-01-645-8735	100	79
5995-01-645-8738	100	78
5995-01-645-8757	100	81
	261	15
5995-01-645-8758	100	80
5330-01-645-8865	172	68
5340-01-645-9650	100	69
[redacted]	[redacted]	[redacted]
[redacted]	[redacted]	[redacted]
[redacted]	[redacted]	[redacted]
5340-01-646-0484	194	12
5995-01-646-0518	100	82
5995-01-646-0933	172	10
5995-01-646-1042	272	25
5340-01-648-5611	65	8
[redacted]	[redacted]	[redacted]
5340-01-650-3356	233	21
2520-01-655-6035	62	276
	65	35
5340-01-656-0574	172	21
5340-01-656-2080	300	38
5315-01-657-6610	132	38
	133	24
6140-01-662-7350	109	23
[redacted]	[redacted]	[redacted]
6220-02-554-8311	94	64
5305-12-356-5606	131	9
5999-20-006-4391	175	3
5340-20-006-8067	175	2

0332-147/148 blank

BEREGINI BEREGINI BEREGINI

MAINTAINER

PART NUMBER INDEX

PART NUMBER	FIG.	ITEM
A-A-52425-1	95	27
	103	27
	109	16
	110	12
A-A-52506-F-06	57	27
	117	28
	119	36
A-A-52506-F-12	57	19
	162	24
	210	27
A-A-52506-F-20	117	28
	118	52
	141	52
	162	1
A-A-52506-F-24	81	2
	141	10
	154	7
	191	7
A-A-52506-F-36	119	49
A-A-52506-F-48	57	63
	117	19
	138	33
	154	12
A-A-52525-21	102	83
A-A-55077	176	8
A-A-55126	BULK	2
A-A-55524/2-007	95	36
	103	36
	109	55
A-A-59432-08	90	19
A-A-59559-1	94	38
	102	38
A-A-59602-2B	BULK	48
A-A-59616ACABCA	142	31
	143	32
A28642	96	28
	104	28
A3013367-1	99	53
	107	53
A3014031-12	100	76
	108	50
A3014031-8	100	75
	108	49
A3206126	107	56
A3257491	173	9
A3308538	172	37
A3308578	172	36
A3312449-7	300	63
A3312450-3	300	67
A3312451-5	300	70
[redacted]	[redacted]	[redacted]
	[redacted]	[redacted]
A52482-1	129	20
A52499-11	95	4
	103	4
A52499-5	95	5
	103	5
A52499-7	97	19
	105	13
AA-52425-2	95	29
	103	29
	109	11

PART NUMBER	FIG.	ITEM
	110	10
	[redacted]	[redacted]
	[redacted]	[redacted]
AA-59616BDQBDBA	305	19
AA-9500-D822	65	3
AA52463-A08	116	7
AA52463-A09	111	10
	114	7
	116	9
	280	7
AA52463-B06	94	22
	102	22
AA52463-B10	111	9
	116	8
AA52463-B11	114	3
	280	3
AA52506-F-016	162	50
	210	3
AA52506-F-104	55	19
	81	28
	117	71
	146	41
AA52506-F-36	141	31
	146	24
	154	13
AA52506-F-72	117	71
	154	19
	155	7
AA52506-SLHD-212	57	11
	61	2
AA52506-SLTB-74	57	53
AA52536-1	281	4
AA52536-2	111	6

PART NUMBER	FIG.	ITEM
	116	6
AA55571/08-002	95	49
	103	48
	109	68
AA59440/1-004	62	118
AA59558-107	127	59
AA59569R36T0500	241	20
AA59583-400JEBE	243	22
AA59583-412JABT	73	44
AA59583-412JDBT	73	27
AA59584-106JABT	73	6
AA59616ACAAAC	73	72
AA59616ACBBCG	13	2
AA59649-417	53	7
ABM2S-A	173	36
AEB02C250625WA6AA1	18	9
	25	83
	27	4
	28	4
	39	36
	40	10
	94	83
	95	46
	96	17
	99	17
	102	45
	103	45
	104	17
	107	18
	109	65
	110	54
	110	62
	127	89

PART NUMBER	FIG.	ITEM
	138	8
	144	11
	157	32
	171	6
	184	7
	185	7
	191	1
	223	13
	227	7
[redacted]	[redacted]	[redacted]
	270	33
	274	37
[redacted]	[redacted]	[redacted]
[redacted]	[redacted]	[redacted]
AEB02C250A00AW9A96	235	18
	237	7
	238	30
	255	20
AEB02C250A25AW9A96	236	2
AEB02C250B00AW9A96	235	42
	238	13
	257	16
AEB02C250B25AW9A96	238	15
AEB02C250C25AW9A96	238	64
AEB02C312875AW9A91	38	109
	99	1
	107	1
	127	101
	200	20
[redacted]	[redacted]	[redacted]
[redacted]	[redacted]	[redacted]
AEB02C312A00AW9A81	38	30
	268	12

PART NUMBER	FIG.	ITEM
	271	50
	275	52
	276	13
AEB02C312A25AW9A91	127	54
	127	119
	138	21
	200	15
	233	10
[redacted]	[redacted]	[redacted]
[redacted]	[redacted]	[redacted]
AEB02C375875AW9A96	100	28
	108	26
	109	1
AEB02C375A00AW9A96	235	71
AEB02C375A25AW9A96	27	42
	28	48
AEB02C375A50AW9A96	234	8
	236	25
	254	5
AEB02C375A75AW9096	135	4
AEB02C500A25AW9A96	30	6
AEB02F500750AW9A96	238	57
AEN02C500000AZ4A11	109	32
AES01C250378AW9A91	98	58
	99	36
	106	66
	107	36
	179	52
	261	14
	268	31
	272	64
	326	16
AES01C250500AW9A91	15	50

PART NUMBER	FIG.	ITEM
	21	13
	106	66
	162	40
	172	24
	191	12
	201	10
	213	11
	227	22
	228	2
	232	1
	242	5
	[redacted]	[redacted]
	[redacted]	[redacted]
	270	7
	271	1
	272	53
	274	1
	275	1
	276	8
	[redacted]	[redacted]
	278	51
	282	11
	[redacted]	[redacted]
AES01C250562AW9A91	155	29
	158	3
	159	3
	282	15
AES01C250750AW9A91	15	43
	28	35
	38	23
	57	34
	57	88
	65	17

PART NUMBER	FIG.	ITEM
	65	32
	68	6
	69	5
	70	7
	73	20
	82	3
	86	4
	90	12
	93	18
	99	41
	106	48
	107	41
	127	90
	129	21
	132	8
	133	12
	138	40
	141	33
	146	6
	161	12
	162	7
	170	23
	171	1
	173	10
	190	2
	190	2
	193	39
	194	42
	202	2
	205	10
	208	12
	209	12
	210	20

PART NUMBER	FIG.	ITEM
	221	5
	232	13
	235	38
	257	22
	[redacted]	[redacted]
	[redacted]	[redacted]
	[redacted]	[redacted]
	270	12
	271	19
	274	16
	275	20
	[redacted]	[redacted]
	[redacted]	[redacted]
	300	45
AES01C250A12AW9A91	29	16
	117	75
	130	21
	172	44
	184	66
	185	76
	211	20
	243	32
	[redacted]	[redacted]
	[redacted]	[redacted]
	270	29
	274	31
	[redacted]	[redacted]
	278	54
	300	45
	[redacted]	[redacted]
AES01C250A37AW9A91	155	12
	193	2
	194	2
	209	22
	243	21
	[redacted]	[redacted]
	271	69
	275	71
	300	26
AES01C312A50AW9A91	138	5
	200	15
	[redacted]	[redacted]
AES01C375500AW9A91	38	1
AES01C375625AW9A91	32	5
	33	19
	38	133
	39	39
	40	41
	94	71
	95	79
	96	52
	103	80
	104	53
	110	40
	170	17
	178	8
	179	3
	185	86
	232	6
AES01C375750AW9A91	2	7
	25	107
	27	29
	28	28
	29	50
	38	49
	39	26

PART NUMBER	FIG.	ITEM
	40	59
	52	6
	94	5
	102	5
	120	5
	121	9
	126	60
	141	44
	146	11
	154	1
	158	17
	159	18
	170	5
	178	7
	179	2
	181	41
	184	10
	185	12
	212	7
	[redacted]	[redacted]
	[redacted]	[redacted]
	[redacted]	[redacted]
	[redacted]	[redacted]
	300	60
AES01C375A12AW9A91	21	9
	27	19
	28	20
	38	135
	82	7
	94	56
	102	54
	117	51
	118	6
	119	56
	126	40
	140	23
	154	51
	185	91
	187	13
	188	16
	190	41
	204	3
	233	7
	257	21
	261	27
	[redacted]	[redacted]
	[redacted]	[redacted]
	272	70
	278	53
	[redacted]	[redacted]
	[redacted]	[redacted]
AES01C375A12AW9A96	135	18
	136	13
AES01C375A12AW9A9B	177	4
	193	9
AES01C375A25AW9A91	12	1
	25	157
	35	1
	38	118
	39	53
	41	5
	57	57
	60	22
	61	27
	81	40
	93	26

PART NUMBER	FIG.	ITEM
	95	17
	98	31
	106	31
	109	6
	117	42
	119	69
	126	48
	136	18
	139	22
	141	43
	146	15
	154	18
	166	6
	168	3
	173	49
	220	1
	223	7
	[redacted]	[redacted]
	[redacted]	[redacted]
	[redacted]	[redacted]
	270	6
	270	43
	[redacted]	[redacted]
	300	11
AES01C375A25AW9A97	25	90
AES01C375A25AZ0A86	2	17
	22	1
	29	47
	31	24
	40	92
	103	17
	130	5
	132	15

PART NUMBER	FIG.	ITEM
	133	55
	179	22
	181	31
	182	6
	184	74
	185	109
	188	3
	189	3
	197	2
	198	2
	199	27
	227	16
	[redacted]	[redacted]
AES01C375A37AW9A91	25	70
	129	42
	137	21
	173	15
	184	41
	185	49
	190	31
	200	28
	224	21
	227	35
	[redacted]	[redacted]
	[redacted]	[redacted]
	[redacted]	[redacted]
	300	15
AES01C375A50AW9A91	25	9
	30	4
	39	29
	40	6
	41	15
	46	1

PART NUMBER	FIG.	ITEM
	51	1
	52	24
	53	1
	58	18
	83	3
	118	29
	119	72
	126	61
	127	13
	129	4
	130	14
	136	12
	146	13
	154	44
	161	21
	172	58
	173	48
	179	24
	182	51
	185	97
	188	6
	194	13
	211	11
	224	1
	243	3
	[redacted]	[redacted]
	[redacted]	[redacted]
	[redacted]	[redacted]
	[redacted]	[redacted]
	[redacted]	[redacted]
	296	17
	300	5
	[redacted]	[redacted]

PART NUMBER	FIG.	ITEM
	320	5
AES01C375A75AW9A91	25	94
	29	11
	30	28
	38	89
	57	108
	121	12
	123	15
	130	10
	141	47
	185	72
	189	15
	197	10
	198	5
	224	7
	257	40
	[redacted]	[redacted]
	[redacted]	[redacted]
	[redacted]	[redacted]
	[redacted]	[redacted]
	296	7
	[redacted]	[redacted]
AES01C375B00AW9A91	25	100
	65	20
	83	8
	92	5
	94	11
	102	11
	109	25
	135	12
	136	9
	146	46
	154	37

PART NUMBER	FIG.	ITEM
	172	77
	173	43
	194	11
	223	8
	233	18
	[redacted]	[redacted]
	300	27
AES01C375B25AW9A91	60	3
	154	53
	172	63
	184	56
	185	63
	212	8
	[redacted]	[redacted]
	300	7
	[redacted]	[redacted]
AES01C375B50AW9A91	29	78
	34	11
	38	40
AES01C375B75AW9A91	62	55
AES01C375C25AW9A91	30	25
	211	10
AES01C375C50AW9A91	29	85
	161	24
AES01C375C75AW9A91	19	1
	188	8
AES01C375E00AW9A91	92	7
AES01C438A25AW9A91	62	29
	138	14
AES01C438A25AW9A97	61	26
AES01C438B25AW9A97	60	70
AES01C438D75AW9A97	59	2
	60	17

PART NUMBER	FIG.	ITEM
	61	38
	126	51
AES01C500A37AW9A91	20	10
	222	7
	[redacted]	[redacted]
AES01C500A50AW9A91	25	140
	38	74
	39	16
	41	19
	57	95
	184	64
	[redacted]	[redacted]
	[redacted]	[redacted]
AES01C500A50WA6AAZ	31	15
	132	27
	133	28
	173	28
	261	35
	[redacted]	[redacted]
AES01C500B50AW9A91	31	8
	57	25
	58	30
	181	24
	184	38
	185	46
	206	9
	[redacted]	[redacted]
	290	7
	[redacted]	[redacted]
	[redacted]	[redacted]
AES01C500C25AW9A91	29	68
	157	23
	158	45

PART NUMBER	FIG.	ITEM
	159	44
	162	53
	184	91
	185	107
	193	31
	194	34
AES01C500C50AW9A91	20	23
	184	101
	185	118
	193	38
	194	41
	320	4
AES01C500D25AW9A91	20	37
AES01C500D50AW9A91	157	31
	172	76
AES01C500E50AW9A91	40	13
AES01C625A25AW9A91	60	49
AES01C625A75WA6AA1	29	41
	30	32
	39	7
	42	14
	43	14
	44	14
	253	3
AES01C625B50AW9A91	25	15
	58	24
	185	10
	261	28
AES01C625B75AW9A91	29	20
	43	50
	44	48
AES01C625C00AW9A91	18	16
	25	13

PART NUMBER	FIG.	ITEM
	43	8
	44	8
	209	16
	320	7
AES01C625C37AW9A91	25	21
	42	37
AES01C625D25AW9A91	31	48
	43	23
	44	23
AES01C625D75AW9A91	43	51
	44	49
AES01C625E00AW9A91	29	32
	43	9
	44	9
AES01C750A25AW9A91	30	37
	182	35
AES01C750A75AW9A91	38	46
	184	95
	185	112
AES01C750B25AW9A91	15	20
	17	3
	31	11
	40	1
AES01C750B50AW9A91	31	26
	31	26
	39	85
	42	45
	43	19
	44	19
	184	3
	185	17
	300	53
AES01C750C00AW9A91	29	6

PART NUMBER	FIG.	ITEM
	184	35
	185	45
AES01C750C25AW9A91	37	2
AES01C750E00AW9A91	146	48
AES01CA00C00AW9A91	2	32
AES01CA00C25AW9A91	29	29
AES01CA00D50AW9A91	36	2
AES01F250625AW9A97	73	43
AES01F250A12AW9A91	59	85
AES01F312A00AW9A91	99	49
	107	50
AES01F375C50AW9A91	126	16
	224	9
AES01F438A25AW9A92	131	18
AES01F500A37AW9A91	55	31
AES01F500B75AW9A91	57	2
AES01F625A25AW9A91	49	9
AES01F625C25AW9A91	57	43
AES02C500B00AW9A81	20	5
	25	31
	55	20
	127	24
	132	58
	133	75
	158	27
	159	24
	165	1
	173	21
	178	17
	179	12
	181	15
	184	22
	185	22

PART NUMBER	FIG.	ITEM
	190	18
	222	6
	224	13
	253	5
	296	23
	326	7
AES07M508020DF1A11	127	103
AES18C375A00DG5A91	171	15
AESF5F250500AW9DG3	121	1
AEW16M60M000GE1AA1	94	79
AEW20M50M000DC7A11	127	104
AEW24X164000EA1A91	[redacted]	[redacted]
	300	2
	[redacted]	[redacted]
[redacted]	[redacted]	[redacted]
AEW24X25N000BD6A91	187	37
AEW24X25N000EA1A91	158	32
	159	32
AEW24X31N000EA1A91	157	25
AEW24X37N000BD6A91	158	37
	159	37
AG7756-E0	38	122
AK-6018-20SS	62	238
AK0401800SS	62	318
AK100220SS	62	141
AM12-019	78	6
AMS-QQ-A-250/2	BULK	46
AN174-11A	243	5
AN174-17A	243	15
AN310-20	15	19
AN310-6	127	77
AN310-8	73	62
	86	17

PART NUMBER	FIG.	ITEM
AN310C8	225	10
AN365-1024A	118	44
AN3H14A	147	9
AN565DC4H3	241	3
AN6230-B7	42	34
	43	36
	44	36
	57	100
AN6235-2A	134	61
AN818-4D	127	11
AN901-8C	60	78
AN912-1J	60	13
AN960-1016L	132	49
AN960-1416L	25	2
AN960-1616	38	53
	123	33
AN960-616L	137	27
	146	56
	161	18
AN960-816	57	97
	123	43
	129	66
	132	29
AN960C1416L	125	2
AN960XC416L	226	20
AN970-6	98	26
	106	25
AN970-8	57	1
	132	73
	133	111
AR0963300	62	86
AR12190	62	104
AR45632	62	93
AR45633	62	94
ARMR220	175	6
AS0602140SL	62	236
AS0802620SL	62	248
AS15001-1	232	14
AS15001-1P	15	23
	16	5
AS15003-1	50	2
	96	24
	104	24
AS21919WCF21	118	68
	119	41
[redacted]	[redacted]	[redacted]
	[redacted]	[redacted]
AS21919WDG04	25	136
	59	61
	60	64
	95	8
	96	12
	100	36
	103	8
	104	12
	108	33
	127	38
AS21919WDG05	94	44
	98	14
	99	46
	100	18
	102	73
	106	14
	107	46
	107	47
	108	19

PART NUMBER	FIG.	ITEM
AS21919WDG08	94	50
	96	10
	98	15
	99	34
	100	32
	102	74
	104	10
	106	15
	107	20
	108	30
AS21919WDG10	59	52
AS21919WDG11	100	24
	108	25
	190	34
AS21919WDG12	60	1
	95	24
	96	49
	98	12
	99	39
	100	34
	103	25
	104	49
	106	12
	107	39
	108	34
	109	44
AS21919WDG13	95	25
	103	24
AS21919WDG14	60	7
	97	36
	100	17
	105	41
	108	16
AS21919WDG15	60	18
AS21919WDG16	57	48
	59	21
	60	8
	95	51
	97	14
	100	27
	103	31
	105	26
	108	17
	109	47
AS21919WDG20	61	17
	96	11
	100	6
	104	11
	108	6
AS21919WDG24	25	117
	59	30
	141	22
	162	49
	210	14
	210	30
AS21919WDG25	95	33
	103	34
	109	50
	162	3
AS21919WDG3	96	47
	97	10
	99	32
	104	47
	105	20
	107	22
AS21919WDG32	57	75

PART NUMBER	FIG.	ITEM
	268	8
	276	9
AS21919WDG34	146	28
AS21919WDG36	268	10
	272	34
	276	11
	278	15
AS21919WDG9	97	28
	98	16
	100	25
	105	22
	108	18
AS24586-603	129	25
AS3209-037	73	82
	86	47
AS3209-127	65	18
AS3209-275	73	45
AS3367-3-0	108	70
AS33671-4-9	226	17
AS3551-010	47	5
	54	2
AS3581-014	65	6
	71	4
AS3581-908	65	5
	71	3
AS3581-910	68	2
	72	2
AS39029/58-363	235	79
	235	99
	237	33
	256	2
AS4854J01	128	2
AS4854J06	57	16
AS4855D08	162	62
AS4857-04	117	30
	118	66
AS4857W04	117	30
	119	45
AS4863D02	57	98
AS5168-12	61	35
AS5172D0608L	127	3
AS5178D06	127	7
AS5183-1612	57	15
AS5355/3-22B	82	14
AS5406D06	127	5
AXK1528	172	70
B1821AH075F175N	42	11
	43	11
	44	11
B1821BH025C063D	226	15
B1821BH025C088D	226	25
B1821BH025C088N	27	17
	28	17
	61	32
	65	26
	70	1
	98	29
	106	28
	118	49
	127	63
	133	3
	146	6
	162	39
	172	22
	187	36
	226	10

PART NUMBER	FIG.	ITEM
	257	10
	[redacted]	[redacted]
	[redacted]	[redacted]
	271	9
	274	4
	275	5
	[redacted]	[redacted]
	[redacted]	[redacted]
	[redacted]	[redacted]
	[redacted]	[redacted]
	315	3
B1821BH025C100N	12	4
	25	74
	27	11
	28	11
	57	101
	59	26
	65	33
	94	51
	95	75
	102	53
	103	76
	106	63
	126	33
	127	80
	129	23
	133	97
	154	63
	155	14
	162	43
	173	6
	178	2
	179	14
	183	9
	190	7
	197	4
	198	4
	210	24
	227	21
	232	9
	243	27
	257	25
	[redacted]	[redacted]
	[redacted]	[redacted]
	268	5
	[redacted]	[redacted]
	276	5
	[redacted]	[redacted]
	300	20
	[redacted]	[redacted]
B1821BH025C125N	39	18
	40	45
	94	72
	98	56
	99	9
	106	59
	107	11
	107	26
	133	50
	172	50
	257	4
	[redacted]	[redacted]
	268	2
	274	11
	276	2
	300	25

PART NUMBER	FIG.	ITEM
	[redacted]	[redacted]
B1821BH025C150N	123	4
	129	16
	261	17
	268	32
	300	40
	[redacted]	[redacted]
B1821BH025C175N	15	51
	58	40
	138	52
	191	20
	300	42
B1821BH025C200N	133	58
	172	7
	300	39
B1821BH025C225N	155	13
	236	1
B1821BH025C250N	172	13
B1821BH025C300N	94	30
	102	29
	271	27
	275	31
B1821BH025F038N	139	3
	140	3
B1821BH025F050N	119	26
	232	22
	271	35
	275	38
B1821BH025F063N	96	36
	104	36
B1821BH025F075N	98	4
	106	4
	119	2

PART NUMBER	FIG.	ITEM
B1821BH025F100N	81	6
	98	19
	106	17
	117	5
	118	12
	126	4
B1821BH025F200N	73	8
B1821BH031C075N	113	10
	[redacted]	[redacted]
	[redacted]	[redacted]
B1821BH031C113N	110	8
B1821BH031C138N	179	40
	274	45
B1821BH031C175N	58	37
	110	5
	126	24
B1821BH031C250N	58	14
B1821BH031C300N	110	2
B1821BH031C450N	73	31
B1821BH031F056N	79	8
	88	2
B1821BH031F075N	139	35
	140	22
B1821BH031F138N	126	17
B1821BH031F150N	126	58
B1821BH031F175N	65	40
	126	13
B1821BH038C088N	25	51
	27	24
	28	30
	38	60
	39	71
	40	69

PART NUMBER	FIG.	ITEM
	57	6
	81	12
	126	43
	146	18
	170	20
	187	27
	188	5
	189	14
	212	4
	218	12
	271	72
	275	74
B1821BH038C100N	2	2
	15	24
	25	96
	27	15
	28	15
	29	75
	38	66
	39	48
	40	20
	41	7
	60	41
	61	15
	62	19
	82	1
	93	3
	93	25
	94	19
	99	23
	102	19
	107	12
	117	56
	123	18
	129	7
	132	43
	133	30
	141	1
	146	44
	154	25
	170	16
	177	8
	178	5
	179	13
	181	57
	182	33
	184	33
	185	34
	186	13
	187	8
	189	7
	190	48
	207	3
	218	7
	224	6
	227	24
	233	4
	[redacted]	[redacted]
	271	6
	275	9
	[redacted]	[redacted]
B1821BH038C225L	181	26
B1821BH038C300L	181	12
	193	18
	194	21
B1821BH038C300N	58	7

PART NUMBER	FIG.	ITEM
	65	10
	173	60
B1821BH038C325L	193	10
	194	23
B1821BH038C400N	57	81
	146	21
B1821BH038C425N	92	6
	161	14
B1821BH038C600N	138	15
B1821BH038F100N	127	97
	206	4
	228	18
	232	17
B1821BH038F113N	227	42
B1821BH038F125N	38	132
	84	15
B1821BH038F150N	135	9
B1821BH038F250N	129	50
B1821BH038F300N	227	26
B1821BH038F400N	224	11
B1821BH044C100N	138	44
B1821BH044C150D	58	22
B1821BH044C175N	138	28
B1821BH050C113N	25	30
	29	2
	53	26
	94	13
	102	13
	184	53
	185	58
B1821BH050C125N	25	45
	34	10
	58	19
	93	6
	109	34
	118	20
	119	51
	130	37
	184	52
	185	59
	[redacted]	[redacted]
B1821BH050C175N	20	4
	20	4
	23	5
	25	39
	31	6
	38	7
	41	21
	57	32
	132	32
	133	32
	158	5
	159	5
	182	43
	184	27
	184	27
	185	27
	185	27
	[redacted]	[redacted]
	[redacted]	[redacted]
B1821BH050C225N	20	32
	25	48
	31	14
	41	2
	58	51
	62	306

PART NUMBER	FIG.	ITEM
	132	63
	133	80
	157	4
	158	12
	159	12
	177	3
	184	82
	185	68
B1821BH050C275N	25	33
	30	7
	39	1
	184	16
	185	33
	193	32
	194	35
	[redacted]	[redacted]
B1821BH050C300N	20	9
	98	42
	106	42
	184	105
	185	16
	261	33
	296	3
B1821BH050C375N	130	29
B1821BH050C400N	130	36
B1821BH050C600N	38	56
B1821BH050F125N	57	51
B1821BH050F150N	57	68
B1821BH050F225N	57	9
B1821BH050F300N	29	9
	57	86
B1821BH050F350N	23	2
B1821BH063C113N	42	27
	43	39
	44	39
B1821BH063C150N	29	33
	30	36
	189	9
	190	25
B1821BH063C200N	17	6
	25	41
	29	38
	30	18
	34	3
	40	28
	42	8
	55	3
	[redacted]	[redacted]
B1821BH063C225N	25	18
	57	47
	209	17
B1821BH063C325N	25	19
	42	9
	43	52
	44	50
B1821BH063C350N	29	19
B1821BH063C700N	43	49
	44	45
B1821BH063F163N	49	6
B1821BH063F175N	42	12
	227	55
B1821BH075C200N	30	18
	36	4
	38	39
	40	9
B1821BH075C275N	29	4

PART NUMBER	FIG.	ITEM
	31	3
	39	88
	185	3
B1821BH075C350N	31	30
	58	35
	184	8
	185	11
	300	56
B1821BH075C400N	18	4
B1821BH075C450N	29	27
	308	4
B1821BH088C375N	15	13
B1821BH100C200N	2	10
B1822BH060N	94	78
	102	81
B18231B06015L	173	24
B1831BH060025N	94	77
	102	80
B47287-II-1.0	BULK	51
B47287-II-1/4	BULK	52
B47287-II-1/4-S4	183	14
B5-19-1676-1	162	25
B5-19-1676-2	162	23
	210	17
BM76454	63	6
C-845-2520	305	107
C0600-063-2500S	257	32
C0600-072-1000S	257	27
C0850-098-2500S	257	33
C2026	296	21
C5-19-1175	164	2
C5-19-1662	164	3
C5-19-1773	305	31
C5-19-1827	305	30
C5-19-2354	164	1
C5-19-916-1	162	21
C5-19-916-2	162	69
	210	11
C5-19-916-3	162	70
C5-19-916-4	305	95
CB3019A3N	99	48
	107	49
CBA20-300-1	57	70
CC-7502-99-0119	173	7
CCA2-18	172	21
CH-150F	305	8
CL-6-HRP	187	16
CL-60-SPS-2	187	1
CLB-203-10	271	61
	275	63
[redacted]	[redacted]	[redacted]
	[redacted]	[redacted]
CMO0938-1-A	130	12
CR06W	305	62
CR08W	305	96
CR108SB10	180	1
CR10W	305	63
CR12W	305	64
CR13W	305	65
CS125-1032-24CR	12	15
CTM5900	305	77
CYR1 7-8S	138	49
D-600-0174	272	6
	278	4
	[redacted]	[redacted]
D-600-0175	272	13

PART NUMBER	FIG.	ITEM
	278	6
[redacted]	[redacted]	[redacted]
D38999/20WA98PA	235	98
[redacted]	[redacted]	[redacted]
D38999/32M09N	272	5
D38999/32M11R	100	11
D38999/32M13R	100	10
D38999/32M17R	100	9
[redacted]	[redacted]	[redacted]
D38999/32W25R	100	19
	108	20
D38999/33M11N	271	45
	275	47
[redacted]	[redacted]	[redacted]
D38999/33M13N	271	46
	275	48
D38999/33M15N	271	47
	275	49
D38999/33M21N	268	29
D38999/33M23N	268	28
D5-19-1754	162	47
D5-19-2353	162	46
E5-77-2120	325	4
[redacted]	[redacted]	[redacted]
EGP5C42TRL8	300	46
ELRN-016229789	300	37
F-ADP-DFX-0443-1B	328	11
F-ADP-DFX-0444-1A	328	11
F-ADP-DFX-0450-1C	328	11
F-ADP-DFX-0451-2A	328	11
F-ADP-DFX-0452-2B	328	11
F-ATA-DF5-P/S-M1	328	4

PART NUMBER	FIG.	ITEM
F-CASE-DFX-M1	328	12
F-CSET-DF5-SATA	328	2
F-KIT-DFX5-M1	328	9
F-KYBD-D	328	8
F-LCD-XGA-15	328	3
F-POINT-PS2-W	328	5
F-SATA-DATACABLE	328	6
F-SATA-DFX-5	328	10
F-SATA-POWERCABLE	328	7
F451TCJC06060606YE-18	133	88
F451TCJC39060606YE-18	133	102
F451TCJC39060606YE-42	133	101
F451TCJCJ7060606YE-15	133	87
F451TCJCJ9060606YE-18	133	105
FK1143KKK040.000	61	10
FM25-S01M	173	27
G903	320	6
G959	320	2
GD32	98	51
	106	54
HC7 TYPE 5	305	12
HM019-017-BSC	119	48
HM045-010-21	119	21
HM045-025-3	119	25
HM045-027-11	119	9
J1231 6-4-430360S	55	11
J1231-20-24-430250D	141	51
J1231-4-6 430160S	57	26
J1231-6-4-43160C	57	30
J1231-6-8 430160S	57	37
J1231-6-8 430260S	57	23
J1508,TYPE F,STYLE4,5/16 HEX,-60	81	26

PART NUMBER	FIG.	ITEM
	141	28
J221P126	73	67
	86	22
J221P149	73	88
	86	42
J221P154	73	56
	86	36
J58 1/2-13UNC-3AX3.000NOM	203	2
K600A282-03	96	30
	104	30
LA72	305	5
LB244	305	35
LC35GT2	112	6
LC35RN2	112	11
LC35YN2	112	17
LE-067E-07M	138	12
LF0051638A	KITS	1
LH90725-59	95	67
	98	8
	100	28
	103	66
	106	8
	108	26
LP02-EPDM01	172	30
	173	53
	282	6
[redacted]	[redacted]	[redacted]
LP02-EPDM09	125	6
LS1528	172	69
M10215-1F105	96	29
	104	29
[redacted]	[redacted]	[redacted]

PART NUMBER	FIG.	ITEM
[redacted]	[redacted]	[redacted]
M12133/1-11P	224	15
M12133/1-5P	19	9
M12133/2-380	172	39
M12285/1-6	59	58
M12285/2-4	59	54
M15570-20	305	21
M22520/5-01	305	1
M22520/5-100	305	4
M22529/2-2R-25	BULK	4
M22759/1-16-9	311	7
M22759/1-20-9	311	8
M22759/11-22-8	239	18
	240	15
M22759/11-24-9	235	81
	256	10
M23053/13-002-0	59	79
M23053/5-102-4	241	43
M23053/5-103-4	241	17
M23053/5-106-0	192	6
	BULK	23
M23053/5-106-4	241	21
M23053/5-108-4	241	47
M23053/5-110-0	311	6
M24066/2-310	218	18
M24066/2-346	210	12
M24240/3-20820	132	72
	133	109
M2742630158D	75	41
M27500-24RC3T09-908	241	18
M27500-24RC3T09-931	241	45
M3190/7-20-1	75	9
	BULK	24

PART NUMBER	FIG.	ITEM
M3424 GC	147	8
M39012/25-0019	300	69
M39024/10-12	311	13
M39024/10-13	311	12
M45913/1-010CG8Z	138	55
M45913/1-010[redacted]	59	66
	172	1
M45913/1-10CG5C	17	11
	57	41
	58	26
M45913/1-10CG5Z	185	37
M45913/1-12CG5C	15	33
M45913/1-14CG5C	15	15
M45913/1-14[redacted]	125	1
M45913/1-20CG5C	15	30
M45913/1-4CG5C	39	24
	40	48
	94	68
	95	42
	98	59
	99	13
	102	76
	103	41
	106	67
	107	14
	109	61
	127	68
	162	27
	170	9
	171	4
	[redacted]	[redacted]
M45913/1-4CG5Z	12	9
	27	13
	28	13
	29	81
	57	112
	59	24
	81	39
	126	35
	129	19
	133	36
	146	33
	161	8
	168	9
	183	6
	184	68
	185	78
	187	32
	199	4
	200	5
	226	1
	243	19
	257	24
	[redacted]	[redacted]
	[redacted]	[redacted]
	270	15
	271	81
	274	17
	275	83
	[redacted]	[redacted]
	[redacted]	[redacted]
M45913/1-4CG8Z	98	39
	106	38
	172	33
	193	29
	194	14

PART NUMBER	FIG.	ITEM
	300	18
M45913/1-4FG5C	126	36
	139	9
M45913/1-4FG5Z	59	80
	140	9
M45913/1-4FG8Z	227	11
M45913/1-5CG5C	58	36
	95	71
	97	21
	103	72
	105	30
	107	58
	126	21
	137	11
	181	52
	233	5
	274	43
	275	24
[redacted]	[redacted]	[redacted]
M45913/1-5CG8Z	138	24
	200	23
M45913/1-5FG5C	126	32
	139	1
M45913/1-5FG5Z	140	1
M45913/1-6CG5C	12	7
	19	4
	25	57
	27	1
	28	1
	29	72
	39	70
	40	67
	59	45

PART NUMBER	FIG.	ITEM
	94	69
	98	36
	102	71
	106	45
	123	19
	126	49
	137	6
	139	19
	145	13
	161	22
	168	4
	171	17
	188	1
	199	28
	224	10
	232	20
[redacted]	[redacted]	[redacted]
[redacted]	[redacted]	[redacted]
M45913/1-6CG5Z	136	14
	140	27
	146	29
	154	21
	185	79
	211	7
[redacted]	[redacted]	[redacted]
	296	10
[redacted]	[redacted]	[redacted]
M45913/1-6CG8Z	138	18
	173	45
	194	10
	198	7
	200	33
	300	17

PART NUMBER	FIG.	ITEM
M45913/1-6CS3	197	5
M45913/1-6FG8Z	227	9
M45913/1-7CG8Z	138	20
M45913/1-8CG5C	57	38
	58	50
	129	29
	193	35
	194	38
	224	17
	261	21
	[redacted]	[redacted]
M45913/1-8CG5Z	184	13
	184	43
	185	40
	[redacted]	[redacted]
	296	19
M45913/1-8CG8Z	173	16
M45913/1-8FG5C	57	74
	59	13
M45913/2-16CG8Z	2	30
M45913/2-4CG8Z	135	10
	136	2
	138	47
M45913/2-5CG8Z	157	21
M45913/2-6CG5C	135	19
M45913/2-6CG5Z	135	15
	136	10
M45913/2-6CG8Z	136	19
	172	59
M45913/2-6FG5C	123	11
	126	31
	129	44
	206	7

PART NUMBER	FIG.	ITEM
M45913/2-6FG5Z	132	64
	133	81
M45913/2-8CG8Z	172	65
M45913/3-4CG8C	58	38
	123	8
M45913/3-4FG8Z	73	19
[redacted]	[redacted]	[redacted]
M5423/16-01	235	90
	237	28
M55339/17-00274	108	54
M6000-N-01000	BULK	20
M62678-2-24N1	154	61
M6363/8-5AS15	112	10
M6363/8-7	270	24
	271	25
	274	29
	275	29
M7928/4-148	241	11
M81044/9-20-9	192	5
	BULK	55
M81914/4-1110	272	45
	278	43
M81934/1-06C018	127	78
M81934/1-08C011	130	40
M81934/1-08C028	190	42
M81934/2-06A020	161	26
M81934/2-10C024	132	69
	133	86
[redacted]	[redacted]	[redacted]
[redacted]	[redacted]	[redacted]
M81969/14-03	305	22
M81969/14-04	305	23
M81969/19-01	305	97

PART NUMBER	FIG.	ITEM
M83248/1-014	58	3
M83248/1-017	58	10
M83248/1-043	73	78
	86	38
M83248/1-128	73	100
M83248/1-130	73	95
M83248/1-140	59	19
	75	34
M83248/1-141	58	8
M83248/1-143	75	15
M83248/1-145	156	3
M83248/1-171	58	4
M83413/8-A005BC	271	48
	275	50
M83413/8-A008BC	96	38
	104	37
M83413/8-A009BC	155	27
M83413/8-A012BB	271	55
M83413/8-A24CC	106	69
M83461/1-012	78	17
	134	47
	255	72
M83461/1-222	87	4
M83461/1-226	238	45
M83519/1-2	192	2
M83519/2-13	239	17
	240	14
M85049/138-26A	95	37
	103	37
	109	56
[redacted]	[redacted]	[redacted]
[redacted]	[redacted]	[redacted]
M8805-65-001	145	3

PART NUMBER	FIG.	ITEM
M900	320	1
MA326-21113	305	11
MA326-21373	305	53
MDL-10	295	2
MIL-I-3190/7-12-1	75	38
MIL-PRF-51193E	162	15
MIL-PRF-62550/2	154	35
MILH51191	162	42
	210	1
MS122032	62	272
	63	13
MS13962-2	142	20
	143	20
MS14102-16	221	4
MS14104-12	132	54
	133	71
MS15003-6	307	1
MS15795-514	271	5
	275	8
MS15795-710	168	10
	170	8
MS15795-743	127	6
MS15795-802B	174	12
MS15795-803	93	11
	235	77
	236	22
	237	31
	239	6
	240	11
	256	4
	260	3
MS15795-804	300	33
MS15795-805	249	17

PART NUMBER	FIG.	ITEM
	255	61
MS15795-806	75	17
	172	18
MS15795-807	235	10
	238	61
	255	28
	[redacted]	
MS15795-808	133	63
	160	9
	162	56
	172	2
	234	9
	235	114
	236	7
	237	15
	238	31
	254	7
	255	8
MS15795-809	130	19
MS15795-810	93	16
	95	74
	98	28
	103	75
	106	27
	127	99
	133	2
	140	4
	172	23
	173	4
	190	1
	197	3

PART NUMBER	FIG.	ITEM
	198	3
	200	25
	218	30
	236	3
	238	14
	255	21
	[redacted]	
	324	10
MS15795-810B	138	7
MS15795-811	169	5
MS15795-812B	138	4
MS15795-813	127	100
MS15795-814	2	18
	38	112
	109	8
	119	68
	121	7
	127	58
	130	15
	136	11
	140	24
	166	5
	173	13
	197	1
	198	1
	200	29
	218	6
	234	7

PART NUMBER	FIG.	ITEM
	236	26
	254	4
	257	26
	270	41
	274	51
MS15795-814B	138	16
	146	36
	154	45
MS15795-815	93	5
	93	8
	93	23
	323	4
MS15795-816	123	28
MS15795-816B	138	19
MS15795-818	133	16
	140	33
	184	15
	200	9
	200	32
	323	8
MS15795-841	246	18
	251	20
MS15795-842	109	20
	119	40
	195	2
	196	2
MS15795-846	59	69
	202	14
MS15795-848	9	2
	237	67
	257	28
MS15795-852	27	7
	28	7
	97	5
	105	8
	120	2
	121	2
MS15795-853	119	29
	172	51
MS15795-858	59	86
MS16228-4C	2	22
MS16555-46	223	3
	235	23
	238	12
	255	31
MS16555-54	73	40
MS16555-640	249	15
MS16555-647	245	10
MS16555-648	38	4
MS16555-651	247	12
MS16555-661	92	2
MS16555-668	74	3
MS16555-7	19	8
MS16555-77	23	6
	177	14
MS16556-47	73	26
MS16556-646	85	5
MS16556-695	182	39
MS16556-846	84	5
MS16562-212	235	94
	237	23
	255	87
MS16562-216	225	11
MS16562-223	235	101
	238	50
	255	59

PART NUMBER	FIG.	ITEM
MS16562-226	140	31
MS16562-227	140	28
MS16562-231	235	93
	237	6
	255	85
MS16562-236	235	4
	255	69
MS16562-238	140	34
	200	8
MS16562-239	132	35
	133	29
	138	23
MS16562-25	213	20
MS16562-256	230	2
MS16562-257	138	37
MS16562-262	165	7
MS16562-264	33	10
MS16562-266	15	53
MS16562-27	127	31
MS16562-29	25	129
	141	14
	161	4
MS16562-33	127	76
	312	14
MS16562-35	201	15
	243	17
MS16562-36	137	15
MS16562-37	124	2
MS16562-38	113	4
	137	13
	139	26
MS16562-49	257	6
MS16562-50	14	14
	139	14
	199	10
MS16562-51	123	30
	124	6
MS16562-52	229	4
MS16562-63	215	7
MS16562-64	73	3
	257	5
MS16562-65	2	48
	187	2
MS16562-68	315	5
MS16562-74	32	9
	165	18
MS16562-78	177	13
	223	10
MS16624-1050	312	10
MS16624-1062	126	46
MS16624-1100	132	33
	133	4
MS16624-1137	223	19
MS16624-1350	53	24
MS16624-2050	199	14
	200	7
MS16624-2056	139	25
	140	13
MS16624-2059	142	28
	143	29
MS16624-2125	38	5
MS16624-4037	145	26
	255	75
MS16624-4046	238	18
MS16624-4050	235	13
	238	17

PART NUMBER	FIG.	ITEM
	255	88
MS16624-4056	237	53
MS16624-4062	324	4
MS16624-4066	235	8
	238	28
	255	82
MS16624-4078	255	16
MS16624-4098	235	48
	255	13
MS16624-4100	238	73
MS16624-4131	238	56
MS16624-4137	255	4
MS16624-4156	235	68
MS16624-5012	241	26
MS16625-1102	243	33
MS16625-1334	85	7
MS16625-2062	73	14
MS16625-3187	73	28
	86	11
MS16625-4087	255	80
MS16625-4112	235	26
MS16625-4125	238	22
MS16625-4137	324	6
MS16625-4156	237	45
	238	27
	255	46
MS16625-4185	255	18
MS16625-4206	235	49
	238	58
	255	11
MS16625-4244	238	76
MS16625-4268	235	88
MS16625-4281	255	1

PART NUMBER	FIG.	ITEM
MS16625-4315	235	69
MS16626-4100	238	40
MS16629-137	142	29
	143	30
MS16633-4012	145	10
	246	3
	249	18
MS16633-4018	138	58
	245	4
MS16633-4050		
MS16633-4075		
MS16995-10	251	14
MS16995-16	172	47
MS16995-17	125	4
	245	8
	251	11
[redacted]	[redacted]	[redacted]
MS16995-20	249	3
MS16995-26	241	50
MS16995-28	125	8
	251	19
	[redacted]	[redacted]
MS16995-29	172	31
	173	59
	282	5
	[redacted]	[redacted]
MS16995-30	99	7
	107	24
MS16995-36	101	5
MS16995-38	246	2
MS16995-49	190	37
MS16995-50	173	57
	[redacted]	[redacted]

PART NUMBER	FIG.	ITEM
MS16995-51	244	6
[redacted]	[redacted]	[redacted]
	[redacted]	[redacted]
MS16995-55	158	33
	159	33
MS16995-79	158	35
	159	35
MS16995-83	321	5
MS16995-9	260	1
MS16996-11	130	3
MS16996-13	172	17
MS16996-14	130	11
MS16996-22	75	4
MS16996-25	253	7
MS16997-100	[redacted]	[redacted]
MS16997-102	232	19
MS16997-103	232	23
MS16997-142	31	21
MS16997-148	232	7
MS16997-19	257	13
MS16997-20	257	30
MS16997-46	105	36
MS16997-58	186	1
	233	16
MS16997-59	275	40
MS16997-61	233	14
MS16997-76	213	26
MS16998-47	134	32
MS17130-21	238	71
MS17130-62	235	106
MS17130-67	238	81
MS17130-8	238	66
MS17131-18	324	2

PART NUMBER	FIG.	ITEM
MS171477	174	2
MS171588	145	31
MS171595	235	2
	238	33
MS17183-3	256	9
MS17246-1	94	31
	102	31
	270	10
	271	13
	274	14
	275	14
MS17339-1	[redacted]	[redacted]
	[redacted]	[redacted]
MS17796-69		
MS17796-81		
MS17825-5	129	55
MS17825-6	123	2
MS17829-10C	235	53
MS17829-10F	42	5
	43	5
	44	5
MS17829Z3C	202	13
MS17829Z6C	179	50
MS17830-010C	14	3
	234	15
MS17830-4C	236	23
MS17984C611	127	66
[redacted]	[redacted]	[redacted]
	[redacted]	[redacted]
[redacted]	[redacted]	[redacted]
MS17989C514	170	27
MS17990C608	326	15
MS17990C612	55	17

PART NUMBER	FIG.	ITEM
MS18003-4811	115	20
MS19059-2414	26	8
MS19067A05	221	9
MS19067A06	73	33
MS19068-051	73	84
	86	46
MS19068-092	84	21
	85	19
MS19068-241	90	32
MS19069-A06	73	32
MS19069A05	221	8
MS19070-051	73	85
	86	45
MS19070-092	84	20
	85	18
MS19070-241	90	33
MS20002-4	73	37
	242	4
MS20002-5	95	72
	103	73
	213	25
MS20002-6	90	2
[redacted]	[redacted]	[redacted]
	314	12
MS20002-8	59	12
	73	64
	86	19
MS20002C10	253	2
MS20002C4	221	6
	223	14
MS20002C6	83	7
	220	2
	223	9
	257	39
[redacted]	[redacted]	[redacted]
[redacted]	[redacted]	[redacted]
	272	69
[redacted]	[redacted]	[redacted]
	278	67
MS20002C8	177	2
	232	8
	253	4
MS20066-102	235	74
MS20066-103	255	95
MS20066-105	237	64
	238	51
MS20066-159	238	7
MS20066-228	73	77
	86	32
MS20066-305	84	9
	85	10
MS20066-97	235	25
MS20066-98	255	47
MS20392-10C105	38	13
MS20392-10C81	25	145
MS20392-10C91	25	38
[redacted]	[redacted]	[redacted]
MS20392-10P93	132	61
	133	78
MS20392-11C55	25	150
MS20392-11C83	25	159
MS20392-12C117	38	50
MS20392-1C35	39	56
	40	53
MS20392-2C19	234	3
	235	119

PART NUMBER	FIG.	ITEM
	236	9
	237	16
	254	8
	255	52
MS20392-2C27	237	18
	238	38
	255	71
MS20392-2C29	33	8
MS20392-2C35	326	4
MS20392-2C41	127	74
	226	14
MS20392-2R17		
MS20392-2R39		
MS20392-2R43	127	85
MS20392-2R47		
MS20392-3C21	231	10
	312	7
MS20392-3C23	126	25
MS20392-3C25	161	27
	181	55
MS20392-3C31	218	22
MS20392-3C41	127	28
MS20392-3C43	162	38
MS20392-3C45	129	67
MS20392-3C71	231	2
MS20392-3C73	218	25
MS20392-3C97	226	28
MS20392-3P61	133	56
MS20392-3P83	132	38
	133	24
MS20392-4C25	38	107
MS20392-4C37	129	37
	190	43
MS20392-4C41	129	45
MS20392-4C45	129	58
MS20392-4C51	129	24
MS20392-5C31	326	11
MS20392-5C35	38	106
	205	5
MS20392-5C37	184	54
	185	61
MS20392-5C39	129	13
MS20392-5C41	127	47
	229	6
MS20392-5C59	205	12
MS20392-5C67	25	134
	38	101
	141	13
MS20392-5C97	228	8
MS20392-6C49	129	12
MS20392-6C59	135	7
MS20392-7C101	181	46
	182	24
	199	18
	200	27
MS20392-7C37	199	21
MS20392-7C59	133	48
MS20392-7C65	190	11
MS20392-7C79	132	1
MS20392-7C91	139	30
	140	18
MS20392-7C95	129	51
MS20392-7P39	132	28
	133	17
[redacted]	[redacted]	[redacted]
[redacted]	[redacted]	[redacted]

PART NUMBER	FIG.	ITEM
[redacted]	[redacted]	[redacted]
MS20426B5-6	152	4
MS20426B5-7	153	5
	153	15
MS20470B4-6	7	1
MS20600B4W4	81	25
MS20604AD4W4	214	2
	218	13
MS20613-5P10	113	13
MS20913-1S	59	77
MS20913-2S	73	75
MS20913-8S	210	18
MS21043-08	160	8
MS21044-N8	123	42
MS21044C06	201	21
MS21044C3	195	1
	196	1
MS21044F-N3	271	82
	275	84
MS21044N06	94	87
	96	41
	102	49
	104	41
MS21044N08	99	25
	107	9
	271	58
	275	60
	300	1
MS21044N3	12	13
	27	53
	28	62
	39	81
	40	87
	57	52
	59	20
	60	6
	61	12
	94	45
	95	6
	97	9
	99	43
	100	31
	102	56
	103	6
	105	24
	107	43
	108	29
	149	12
	153	12
	181	66
	182	7
	191	18
	210	31
	271	66
	275	68
MS21044N4	81	35
	98	1
	98	21
	106	19
	239	12
MS21083-C3	172	74
	173	61
MS21083-N04	206	6
MS21083C08	172	27
	[redacted]	[redacted]
MS21083C3	118	55

PART NUMBER	FIG.	ITEM
	119	34
MS21083C4	119	27
MS21083C6	38	126
MS21083N06	151	8
	153	11
MS21083N08	95	21
	98	53
	99	11
	103	21
	106	56
	107	28
	173	26
	242	1
	[redacted]	[redacted]
	282	10
	[redacted]	[redacted]
MS21083N3	27	49
	28	54
	151	1
	153	23
	154	41
	178	19
	179	9
	268	20
	270	11
	271	20
	274	15
	276	21
MS21083N4	27	61
	28	67
	106	1
	134	11
	183	17

PART NUMBER	FIG.	ITEM
	243	7
MS21090-0412	235	76
	237	30
	256	3
MS21090-0622	235	46
MS21090-0624	255	62
MS21090-0838	238	62
MS21090-463	120	3
MS21098-83	43	12
	44	12
MS21209C6-15	84	4
	85	4
MS21262-93	227	39
MS21266-2N	95	93
	103	30
	110	61
MS21266-4N	95	62
	103	61
MS21266-5N	95	30
	95	35
	103	30
	109	2
	109	18
	109	43
	109	45
	109	46
	109	53
	110	28
MS21295-13	199	33
[redacted]	[redacted]	[redacted]
MS21316-33	314	9
MS21316-58	315	8
MS21318-1	73	98

PART NUMBER	FIG.	ITEM
	84	1
	86	48
	90	27
MS21318-15	218	17
MS21318-2	75	21
	85	2
MS21318-29	24	2
	177	17
MS21318-3	60	25
	177	7
MS21318-7	78	11
[redacted]	[redacted]	[redacted]
MS21333-104	272	56
	278	53
	300	29
MS21333-107	117	16
	126	34
	272	61
	274	47
	278	61
MS21333-119	300	28
MS21333-120	94	18
	102	18
MS21333-129	141	37
	144	8
MS21333-21	154	29
MS21333-22	154	28
MS21333-26	154	4
MS21333-39	192	4
[redacted]	[redacted]	[redacted]
MS21333-98	191	13
	271	11
	272	54

PART NUMBER	FIG.	ITEM
	274	2
	275	12
MS21333-99	191	10
MS21334-25	127	86
MS21340-04	235	92
	237	27
	237	39
	255	65
	271	31
	275	35
MS21919WDF15	117	35
MS21919WDF24	81	32
MS21919WDG48	59	22
MS21919WDG6	59	50
	99	42
	100	26
	107	42
MS22064-5	210	10
MS24171-D1	95	87
	103	85
	110	50
MS24185-D1	95	91
	103	89
	110	55
MS24398-6-4	25	113
MS24523-22	311	17
MS24566-5B	229	9
MS24585-1067	215	8
MS24585-1188	213	18
MS24585-1409	139	16
MS24585-1490	137	26
MS24585-C22	249	10
MS24585C105	249	12

PART NUMBER	FIG.	ITEM
MS24586-708	2	50
MS24586-739	243	8
MS24586-775	129	30
MS24586-C184	228	13
MS24662-173	210	13
MS24665-132	33	3
	39	59
	40	57
	126	28
	127	29
	161	9
	162	37
	218	28
	231	4
	312	11
	326	6
MS24665-134	12	27
	129	56
	147	6
	181	51
MS24665-151	127	70
	234	13
	235	113
	236	6
	237	10
	238	54
	254	6
	255	51
	271	53
	275	55
MS24665-153	132	37
	133	23
MS24665-172	226	21
MS24665-212	326	18
MS24665-281	127	50
	129	35
MS24665-283	25	125
	38	94
	55	14
	123	1
	129	9
	135	6
	137	28
	141	16
	205	1
	228	22
	229	8
MS24665-285	25	154
	127	75
	129	26
	132	16
	139	31
	140	19
	181	64
	182	22
	184	63
	185	71
	199	13
MS24665-300	326	14
MS24665-302	133	15
	200	31
MS24665-317	190	45
MS24665-319	190	19
MS24665-353	25	67
	123	32
	228	11

PART NUMBER	FIG.	ITEM
MS24665-355	25	40
	182	13
MS24665-357	25	7
MS24665-360	16	12
MS24665-370	73	63
	86	18
	154	5
MS24665-372	132	51
	133	68
MS24665-374	125	11
	132	57
	133	74
MS24665-378	15	18
[redacted]	[redacted]	[redacted]
	[redacted]	[redacted]
MS24665-439	25	148
MS24665-441	38	54
MS24665-491	213	14
MS24665-497	46	12
	51	12
	52	19
MS24665-502	53	22
MS24665-628	16	10
MS24665-629	16	6
MS24665-69	226	11
MS24667-13ZL	270	44
	274	53
MS24667-20Z	132	45
MS24667-27ZL	132	101
	133	135
MS24667-29L	144	13
MS24667-29ZL	132	99
	133	133

PART NUMBER	FIG.	ITEM
MS24667-30Z	300	49
[redacted]	[redacted]	[redacted]
MS24667-32Z	135	14
	136	5
MS24667-52	41	6
MS24667-52Z	109	37
MS24667-54	39	78
	40	91
MS24667-55	25	95
MS24667-74	184	97
	184	97
	185	114
	185	114
MS24671-21	172	64
MS24671-28	172	38
MS24671-51	110	31
MS24674-2	241	57
MS24693-C2	241	7
MS24693-C48	78	1
MS25036-106	311	16
MS25036-110	75	11
MS25036-122	75	10
MS25036-153	147	14
MS25036-156	147	13
MS25042-10DA	96	42
	104	42
MS25082-10	127	16
MS25082-C1	95	53
	103	53
	109	71
	110	42
MS25089-1A	241	38
MS25224-3	271	30

PART NUMBER	FIG.	ITEM
	275	34
MS25231-313	94	33
	102	33
	155	24
	271	17
	275	18
[redacted]	[redacted]	[redacted]
	[redacted]	[redacted]
MS27130-S105K	126	54
MS27142-2	163	2
MS27144-1	163	4
MS27144-3	163	3
MS27151-28	127	15
MS27183-10	12	11
	15	42
	19	7
	21	12
	27	5
	28	5
	39	35
	40	11
	57	90
	59	25
	61	33
	81	5
	82	2
	94	27
	95	43
	96	18
	97	26
	98	43
	99	10
	102	26

PART NUMBER	FIG.	ITEM
	103	42
	104	18
	105	18
	106	47
	106	50
	107	27
	109	62
	118	48
	126	27
	127	67
	129	18
	139	4
	146	5
	155	10
	157	34
	158	1
	159	1
	161	7
	162	9
	171	2
	183	18
	191	2
	193	40
	194	43
	199	2
	205	9
	207	5
	208	11
	209	11
	210	22
	227	6
	228	3
	232	2

PART NUMBER	FIG.	ITEM
	243	31
	257	3
	[redacted]	[redacted]
	[redacted]	[redacted]
	[redacted]	[redacted]
	[redacted]	[redacted]
	[redacted]	[redacted]
	[redacted]	[redacted]
	270	14
	271	34
	274	6
	275	11
	[redacted]	[redacted]
	[redacted]	[redacted]
	[redacted]	[redacted]
	326	17
MS27183-11	98	2
	106	2
	146	32
	178	3
MS27183-12	38	31
	59	35
	95	2
	99	3
	103	2
	107	3
	113	9
	126	11
	137	10
	233	6
	268	13
	[redacted]	[redacted]
	275	23

PART NUMBER	FIG.	ITEM
	276	14
	[redacted]	[redacted]
	[redacted]	[redacted]
	326	19
MS27183-13	38	2
	99	52
	107	57
	274	44
MS27183-14	12	2
	15	26
	18	18
	19	3
	22	11
	25	8
	27	2
	28	2
	29	74
	30	27
	31	23
	38	61
	39	27
	40	4
	41	16
	55	13
	57	58
	59	28
	60	4
	61	14
	62	44
	81	11
	82	16
	95	66
	96	46

PART NUMBER	FIG.	ITEM
	97	15
	98	9
	100	30
	103	64
	104	46
	105	11
	106	9
	108	28
	117	44
	118	5
	120	7
	126	15
	127	48
	129	41
	135	8
	137	19
	139	23
	141	9
	146	14
	154	17
	161	3
	178	6
	179	1
	184	62
	185	70
	186	15
	187	11
	188	4
	190	38
	199	26
	206	5
	207	2
	212	3

PART NUMBER	FIG.	ITEM
	224	2
	227	36
	228	9
	229	7
	232	18
	233	3
	[redacted]	[redacted]
	[redacted]	[redacted]
	271	74
	275	77
	[redacted]	[redacted]
	326	13
MS27183-15	12	8
	29	73
	32	3
	33	17
	40	17
	95	69
	103	70
	146	54
	188	15
	224	22
MS27183-16	60	16
	61	39
	126	50
MS27183-18	25	46
	25	120
	39	2
	40	14
	57	35
	58	21
	113	5
	118	21

PART NUMBER	FIG.	ITEM
	127	25
	132	2
	137	25
	139	13
	140	14
	178	16
	179	11
	184	81
	185	94
	199	19
	213	16
	224	14
	225	9
	228	12
	261	23
	[redacted]	[redacted]
	326	8
MS27183-19	38	58
	184	29
	185	29
MS27183-21	29	35
	30	34
	39	8
	58	25
	60	48
	[redacted]	[redacted]
MS27183-22	38	43
	39	10
	40	22
MS27183-23	2	47
	25	35
MS27183-24	58	34
MS27183-25	184	49

PART NUMBER	FIG.	ITEM
	184	49
	185	55
	185	55
MS27183-3	169	11
	206	2
	223	22
MS27183-30	15	29
MS27183-4	199	32
	314	2
MS27183-41	95	19
	99	8
	103	19
	107	25
	127	79
	151	7
	153	10
	155	21
	271	57
	275	59
MS27183-42	12	26
	25	68
	25	99
	27	48
	28	53
	81	51
	96	2
	97	35
	104	2
	105	39
	118	67
	127	39
	149	11
	151	2

PART NUMBER	FIG.	ITEM
	153	22
	154	24
	162	6
	191	17
	268	22
	270	26
	271	21
	274	27
	275	25
	276	23
MS27183-44	25	85
MS27183-47	94	36
	102	36
	146	26
	271	80
	275	80
MS27183-5	39	60
	40	56
	96	51
	104	51
MS27183-50	173	8
	271	8
	275	4
MS27183-52	38	22
	181	38
	182	26
	190	4
	[redacted]	[redacted]
MS27183-57	41	9
	127	12
	154	2
	166	5
[redacted]	[redacted]	[redacted]

PART NUMBER	FIG.	ITEM
MS27183-7	59	37
	98	50
	99	28
	106	53
	107	6
	113	16
	208	7
	209	7
	[redacted]	[redacted]
MS27183-8	14	4
	94	60
	102	62
	153	13
	173	19
	326	5
MS27183-9	18	8
	63	12
	173	25
	213	12
	226	2
	268	15
	270	3
	274	8
	276	16
MS27488-12-3	94	3
	98	6
	102	3
	106	6
[redacted]	[redacted]	[redacted]
MS27769-2	86	15
MS27769-3	52	7
	53	16
	55	10

PART NUMBER	FIG.	ITEM
MS27769-4	38	47
MS27769-7	162	22
MS27950-6	183	12
MS27975-3	234	2
	236	8
	237	20
MS27977-20C	12	21
	157	29
	169	16
MS28775-010	134	54
MS28775-011	134	71
MS28775-012	235	103
	237	59
MS28775-013	78	18
	134	17
MS28775-014	134	51
MS28775-016	78	13
MS28775-017	78	22
MS28775-018	78	12
MS28775-020	78	7
MS28775-021	78	16
MS28775-022	78	8
MS28775-025	78	4
	134	60
MS28775-036	78	3
MS28775-041	174	6
MS28775-043	46	4
	51	4
	52	21
MS28775-112	307	3
MS28775-113	134	19
MS28775-114	115	8
MS28775-117	47	3

PART NUMBER	FIG.	ITEM
	54	4
MS28775-126	235	55
MS28775-133	255	44
MS28775-137	256	7
MS28775-146	42	30
	43	42
	44	42
MS28775-153	234	6
	236	28
	254	3
MS28775-212	15	39
	65	14
	142	16
	143	16
MS28775-224	15	38
MS28775-228	143	13
MS28775-236	52	1
MS28775-246	53	4
MS28775-329	235	63
MS28775-358	42	33
	43	43
	44	43
MS28778-12	55	5
MS28778-16	59	56
	61	8
MS28778-24	57	105
	61	4
MS28778-4	25	69
	59	76
	132	86
	133	125
MS28778-6	25	80
	58	15

PART NUMBER	FIG.	ITEM
	61	31
	127	4
	132	78
	133	116
MS28778-8	25	87
	127	2
	235	83
	256	12
MS28884B12	60	33
MS28893-D4-2500	132	87
	133	126
MS28893A4	132	93
	133	131
MS29512-06	117	6
	154	71
MS29512-08	63	8
MS29512-10	60	39
MS29512-12	117	14
MS29513-033	134	53
MS29513-161	134	4
MS29513-175	90	31
MS29513-212	25	3
MS29513-252	119	7
MS29513-270	119	6
MS29513-339	14	10
MS29561-130	238	36
MS3105-14	206	3
MS3215-2050	213	27
MS3217-1050	145	1
MS3367-1-0	57	29
	59	49
	61	19
	132	84
	133	90
	144	6
MS3367-1-9	96	43
	99	33
	104	43
	105	23
	107	19
MS3367-2-0	59	60
	96	14
	104	14
MS3367-2-9	25	59
	59	78
	60	57
	95	52
	96	13
	100	7
	103	50
	104	13
	106	29
	107	37
	108	7
	109	13
	109	70
	110	1
	145	25
	154	70
	162	61
	210	15
	[redacted]	[redacted]
	270	38
	272	32
	[redacted]	[redacted]
	274	41

PART NUMBER	FIG.	ITEM
	[redacted]	[redacted]
	278	40
	[redacted]	[redacted]
	[redacted]	[redacted]
	[redacted]	[redacted]
	[redacted]	[redacted]
	300	65
	[redacted]	[redacted]
MS3367-3-0	59	53
MS3367-3-9	60	56
	99	37
	100	22
	108	15
	108	23
	126	6
	132	97
	133	103
	162	58
	173	35
	268	11
	[redacted]	[redacted]
	270	1
	272	57
	274	24
	276	12
	[redacted]	[redacted]
	278	18
	[redacted]	[redacted]
	300	66
MS3367-4-0	141	24
MS3367-4-9	75	8
	300	68
MS3367-6-0	60	58

PART NUMBER	FIG.	ITEM
	61	11
MS3367-7-0	127	64
MS3367-7-9	210	29
MS3454W28-21S	311	15
MS3456W28-21P	311	5
MS35190-224	314	6
MS35190-243	30	8
	94	85
	102	47
	211	1
MS35190-252	113	11
MS35190-255	98	47
	106	58
MS35190-286	98	46
	106	44
MS35190-287	38	115
	[redacted]	[redacted]
	[redacted]	[redacted]
MS35190-288	15	44
	208	4
	209	4
MS35190-289	27	34
	28	40
	222	3
	[redacted]	[redacted]
MS35190-290	187	31
MS35190-293	27	63
	28	69
MS35190-317	186	16
	187	21
MS35190-319	21	11
MS35190-323	38	69
MS35191-293	139	28

PART NUMBER	FIG.	ITEM
	140	16
MS35206-213	93	9
MS35206-215	191	22
MS35206-216	314	1
MS35206-217	169	10
MS35206-218	25	86
	206	1
MS35206-219Z	300	31
MS35206-226	93	30
MS35206-227	99	19
	107	32
MS35206-228	151	6
	155	25
	282	8
	[redacted]	[redacted]
MS35206-228Z	172	28
	173	55
MS35206-229Z	127	115
MS35206-230	153	9
MS35206-230Z	172	42
MS35206-231	149	9
MS35206-232	96	39
	104	39
MS35206-241	115	10
MS35206-242	115	7
MS35206-243	173	2
	218	11
[redacted]	[redacted]	[redacted]
MS35206-245	98	48
	106	51
MS35206-245Z	9	1
	[redacted]	[redacted]
MS35206-246	95	18
	103	18
	[redacted]	[redacted]
MS35206-246Z	127	113
MS35206-247	99	30
	107	5
	164	5
	208	5
	209	5
MS35206-247Z	160	12
MS35206-249	93	33
MS35206-250	242	7
MS35206-254Z	300	4
MS35206-261	268	23
	271	26
	275	30
	276	24
MS35206-261Z	271	41
MS35206-262	190	33
MS35206-262Z	109	36
MS35206-263	39	65
	40	62
	59	51
	118	69
	141	50
	154	31
	210	16
	268	9
	270	27
	271	14
	272	33
	274	26
	275	15
	276	10

PART NUMBER	FIG.	ITEM
	278	16
MS35206-263Z	109	22
MS35206-264	14	7
	117	37
	118	50
	162	4
	275	85
MS35206-264Z	94	34
	96	3
	102	34
	104	3
	141	20
	146	27
MS35206-265	118	14
	144	3
	162	32
	228	7
MS35206-265Z	202	10
MS35206-266	97	34
	105	40
MS35206-267	162	59
	173	18
	210	8
MS35206-267Z	162	68
MS35206-269	268	18
	276	19
MS35206-273	268	24
	276	25
MS35206-278	272	55
	278	52
MS35206-279	59	40
	98	34
	106	34
	137	31
	182	38
	228	15
	243	9
	272	62
	274	46
	275	44
	278	62
MS35206-279Z	271	42
[redacted]	[redacted]	[redacted]
MS35206-280	137	4
	162	17
	168	11
	183	4
	199	1
	314	5
MS35206-280Z	200	24
MS35206-281	168	13
	170	7
	181	39
	182	27
	207	4
[redacted]	[redacted]	[redacted]
MS35206-282	81	17
MS35206-283	268	14
	270	17
	274	19
	276	15
[redacted]	[redacted]	[redacted]
	300	48
[redacted]	[redacted]	[redacted]
MS35206-287	27	57
	28	63

PART NUMBER	FIG.	ITEM
MS35206-294	47	6
	54	1
MS35206-298	137	8
MS35206-309	181	6
MS35206-312	218	24
[redacted]	[redacted]	[redacted]
	[redacted]	[redacted]
MS35206-350	137	12
[redacted]	[redacted]	[redacted]
MS35207-261	149	8
MS35207-262Z	300	34
MS35207-263	60	63
	95	48
	103	47
	109	67
	149	10
	154	38
	191	23
MS35207-264	39	67
	40	64
	57	50
	59	63
	60	76
	61	16
	81	50
	95	23
	99	45
	107	45
	153	2
	153	18
	154	55
	191	15
	195	4
	196	4
	270	21
	271	83
	274	23
MS35207-265	27	56
	28	61
	59	23
	60	2
	61	40
	94	43
	95	10
	100	33
	102	72
	103	10
	105	28
	108	31
	109	54
	151	10
	181	60
	182	10
	227	32
	271	63
	275	65
MS35207-266	57	73
	59	29
	210	32
[redacted]	[redacted]	[redacted]
MS35207-267	27	43
	28	49
	95	9
	97	11
	100	35
	103	9

PART NUMBER	FIG.	ITEM
	103	23
	105	25
	108	32
MS35207-269	268	19
	271	22
	275	26
	276	20
MS35207-272	270	34
	274	38
MS35207-280	183	21
MS35207-281	134	8
MS35265-47	311	10
MS35275-242	78	20
MS35275-244	78	15
MS35275-247	246	16
MS35307-305	97	3
	105	6
	142	12
	143	12
MS35307-308	81	9
MS35307-317	142	10
	143	34
MS35307-357	75	30
MS35307-360	59	7
MS35307-365	94	55
	102	50
[redacted]	[redacted]	[redacted]
MS35307-409	59	10
MS35308-365	323	2
MS35308-414	323	12
MS35333-125	126	5
MS35333-135	59	41
MS35333-136	237	38

PART NUMBER	FIG.	ITEM
	255	66
	271	32
	275	36
MS35333-155	9	17
[redacted]	[redacted]	[redacted]
MS35333-37	99	20
	107	31
	282	7
[redacted]	[redacted]	[redacted]
MS35333-38	96	20
	104	20
	104	31
	115	11
	155	19
	208	6
	209	6
	218	10
MS35333-39	39	64
	40	61
	94	46
	96	15
	102	58
	104	15
	117	36
	118	13
	141	21
	154	30
	162	5
	173	31
	210	7
	268	25
	271	15
	275	16

PART NUMBER	FIG.	ITEM
	276	26
MS35333-40	27	8
	28	8
	94	29
	96	37
	97	23
	98	33
	99	14
	102	28
	104	38
	105	15
	106	33
	107	15
	117	76
	129	17
	134	9
	144	10
	146	2
	155	11
	157	33
	158	2
	159	2
	161	11
	162	8
	171	7
	183	3
	210	21
	211	31
	268	6
[redacted]	[redacted]	
	270	31
	271	2
	272	65
	274	34
	275	2
	276	6
[redacted]	[redacted]	
	278	55
[redacted]	[redacted]	
MS35333-41	99	16
[redacted]	[redacted]	
MS35333-42	2	3
	25	126
	32	4
	33	18
	35	5
	38	65
	39	25
	40	52
	59	46
	95	66
	96	45
	97	16
	100	29
	103	65
	104	45
	105	10
	108	27
	117	43
	118	40
	120	6
	123	14
	126	42
	129	6
	141	18
	146	10

PART NUMBER	FIG.	ITEM
	154	9
	161	20
	168	5
	218	20
	224	20
	[redacted]	[redacted]
	312	5
MS35333-44	118	9
	190	17
	[redacted]	[redacted]
MS35333-71	172	29
	173	54
MS35333-73	118	54
	119	14
	133	62
	271	40
	282	12
MS35333-74	81	8
	98	35
	106	35
	172	25
	173	40
	271	43
	282	12
	[redacted]	[redacted]
MS35333-76	100	29
	108	27
	109	4
	119	79
	121	8
	170	15
MS35333-81	132	12
	133	14

PART NUMBER	FIG.	ITEM
MS35334-21	96	26
	104	26
MS35335-30	155	26
[redacted]	[redacted]	[redacted]
	[redacted]	[redacted]
MS35335-34	271	51
	275	53
	[redacted]	[redacted]
MS35335-35	127	98
	274	48
MS35335-37	94	20
	102	20
MS35335-60	25	98
	235	32
	237	62
MS35335-62	99	50
	[redacted]	[redacted]
MS35335-63	172	78
	[redacted]	[redacted]
	[redacted]	[redacted]
	[redacted]	[redacted]
MS35335-65	172	14
MS35336-39	186	17
MS35338-119	300	35
MS35338-135	236	17
	241	12
	251	13
	260	2
MS35338-136	95	54
	103	52
	109	72
	110	43
	112	4

PART NUMBER	FIG.	ITEM
	125	5
	172	19
	249	2
	251	10
	260	6
MS35338-137	98	49
	106	52
	125	7
	246	17
	[redacted]	[redacted]
	[redacted]	[redacted]
	[redacted]	[redacted]
	[redacted]	[redacted]
MS35338-138	101	4
	130	2
	234	10
	236	14
	237	66
	246	1
MS35338-139	75	5
	97	4
	105	7
	130	20
	133	11
	169	6
	172	8
	173	39
	202	3
	244	5
	246	12
	[redacted]	[redacted]
	[redacted]	[redacted]
	[redacted]	[redacted]

PART NUMBER	FIG.	ITEM
	[redacted]	[redacted]
MS35338-141	59	6
	75	31
	95	85
	103	83
	109	26
	110	47
	130	6
	172	57
	173	14
	179	46
	[redacted]	[redacted]
	270	42
	[redacted]	[redacted]
	[redacted]	[redacted]
	[redacted]	[redacted]
	[redacted]	[redacted]
	323	3
MS35338-143	95	40
	103	40
	103	95
	109	58
	110	59
	130	38
	133	110
	173	29
	[redacted]	[redacted]
	[redacted]	[redacted]
	323	9
	[redacted]	[redacted]
MS35338-157	109	21
	[redacted]	[redacted]
MS35338-160	2	34

PART NUMBER	FIG.	ITEM
	109	7
	185	96
[redacted]		
MS35338-162	132	17
	133	43
	165	19
MS35338-40	93	10
	300	32
MS35338-41	107	17
[redacted]		
MS35338-42	59	39
	147	15
	164	4
[redacted]		
MS35338-43	94	35
	97	32
	102	35
	105	37
	142	32
	143	33
MS35338-44	18	13
	33	5
	57	89
	65	16
	65	27
	68	7
	69	2
	70	2
	93	17
	94	82
	95	89
	96	35
	98	55

PART NUMBER	FIG.	ITEM
	99	24
	102	44
	103	87
	104	35
	106	49
	107	10
	110	52
	127	125
	132	9
	142	9
	143	9
	154	62
	173	5
	208	2
	209	2
	233	13
	257	9
[redacted]		
	261	16
[redacted]		
[redacted]		
[redacted]		
[redacted]		
	268	3
[redacted]		
	270	13
	271	37
	274	5
	275	10
	276	3
[redacted]		
[redacted]		
[redacted]		

PART NUMBER	FIG.	ITEM
[redacted]	[redacted]	[redacted]
MS35338-45	59	36
	62	148
	98	25
	99	2
	106	24
	107	2
[redacted]	[redacted]	[redacted]
[redacted]	[redacted]	[redacted]
[redacted]	[redacted]	[redacted]
MS35338-46	15	25
	25	131
	27	25
	28	31
	41	8
	57	7
	93	4
	93	7
	93	24
	95	78
	99	22
	103	79
	107	13
	110	39
	126	39
	129	3
	141	2
	142	5
	143	5
	146	50
	154	50
	173	47
	184	57
	185	64
	186	14
	187	12
	227	17
	233	8
[redacted]	[redacted]	[redacted]
[redacted]	[redacted]	[redacted]
[redacted]	[redacted]	[redacted]
[redacted]	[redacted]	[redacted]
[redacted]	[redacted]	[redacted]
	271	73
	274	52
	275	75
[redacted]	[redacted]	[redacted]
[redacted]	[redacted]	[redacted]
[redacted]	[redacted]	[redacted]
	296	9
MS35338-47	59	3
	60	69
	115	17
	131	19
	158	36
	159	36
MS35338-48	55	30
	57	96
	58	20
	59	8
	165	2
	261	22
[redacted]	[redacted]	[redacted]
[redacted]	[redacted]	[redacted]
MS35338-50	29	34
	30	35

PART NUMBER	FIG.	ITEM
MS35338-63	185	92
MS35338-65	184	11
	185	13
	300	59
MS35338-67	184	14
MS35425-70	18	14
	33	6
MS35425-72	98	24
	106	23
MS35489-105	103	14
MS35489-106	95	31
	103	33
	109	49
MS35489-11	94	59
	102	61
MS35489-110	97	12
	105	27
MS35489-111	117	21
MS35489-113	95	14
MS35489-114	95	32
	103	35
	109	52
MS35489-44	96	4
	104	4
MS35489-48	94	73
MS35489-52	94	61
MS35489-57	81	33
MS35649-202	162	10
	173	30
MS35649-204	25	97
MS35649-2252	27	9
	28	9
	94	65
	97	24
	102	67
	105	14
	106	64
	106	65
	146	1
	155	5
MS35649-2254	133	95
	[redacted]	[redacted]
	[redacted]	[redacted]
MS35649-2312	95	70
	103	71
MS35649-2382	35	4
	312	6
MS35649-2384	2	51
	202	6
	218	19
MS35649-244	236	16
MS35649-262	149	3
MS35649-282	147	16
	155	18
MS35649-284	9	18
	93	29
[redacted]	[redacted]	[redacted]
	[redacted]	[redacted]
MS35650-304	228	21
MS35650-3314	99	51
MS35650-3382	315	6
MS35670-4B	305	39
MS35691-11	130	33
MS35691-13	126	20
	129	32
	243	13

PART NUMBER	FIG.	ITEM
[redacted]	[redacted]	[redacted]
MS35691-17	25	11
	27	38
	28	44
	29	84
	126	53
	181	30
	183	11
	213	21
[redacted]	[redacted]	[redacted]
MS35691-18	123	41
MS35691-19	130	17
	158	39
	159	39
MS35691-21	123	10
MS35691-23	95	84
	110	46
MS35691-29	58	44
MS35691-3	130	24
	133	51
MS35691-33	139	7
	140	7
	190	10
	199	6
MS35691-34	30	13
MS35691-37	132	20
MS35691-39	95	38
	103	38
	103	82
	103	94
	109	57
	110	58
	133	18

PART NUMBER	FIG.	ITEM
MS35691-49	39	75
	40	73
MS35691-5	25	66
	62	271
	235	112
	237	13
	255	58
MS35691-58	14	16
MS35691-61	25	143
	132	11
MS35691-63	133	13
MS35691-7	236	10
	237	21
	255	54
MS35691-95	132	52
	133	69
[redacted]	[redacted]	[redacted]
MS35692-109	16	9
MS35692-65	25	6
MS35756-10	15	31
MS35756-12	123	25
	124	4
MS35756-16	132	42
	133	35
MS35756-3	126	63
	238	60
[redacted]	[redacted]	[redacted]
MS35756-4	143	28
MS35756-6	238	24
MS35764-1202	90	10
	238	5
MS35764-1247	73	5
MS35764-1249	73	51

PART NUMBER	FIG.	ITEM
	86	6
MS35764-1251	58	13
	73	70
	86	27
MS35764-1253	73	61
	86	16
MS35764-1255	73	60
MS35764-1293	137	20
MS35764-1295	90	1
MS35764-1297	90	25
MS35764-1305	90	38
MS35812-2	126	26
	161	28
MS39086-249	257	38
[redacted]	[redacted]	[redacted]
MS45904-60	59	32
	149	7
	210	6
	275	43
MS45904-61	162	67
MS45904-68	98	20
	106	18
	232	21
MS45904-69	99	35
	107	35
	141	25
	162	75
MS45904-70	275	45
MS45904-72	107	51
MS45904-76	94	6
	102	6
	178	9
	179	4

PART NUMBER	FIG.	ITEM
	232	5
	257	20
[redacted]	[redacted]	[redacted]
[redacted]	[redacted]	[redacted]
	300	6
MS45904-84	94	12
	102	12
	130	35
	157	27
MS500083Z060420	132	90
MS500083Z060470	132	91
MS500083Z340090	25	101
MS500083Z340240	25	152
MS51021-113	247	2
MS51021-133	127	34
MS51023-113	129	63
MS51029-133	123	24
MS51029-83	249	19
MS51031-112	282	4
MS51031-120	123	26
MS51073-1	94	26
	102	25
MS51092-1	62	48
MS51095-306L	144	9
MS51095-313	73	36
MS51095-332	228	19
MS51095-336	73	47
MS51095-368L	38	79
MS51106-362	123	6
MS51106-363	123	44
MS51108-66	127	61
MS51412-1	94	86
	96	40

PART NUMBER	FIG.	ITEM
	102	48
	104	40
MS51412-18	242	2
MS51496P79	174	10
MS51500A16	61	5
MS51500A16-12	61	22
MS51500A4	60	61
MS51500A4S	127	41
MS51500A6	154	73
MS51500A6-2	154	59
MS51500B4-4Z	81	47
MS51503A4S	81	41
MS51503A6-6	117	11
MS51504A4	25	61
	60	12
MS51504A4-4	60	59
MS51504B8	57	17
MS51505A4	25	122
MS51507A4Z	81	14
MS51507A6	154	56
MS51508A4-4	60	30
MS51510A4	25	156
MS51513A8	57	22
MS51518B16Z	61	34
MS51521A12	60	35
	117	33
MS51521A16	61	21
MS51521A4	25	55
	60	36
MS51521A6	25	114
	127	35
	132	96
MS51521A8	25	88
MS51522A10	60	10
MS51522A16	61	6
MS51522A24Z	57	110
MS51523A6	133	98
MS51523B12	60	42
MS51525A12	117	15
MS51525A12-16	61	9
MS51525A16	61	37
MS51525A24	57	111
MS51525A6	132	95
MS51527A12	117	8
MS51527A24	57	94
MS51527A6	25	81
	58	16
	154	77
MS51527A8	25	89
MS51528A24	57	106
MS51529A6	25	112
MS51529A6S	132	79
MS51531B3	127	96
MS51531B4S	127	42
	133	128
MS51531B6S	132	81
	133	117
	133	119
MS51533B4S	133	127
MS51534A12-4S	60	38
MS51534A6-4S	132	80
	133	118
MS51607-1	247	15
MS51819-3A	127	9
MS51823-3	133	122
MS51825-3	133	121

PART NUMBER	FIG.	ITEM
MS51830-102		
MS51830-104		
MS51830-104L		
MS51830-108	95	64
	103	63
	109	51
MS51830-108L		
MS51830-202		
MS51830-204L		
MS51831-104	25	25
	74	2
MS51831-208		
MS51833-206-44	73	93
MS51839-3SSA	132	92
	133	130
MS51840-25	154	72
MS51843-6PA	62	136
MS51848-12	324	12
MS51849-121	95	73
	103	74
MS51849-64C	75	28
MS51859-3	149	4
[redacted]	[redacted]	[redacted]
[redacted]	[redacted]	[redacted]
	[redacted]	[redacted]
MS51859-9	186	8
MS51860-53Z	81	13
MS51860-58	60	44
MS51869-12	100	23
	108	24
MS51892-3SSA	132	85
	133	124
MS51896-11	260	5
MS51923-599	251	5
MS51937-8	305	94
MS51955-40	25	10
MS51957-11	241	13
MS51957-12	239	8
MS51957-13	236	21
	241	25
MS51957-15B	241	5
MS51957-27	75	2
MS51957-28	112	5
	247	9
	251	15
MS51957-29	239	11
	240	9
MS51957-2B	174	13
	241	60
MS51957-41	2	14
MS51957-43	311	2
MS51957-61	25	137
	133	61
MS51957-62	235	17
MS51957-63	96	53
	104	52
	236	15
	237	61
MS51957-64	127	40
	234	11
	237	74
MS51957-65	25	118
MS51957-69	234	16
MS51957-81	2	20
MS51958-63B	119	42
MS51958-64	59	68

PART NUMBER	FIG.	ITEM
MS51958-66B	119	13
MS51958-80	119	30
MS51959-28B	174	1
MS51959-3B	241	53
MS51959-44B	241	41
MS51959-63	110	26
MS51959-64	110	25
	110	34
[redacted]	[redacted]	[redacted]
	[redacted]	[redacted]
[redacted]	[redacted]	[redacted]
	[redacted]	[redacted]
MS51961-18	73	29
	86	10
MS51963-105	136	17
MS51963-138	29	40
	30	31
MS51963-154	30	39
MS51964-29	223	20
MS51964-51	75	39
MS51966-130	255	57
MS51966-131	205	8
	237	12
MS51967-14	20	28
	57	77
	190	13
	320	3
MS51967-2	27	39
	28	45
	57	109
	95	88
	103	86
	110	51
	127	126
	208	1
	209	1
	210	26
MS51967-23	308	2
MS51967-8	94	53
	102	52
MS51968-11	115	18
MS51968-2	234	1
MS51968-5	107	52
MS51968-8	127	93
MS51972-5	323	10
MS51975-11	314	15
[redacted]	[redacted]	[redacted]
MS51975-16	38	97
	187	18
MS51975-17	181	54
	[redacted]	[redacted]
[redacted]	[redacted]	[redacted]
[redacted]	[redacted]	[redacted]
MS51975-28	27	50
	28	55
	30	14
MS51975-29	14	1
	123	39
	187	28
MS51975-33	39	73
	40	70
MS51975-38	30	9
MS51977-32	73	25
MS51977-74		
MS51977-97	42	25
	43	32

PART NUMBER	FIG.	ITEM
	44	32
MS51988-3	118	56
MS51988-7	82	23
MS51991-108L	127	60
MS52103Z040055R	81	38
MS52103Z040114R	60	60
MS52103Z040180R	60	75
MS52103Z040200R	81	37
MS52103Z040240R	60	29
MS52103Z041050R	60	14
MS52103Z060120R	154	67
MS52103Z060150P	154	58
MS52103Z060150R	58	17
MS52103Z060260P	154	60
MS52103Z060580R	154	68
MS52103Z100430R	60	9
MS52103Z120080R	60	34
MS52103Z120270R	60	32
MS52103Z120340R	117	9
MS52103Z120480R	60	27
MS52103Z120840R	60	54
MS52103Z121200R	317	2
MS52103Z121340R	117	32
MS52103Z160160R	61	7
MS52103Z160400R	61	36
MS52103Z160750R	61	41
MS52103Z161110R	61	18
MS53001-1	96	6
	104	6
MS87006-23	57	65
MS87006-3	14	8
	21	7
[redacted]		[redacted]

PART NUMBER	FIG.	ITEM
[redacted]		[redacted]
MS91528-1P4B	150	1
MS91528-5N2B	127	44
MS9320-16	235	59
MS9321-07	241	56
MS9321-10	235	19
	237	8
MS9361-13	123	27
MS9379-15	85	12
MS9954-12	55	9
MSD KIT SL/V	325	6
N012-00005	143	14
N012-00038	143	1
N012-03003	142	14
N012-03004	142	1
N012-03015	KITS	2
N012-03029	KITS	3
N0304 2-118	25	78
N220N03CAMNN56301BAA1	109	32
N3-156	142	26
N3-160	142	24
N32-364	143	25
N5000-137H	235	6
N80P19006C6	115	14
N9531	59	16
NAS1081-4A10L	235	110
NAS1081C4D8		
NAS1149C0332R	12	14
	127	71
[redacted]	[redacted]	[redacted]
[redacted]	[redacted]	[redacted]
NAS1149C0663R	100	30
	108	28

PART NUMBER	FIG.	ITEM
	109	3
	193	16
	194	19
	235	72
[redacted]	[redacted]	[redacted]
NAS1149C0863R	133	19
NAS1149C1032R	132	56
	133	73
NAS1149C1432R	96	31
NAS1149D0432J	119	3
NAS1149D0863K	27	52
	28	57
NAS1149E0363R	130	1
NAS1149E0432R	98	38
	106	37
NAS1149E0663R	95	86
	103	84
	110	48
NAS1149E1032R	126	45
NAS1149EN632R	95	55
	103	51
	109	73
	110	44
NAS1149EN832R	95	39
	103	39
	103	96
	109	59
	110	60
NAS1149F0363P	27	54
	28	59
	33	2
	99	44
	107	44
	147	10
NAS1149F0432P	271	59
NAS1149F0463P	33	4
	62	270
	63	5
	146	55
	210	25
	231	7
	275	61
NAS1149F0563P	58	42
	126	22
	129	34
[redacted]	[redacted]	[redacted]
NAS1149F0663P	22	6
	84	14
	123	3
	141	42
	[redacted]	[redacted]
NAS1149F0732P	126	56
	129	27
[redacted]	[redacted]	[redacted]
[redacted]	[redacted]	[redacted]
	[redacted]	[redacted]
NAS1149F1432P	15	34
NAS1149F2190P	31	46
NAS1190C04P5L	240	10
NAS1190E3R8	99	31
	107	21
NAS1297-4H9	25	165
NAS1297-6-6	167	1
NAS1329S4E-260	180	2
NAS1351-08LL12P	257	35

PART NUMBER	FIG.	ITEM
NAS1351-3LE16P/ EXCLUDING PEL	257	29
NAS1351-3LL12	255	9
NAS1351-7-28	123	29
NAS1351C3-12	75	42
NAS1351C4LL12	145	2
NAS1351N3H12		
NAS1351N3H30		
NAS1351N4-16		
NAS1351N4-28		
NAS1351N4H10		
NAS1351N4H12		
NAS1352-04-6	223	27
NAS1352-06LL6P	237	69
NAS1352-08LL10P	235	11
NAS1352-08LL12	[redacted]	[redacted]
	[redacted]	[redacted]
NAS1352-08LL12P	238	42
	255	23
NAS1352-08LL8P	235	15
NAS1352-10	223	21
NAS1352-3LL8P	238	20
NAS1352-4-10P	271	36
NAS1352-4-12P	213	2
NAS1352-4LE12P	255	26
NAS1352-4LE20P	238	3
NAS1352-4LL14P	237	24
NAS1352-6-16P	21	10
	213	17
	[redacted]	[redacted]
NAS1352-6-20P	18	17
	324	13
NAS1352C06-6	172	20
NAS1352C08-6	75	12
NAS1352C3-12	97	31
NAS1352C4-8	75	23
NAS1352N04-12		
NAS1352N08H6		
NAS1396-10-5	202	12
NAS1454C6A-0200	179	34
NAS1523-8Y	73	65
	86	20
NAS1523C10E	235	58
NAS1715C13KH	132	10
	133	10
	173	42
NAS1715C24KH	162	66
NAS1715C32KH	94	25
	102	30
NAS1715D16NH	59	87
NAS1715D20NH	272	63
	278	63
NAS1715D28NH	57	102
[redacted]	[redacted]	[redacted]
[redacted]	[redacted]	[redacted]
	[redacted]	[redacted]
	[redacted]	[redacted]
	[redacted]	[redacted]
	[redacted]	[redacted]
[redacted]	[redacted]	[redacted]
NAS3104C9-10	227	14
NAS3106C28-22	227	15
NAS397-18	162	20
NAS43DD4-56N	209	19
NAS43DD4-96N	94	28
	102	27

PART NUMBER	FIG.	ITEM
NAS43DD8-56N	132	31
	133	21
NAS43HT6-16	141	38
NAS43HT6-60	135	17
NAS43HT6-60A	136	7
NAS509-10C		
NAS509-3C		
NAS509-6	229	12
NAS51-18	237	48
NAS558-806-12	73	54
	86	34
NAS561C4-24	201	18
NAS561P6-12	127	84
	186	9
	215	3
NAS607-6-8P	230	1
NAS620C10	75	27
	101	3
NAS620C10L		
NAS620C416	75	24
	244	4
	[redacted]	[redacted]
	[redacted]	[redacted]
NAS620C6	75	3
	112	3
	260	7
NAS620C6L	251	9
NAS620C8	75	13
	[redacted]	[redacted]
	[redacted]	[redacted]
NAS620C8L		
NAS6604L9	270	4
	274	9

PART NUMBER	FIG.	ITEM
NAS6608H22	55	26
NAS671C6	112	16
NAS831-18	100	73
NAS837-10	100	69
[redacted]	[redacted]	[redacted]
NASM16555-45	237	41
NTB206620R	328	1
NX307AB1B-00	241	16
P52-2776	81	20
PE-960015-1	112	9
PR-1422 B2	118	73
PT375125	172	48
R110D	305	69
R1114W	305	66
R112D	305	67
R113D	305	72
R206D	305	68
R210D	305	61
REB10021-29	94	40
	102	40
RJ913SB18L	18	7
RK10173	156	4
RR-C-271D TY 4A GR A CL 2	305	84
RR-C-271DTY4AGRACL2	318	1
RS40-7	38	10
S-145-C	63	14
S-50BZ	25	79
S0001170	62	41
S00093400	62	246
S107A	62	150
S126	62	43
S130A	62	298
S155	62	50

PART NUMBER	FIG.	ITEM
S159B	62	263
S167CHZ	305	51
S174C	63	7
S223	62	152
S256022-151	216	1
S257009-151	217	2
S257009-152	216	2
S257010-151	217	3
S257010-152	216	3
S258004-151	216	4
S258004-152	217	4
S259008-051	KITS	4
S2902	62	57
S603	62	227
S603A	62	329
S604	62	18
S606A	64	5
S607	62	240
S610	62	26
S626	62	147
S767004-151	219	1
S768003-151	219	2
S955	62	330
S967	62	186
S9901Z-G404-03	257	11
SA910070	KITS	5
SAE J1453-3 6-6 520220CA	133	100
SAE J512 4-2 010302BA	62	117
SAE J512 6-4 010202BA	62	223
SAE J514 4-4 070120S	25	65
SAE-AS25042-12DW	141	23
SAE-J514-6-6-270179SA	127	8
SCP1600 ASM	300	51
SHC-1032	94	15
	102	15
SM-A-680088-24	235	21
	237	72
SM-A-680088-25	BULK	25
	BULK	44
	BULK	45
	BULK	53
	BULK	54
	BULK	40
	BULK	49
	BULK	50
	BULK	47
SM-C-774995	325	10
SMB006-0200-9	271	38
	275	41
SP-06321	319	79
SRC1852A	300	13
SS3698-52	174	5
ST-1159	319	76
ST-1166	319	34
ST-1243	319	29
ST-257	319	37
ST-658	319	53
ST-663	319	39
ST-800	319	41
ST0116100	319	66
ST1108	305	47
ST1179	319	47
ST1202-1	319	32
ST1227	319	33
ST1279-1	319	38
ST302	319	59

PART NUMBER	FIG.	ITEM
ST537	319	43
ST560	319	46
ST561	319	49
ST662	319	52
ST669	305	57
ST862	319	51
ST874	319	63
ST880	319	48
ST884	319	44
STD405-64	241	39
STD835-2	241	52
STD902-1	241	59
T22-AB-3	127	108
T436XRL-4	319	72
TK-105A/G	325	13
TMP22E	305	41
TP529	305	7
TYV/CL2/TR C1	247	16
V-35AFKM	172	68
VCD7X00-P000R	300	43
W211NAA0025NN421NNAB1	187	20
W211NAC0025NN155NNNF1	282	16
W212NAA0060NN041NNCG1	102	82
WHW-237	75	37
WW-P-471ACABDC	57	40
[redacted]	[redacted]	[redacted]
X825	319	50
Y627	305	3
004-003005-059	209	15
	261	29
012-00033	142	7
012-03017-302	142	19
	143	19

PART NUMBER	FIG.	ITEM
013-1981-020	30	11
	211	2
017930100	62	35
02-2801176-1	173	33
021328900	62	105
025108100S	60	19
025518000S	62	59
03087876	87	1
04.0607.0010	133	93
041979B-00	174	4
041980B-00	174	3
041982B-00	174	9
1-4-1-8PTRSS	81	48
10-305033-003	326	10
10-553-310-139	257	18
1000613-101	93	13
10009685	38	128
100328	62	112
10040002	205	3
10050100	62	142
1005494	175	2
10060S	57	59
	154	14
100PL3	99	21
	107	30
101476	62	210
10160197	117	68
10165079	137	22
10167C	300	62
10168C	300	61
1018393	318	4
10190635-10	165	17
10190635-2	130	18

PART NUMBER	FIG.	ITEM
	165	15
10190635-5	165	13
10190635-6	165	12
1023	319	9
10280888-2	231	8
10300650-1	19	6
10325-2	122	3
10325-4	122	2
10393773-010	201	3
[redacted]	[redacted]	[redacted]
[redacted]	[redacted]	[redacted]
10478800	62	229
104942	61	30
10516567	247	5
105651	94	1
	102	1
10576	122	4
10583	KITS	6
10586	122	1
10692258	244	8
10724	122	5
107460	62	201
1081-51	147	7
10861259	29	70
10861293	117	67
10861387-2	12	19
10861777	50	1
10863380	52	5
	181	2
10863495	143	27
10863497	142	17
	143	17
10863498	142	6

PART NUMBER	FIG.	ITEM
	143	6
10865525	142	3
	143	3
10865526	142	8
	143	8
10865529	142	2
	143	2
10865863	201	4
10865866	201	17
10865868	201	16
10865873	201	5
10866008	201	13
10866118	46	5
	51	5
10866218	143	10
10866352	200	1
108722	62	184
10874799	29	82
10875319	181	45
	182	23
10875320	181	63
	182	20
10875414	161	1
10886192	172	52
10886459	141	26
10886500	191	8
10886769	127	22
10890799	113	3
10890814	201	19
10902595	BULK	5
10908077	201	14
10910174-1	58	39
	73	21

PART NUMBER	FIG.	ITEM
	86	5
	90	9
	123	5
	135	11
	136	3
	170	24
	171	20
	181	65
	182	8
	183	2
	190	36
	202	4
	227	12
	233	17
	243	25
	270	8
	274	13
	[redacted]	[redacted]
10910174-10	29	30
10910174-15	39	86
	40	2
10910174-16	27	20
	28	19
	29	12
	34	12
	38	64
	40	19
	41	4
	60	21
	61	28
	81	44
	83	4
	121	10
	132	65
	133	82
	177	11
	179	48
	188	9
	190	30
	300	16
10910174-17	181	53
10910174-19	110	3
10910174-2	58	12
	73	4
	86	7
	110	6
	113	7
	179	39
	200	16
10910174-20	12	5
	25	73
	27	47
	28	58
	29	25
	98	57
	106	60
	127	62
	129	40
	162	29
	183	7
	184	6
	185	6
	193	3
	194	3
	211	15
	300	24

PART NUMBER	FIG.	ITEM
10910174-22	22	12
	25	71
	29	48
	38	48
	40	7
	109	38
	129	2
	132	44
	133	31
	135	2
	136	8
	145	12
	146	20
	154	42
	158	16
	159	17
	161	16
	173	44
	177	9
	181	11
	181	11
	182	5
	184	34
	185	42
	190	40
	194	9
	197	8
	198	9
	227	49
	233	19
10910174-23	17	2
	18	5
	29	7
	31	2
	38	38
	146	49
	184	2
	185	2
	300	54
10910174-24	30	38
	182	18
	182	18
10910174-25	42	21
	43	27
	44	27
10910174-28	20	3
	31	5
	81	43
	157	3
	158	4
	159	4
	184	92
	185	108
	193	36
	194	39
	[redacted]	[redacted]
10910174-29	2	31
10910174-3	25	52
	28	29
	29	51
	31	42
	38	41
	39	69
	40	68
	46	2
	51	2

PART NUMBER	FIG.	ITEM
	52	23
	53	2
	57	82
	58	6
	60	50
	82	6
	94	57
	102	55
	109	27
	119	57
	123	13
	127	55
	129	60
	132	14
	133	54
	136	20
	161	5
	170	4
	171	16
	179	21
	181	4
	184	45
	185	84
	188	11
	193	21
	194	25
	204	2
	211	9
	227	10
	243	2
	[redacted]	[redacted]
	[redacted]	[redacted]
	[redacted]	[redacted]

PART NUMBER	FIG.	ITEM
	[redacted]	[redacted]
	[redacted]	[redacted]
	[redacted]	[redacted]
	296	8
	315	7
10910174-30	25	139
	27	14
	27	51
	28	14
	28	56
	38	73
	109	31
	158	8
	159	8
	181	16
	182	21
	296	5
10910174-31	25	163
	30	40
	40	36
	133	37
	182	14
	190	24
10910174-33	90	26
	92	4
10910174-34	18	12
	25	84
	27	36
	28	42
	106	68
	121	6
	179	15
	181	50

PART NUMBER	FIG.	ITEM
	300	19
10910174-38	18	15
	25	14
	29	17
	31	49
	34	13
	40	29
	42	20
	43	26
	44	26
	182	16
	182	16
	184	59
	185	66
	261	30
10910174-4	29	58
	58	23
	59	4
	60	66
	61	25
	94	9
	102	9
	131	20
10910174-40	20	12
	183	8
10910174-41	38	11
10910174-5	15	7
	20	8
	23	3
	25	32
	29	67
	30	5
	31	16
	34	9
	38	6
	55	29
	57	31
	58	29
	94	7
	98	41
	102	7
	106	41
	119	52
	132	19
	133	27
	157	30
	158	40
	159	25
	162	54
	165	3
	173	17
	184	31
	185	15
	185	32
	190	9
	193	34
	194	37
	199	9
	200	12
	206	8
	222	8
	[redacted]	[redacted]
	296	22
10910174-6	29	10
	132	24
	133	7

PART NUMBER	FIG.	ITEM
10910174-7	17	8
	29	18
	30	17
	30	17
	34	4
	39	82
	40	38
	42	6
	43	6
	44	6
	55	4
	57	42
	185	9
10910174-8	29	5
	30	17
	184	96
	185	113
10917437	94	39
	102	39
10917666	305	56
10930015	177	18
10932560	12	18
10940477	22	4
	38	76
	193	13
	193	23
	194	16
	194	27
[redacted]	[redacted]	[redacted]
	[redacted]	[redacted]
	[redacted]	[redacted]
10941915-6	25	29
	25	49
	29	3
	30	15
	38	57
	41	22
	184	23
	184	23
	185	23
	185	23
	193	33
	194	36
10942521	95	26
	103	26
[redacted]	[redacted]	[redacted]
[redacted]	[redacted]	[redacted]
10942750-1	95	3
	103	3
10947291-11	1	1
	25	24
	25	26
	40	33
	305	71
10947291-12	15	3
	15	11
	177	16
	185	99
10947291-13	1	3
10947291-3	1	2
	305	70
10947291-4	117	58
	118	4
	119	58
10947291-7	305	60
109594	62	81

PART NUMBER	FIG.	ITEM
11005	319	16
1110012-101	179	45
1110012-103	179	44
111365	62	176
11145-34	62	76
112-000006-010	179	45
112-000006-014	179	44
112105	62	214
1129533	[redacted]	[redacted]
	305	79
1129535	305	82
11436296-1	314	10
11589476	115	13
11589477-1	94	16
	102	16
116-32348	87	3
11602713	59	34
11614157	94	63
	102	65
11627514	68	4
11627524	60	37
	65	36
11627748-6	235	82
	256	11
11627873	305	54
11628177	68	1
11628246	65	29
	69	3
	235	117
11628295	65	24
11628332-1	65	39
11628916	68	3
11628986	65	13

PART NUMBER	FIG.	ITEM
11629102-1	68	5
11629107	72	4
11629108-1	72	5
11629109	72	1
11629111	72	3
11629193	65	12
11629376	65	34
11629446	65	7
11629460	65	1
11629549	65	21
11629619	65	30
	69	7
	70	5
	235	109
11629632	65	4
	71	2
11629671	305	55
11629715	65	31
	69	6
	70	6
	235	39
11629820	65	22
11639519-1	116	2
11639519-2	111	2
11639520	111	3
11639535	111	1
11639541	116	3
11639546	116	1
11640203	25	108
11662931	59	57
11662995	BULK	10
11662995-1	BULK	11
11662995-2	BULK	12

PART NUMBER	FIG.	ITEM
11662995-3	BULK	13
11662995-4	BULK	14
11662995-5	BULK	15
11668612-1	60	86
11669182	57	55
11669203	61	23
11669268	83	2
11669395-32	82	22
11669395-4	82	9
11669395-43	82	10
11669395-44	82	11
11669395-5	82	19
11669395-53	82	20
11669450	52	26
11669705	155	22
1168	305	2
11693600	62	221
11728227	305	103
11737597	247	6
118346	62	182
118347	62	219
119581-3-PY	138	56
119582-19-06-PY	138	46
119583-44-28-PY	138	36
119584-05-02-PY	138	51
119592-09-08-FPY	138	32
12-12 140130C	117	31
12122900	62	185
12258956	305	32
12265523	158	57
12265593	242	6
12266903	248	1
12266917	248	4
12266940-3	248	2
12266940-6	245	2
12266965	248	3
12266966	248	6
12266973	249	16
12266974	245	3
12266975	245	1
122702-1	138	13
122706-1	138	50
122710-1	138	22
122711-1	138	3
122728-1	138	35
122736-1	138	39
122737-1	138	41
122738-1	138	45
122739-1	138	38
122740-1	138	10
122741-1	138	17
122742-1	138	59
122743-1	138	11
122744-1	138	48
122745-1	138	6
122746-1	138	42
122747-1	138	43
122748-1	138	53
122749-1	138	61
122750-1	138	60
122751-1	138	57
122752-1	138	31
122753-1	138	25
122754-1	138	2
122760-1	138	30
122763-1	138	9

PART NUMBER	FIG.	ITEM
12276462-1	221	12
122766-1	138	54
12276657	52	10
12276658	215	5
12276665	223	6
12276673	73	58
	86	13
122767-1	138	26
12276701	227	43
12276729	215	6
122773-1	138	27
122774-1	138	34
122778-1	138	29
12278975	249	20
12279236	245	6
12279248-2	246	19
	251	21
12279262	245	5
12279263	245	7
12279267	249	13
[redacted]	[redacted]	[redacted]
	[redacted]	[redacted]
122823-1	138	1
12282452	305	37
12285280	125	12
12291954	42	4
	43	4
	44	4
12292009	73	76
	86	33
12292029	223	4
12292058	203	1
12292059	51	8

PART NUMBER	FIG.	ITEM
12292075	221	14
12292099	146	45
12292104	141	30
12292104-1	141	30
12292104-2	141	30
12292113	146	12
12292197	239	16
	240	5
12292327	238	84
12292330	238	67
12292333	238	70
12292344	253	6
12292348	233	12
12292349	233	20
12292353	255	74
12292354	238	39
12292359	255	10
12292360	238	80
12292362	238	78
12292363	238	9
12292364	238	10
12292365	238	25
12292366	238	69
12292367	238	52
12292370	255	32
12292372	255	38
12292373	255	76
12292374	255	94
12292376	81	19
	239	10
12292377	237	11
12292379	240	8
12292381	235	44

PART NUMBER	FIG.	ITEM
12292384	235	108
12292385	235	73
12292393	235	37
12292394	235	22
12292395	235	51
12292400	234	17
	254	10
12292400-1	234	17
	254	10
12292400-5	234	17
	254	10
12292403	256	6
12292406	255	33
12292410	237	35
12292411	235	95
	237	3
	255	86
12292412	255	67
12292413	81	36
	239	1
12292414	240	4
12292415	235	116
12292417	237	9
12292418	255	73
12292419-1	238	49
12292419-2	235	102
12292420-1	235	16
12292420-2	235	1
12292420-4	237	65
12292420-5	238	32
12292421	237	29
	255	53
12292424	235	118

PART NUMBER	FIG.	ITEM
12292425	255	55
12292426	238	79
12292427	238	63
12292428	255	84
12292429	319	22
12292431	238	4
12292432	238	41
	255	40
12292433	238	2
	255	22
12292434	238	19
12292435	237	22
12292437-1	237	71
12292438	237	42
12292439	236	20
12292440	236	4
12292441	236	5
12292442	238	47
12292443	255	42
12292444	238	8
12292447	255	77
12292448	255	96
12292451	255	68
12292453	235	67
12292454	235	104
12292455	235	3
12292456	235	5
12292458	235	28
12292459	236	11
12292460-1	238	75
12292460-3	238	6
12292461	238	11
12292462	237	75

PART NUMBER	FIG.	ITEM
12292463	238	48
12292464-1	237	43
12292465	238	72
12292466	237	54
12292467-1	237	44
12292469-1	235	43
12292469-2	235	29
12292469-3	235	24
12292469-4	237	60
12292470	235	115
12292471	235	65
	255	5
12292472	235	9
12292473	234	14
12292477	238	46
	255	39
12292480	254	9
12292481	235	30
12292483	255	43
12292484	235	86
12292486	235	85
12292487-1	235	45
12292487-2	69	1
	235	47
12292489	237	68
12292490-1	237	49
12292491	237	52
12292492	237	50
12292493	235	97
	237	1
	255	92
12292494	237	47
12292495	237	70
12292500	237	19
12292501	237	5
12292502	237	4
	255	90
12292508-2	255	34
12292508-3	255	79
12292508-4	255	2
12292514	255	60
12292515	255	89
12292519	235	31
	237	63
12292520	255	25
12292531	255	50
12292533	133	137
	235	34
	237	73
12292536-1	235	33
12292542	236	24
12292543	234	12
12292544	236	19
12292547	239	13
12292548	81	29
	239	15
12292549	81	3
	239	9
12292550	240	7
12292551	240	12
12292552-1	81	53
	239	7
	240	6
12292552-2	240	13
12292553	319	21
12292554	319	10

PART NUMBER	FIG.	ITEM
12292555	235	54
12292556	235	57
12292558	237	57
12292559	237	58
12292569	239	14
12292576	238	59
12292587	321	4
12292588	236	12
12292590	254	2
12292592-11	319	1
12292592-12	319	1
12292592-13	319	1
12292592-2	319	1
12292592-3	319	1
12292592-5	319	1
12292592-6	319	1
12292592-7	319	1
12292592-8	319	1
12292592-9	319	1
12292593-1	319	2
12292593-10	319	2
12292593-11	319	2
12292593-12	319	2
12292593-3	319	2
12292593-4	319	2
12292593-7	319	2
12292593-8	319	2
12292594-1	319	5
12292594-10	319	5
12292594-11	319	5
12292594-12	319	5
12292594-13	319	5
12292594-14	319	5

PART NUMBER	FIG.	ITEM
12292594-15	319	5
12292594-4	319	5
12292594-5	319	5
12292594-6	319	5
12292594-7	319	5
12292595-1	319	4
12292595-2	319	4
12292597	319	6
12292598	319	14
12292599-1	235	56
12292607	319	12
12292608	305	87
12292609	235	75
12292610-1	319	3
12292610-2	319	3
12292610-3	319	3
12292610-4	319	3
12292611-1	319	15
12292611-4	319	15
12292611-5	319	15
12292615	255	7
12292616	235	12
12292621	319	25
12292622	319	26
12292623	319	27
12292630	322	5
12292631	322	4
12292632	322	1
12292633	323	5
12292634	323	6
12292635	321	2
	322	3
	323	1

PART NUMBER	FIG.	ITEM
12292636	323	11
12292638	323	14
12292639	323	13
12292643	322	2
12292644	323	7
12292647	321	1
12292648	324	7
12292649	324	3
12292658	319	11
12292659	324	14
12292660	324	1
12292661	324	9
12292663	321	3
12292665	319	17
12292670	238	16
12292671	238	26
12292672	235	111
12292673	237	14
12292729	81	52
	239	3
	240	3
12292740	319	23
12292755	319	19
12292783	235	14
	238	37
	255	70
12292784-4	238	1
	255	24
12292794-1	237	37
	255	64
12292794-2	237	25
12292794-3	235	89
12292796-1	235	80
12292796-2	235	100
	237	34
12292801	255	6
12292801-1	235	64
12292803-11	272	9
	278	12
12292803-13	272	8
	278	11
12292803-4	272	1
	278	1
12292803-5	272	2
	278	2
12292811	238	23
12292832-1	238	65
12292832-2	255	49
12292833-1	255	35
12292833-2	235	61
12292834-1	235	105
12292834-3	235	36
12292835-1	235	62
12292835-2	238	68
	255	29
12292836	235	35
12292845-1	255	37
12292845-2	255	27
12292845-3	255	17
12292845-4	255	14
12292860-1	237	32
12292860-23	81	22
	239	4
12292860-26	235	78
12292860-27	256	1

PART NUMBER	FIG.	ITEM
12292860-6	240	1
12292863	236	18
12292874-1	319	18
12292874-2	324	8
12292874-3	319	20
12292876-3	235	20
12292876-5	255	63
12292876-6	255	48
12292899	235	84
12292902	235	107
12292904-3	255	83
12292904-4	235	7
12292904-5	255	19
12292904-6	255	12
12292904-7	235	87
12292905-1	255	78
12292905-2	238	74
	255	93
12292905-3	235	66
12292905-4	235	27
12292905-6	324	5
12292906-1	238	21
12292906-2	237	46
	238	29
	255	45
12292906-3	238	43
	255	41
12292906-4	235	50
12292906-5	238	77
12292906-6	255	3
12292906-7	235	70
12292908	235	60
12292915	324	11
12292916	319	28
12292923	235	52
12292924	255	36
12293005-1	59	47
12293005-2	59	11
12293005-3	146	63
12293013	118	42
12293014	73	22
12293017	120	8
	121	3
12293020	120	1
	121	5
12293039	120	9
12293040	120	4
12293043-1	[redacted]	[redacted]
	305	78
12293048	95	60
	103	56
	110	20
	157	13
12293050	305	15
12293059-16	158	47
12293059-2	95	57
	103	59
	110	23
	157	16
12293059-26	170	2
12293059-27	158	51
12293059-3	95	59
	103	57
	110	21
	157	17
12293066	73	74

PART NUMBER	FIG.	ITEM
	86	31
12293069	73	73
	86	29
12293100-1	38	78
12293100-2	38	80
12293104	169	12
12293110	82	4
12293114	146	16
12293126	118	7
	119	70
12293129	233	15
12293130	233	11
12293171	271	12
	275	13
12293172-3	132	89
12293172-4	132	83
12293205	42	17
12293208	42	38
12293242	90	7
12293255	9	4
	95	20
	103	20
	160	10
12293273	97	22
	105	31
	275	21
12293273-1	107	55
	157	24
12293273-11	155	20
12293273-2	162	31
12293273-8	146	3
12293275	97	27
	105	17
12293275-4	94	66
	102	68
12293287-34	311	4
12293668-3		
12293668-4		
12293699		
[redacted]	[redacted]	[redacted]
12294196-1		
12294196-2		
12294197		
12294201	223	15
12294204	221	11
12294205	223	1
12294243	37	1
12294309	90	4
12294310	90	17
12294324	215	2
12294330-1	95	61
	103	60
	110	19
	157	18
12294330-15	166	1
12294330-2	157	7
	290	5
	[redacted]	[redacted]
12294330-22	169	9
12294330-4	158	55
	159	49
12294330-5	95	58
	103	58
	110	22
12294331-2	157	2
12294340	215	1

PART NUMBER	FIG.	ITEM
12294343	228	4
12294384	227	50
12294388	187	7
12294396	73	41
12294398	73	35
12294404	90	39
12294408	213	13
12294450	227	25
12294459	199	17
	200	3
12294460-1	199	5
12294460-2	200	19
12294469	90	22
12294475	35	3
12294478	182	31
12294481	224	3
12294483	181	61
12294484	224	5
12294488	221	2
12294490	221	7
12294491	221	15
12294494	182	48
12294495	199	12
12294497	181	62
	182	19
12294502	223	12
12294508	199	22
12294509	229	10
12294510	229	2
12294511	229	1
12294516	229	5
12294517	182	17
12294521	229	3
12294523	117	69
12294529-3	151	5
	153	8
12294529-4	152	3
	153	6
	153	16
12294530	146	37
12294531	96	21
	104	21
12294532	96	22
	104	22
12294537	181	1
12294538	181	43
	182	32
12294539	227	8
12294540	305	76
12294550	27	45
	28	51
12294556	212	6
12294560	21	5
12294561	21	4
12294562	21	1
	201	20
12294605	39	22
	40	50
12294607-1	182	49
12294607-2	182	50
12294608-1	181	18
12294608-2	181	19
12294610	223	16
12294631	90	3
12294632	90	16
12294634	73	55

PART NUMBER	FIG.	ITEM
12294635	73	53
	86	35
12294643	90	28
12294644	90	11
12294646	86	9
12294652	153	19
12294653	153	20
12294709	73	102
12294710	73	80
	86	40
12294712	73	101
12294713	74	4
12294714	74	1
12294717-1	73	68
	86	23
12294724-1	141	11
12294724-2	141	53
12294751	117	55
	118	16
12294759	73	83
	86	25
12294760	73	89
	86	41
12294762	73	57
	86	37
12294765	73	103
12294766	73	39
12294768-1	227	18
12294768-2	227	2
12294769	227	23
12294770	227	3
12294771	73	48
12294774	73	23
12294777	215	4
12294778	213	3
12294791-8	73	34
12294804	177	1
12294807	73	49
	86	3
12294808-1	73	50
	86	2
12294815	117	53
12294823	207	7
12294825	95	12
	103	12
12294831	135	5
12294832	95	1
	103	1
12294833	207	8
12294834	62	307
12294836	150	5
12294837	178	10
	179	5
	232	4
12294867	146	42
12294872	83	11
12294873	73	81
12294881	61	1
12294886	23	1
12294902	73	24
12294934-1	55	18
12294972	144	1
12294979	90	6
12294982	[redacted]	[redacted]
	[redacted]	[redacted]
12294985	214	3

PART NUMBER	FIG.	ITEM
	218	14
12294992	73	66
	86	21
12295017	58	33
12295021	191	19
12295023	100	2
	108	2
12295031	139	24
	140	12
12295036	137	9
12295037	139	18
12295042	139	6
	140	6
12295082-3	268	17
	271	23
	275	27
	276	18
12295084	182	44
12295085	137	14
12295086	137	24
12295087	137	30
12295088	137	18
12295089	137	16
12295092	137	29
12295094	227	4
12295096	172	11
12295107	213	15
12295117	31	43
12295121	137	2
12295122	21	3
	201	6
12295126	199	31
12295129	29	65

PART NUMBER	FIG.	ITEM
	30	12
	31	44
12295143	227	29
	227	41
12295147	139	15
12295151	135	1
12295163	146	40
12295165	305	74
12295186	227	45
12295187-1	227	47
12295187-2	227	46
12295193	12	3
12295198	199	23
12295200	178	11
	179	6
12295201	137	17
12295202	205	13
12295207	213	29
12295224	213	19
12295225	213	28
12295226	213	30
12295228	213	24
12295242	186	10
12295248	213	23
12295270	15	14
12295271	15	17
12295273	73	7
12295277	42	1
12295282	53	8
12295282-1	53	10
12295283	53	12
12295284	42	16
	43	21

PART NUMBER	FIG.	ITEM
	44	21
12295286	53	25
12295287	54	3
12295289	47	4
12295290	51	11
12295293	42	42
	43	20
	44	20
12295294	50	3
12295295	42	43
	43	16
	44	16
12295459-1	55	16
12295470	38	28
12295471	38	26
12295491	192	1
12295542-2	53	9
12295542-3	52	15
12295551	53	19
12295552	47	2
	54	5
12295554-1	90	24
12295554-4	86	12
12295554-5	52	2
12295554-7	73	69
	86	24
12295566	305	17
12295586	221	10
12295593	KITS	7
12295594	21	2
	201	1
[redacted]	[redacted]	[redacted]
12295605	94	21

PART NUMBER	FIG.	ITEM
	102	21
12295606	62	45
12295606-1	59	33
12295607	191	9
12295610	58	32
12295611	57	5
12295619	312	13
12295620	312	4
12295636-9	228	5
12295638	214	4
12295639	214	1
12295643	231	1
12295644	231	3
12295645	231	9
12295646	231	6
12295647	231	5
12295648	228	20
12295652	227	54
12295657	229	11
12295727	312	1
12295727-1	326	21
12295729	15	10
12295730	312	8
12295738	312	9
12295744-2	192	3
12295898		
[redacted]	[redacted]	[redacted]
12295912		
12295913		
[redacted]	[redacted]	[redacted]
12295919		
12295937		
[redacted]	[redacted]	[redacted]

PART NUMBER	FIG.	ITEM
[redacted]	[redacted]	[redacted]
[redacted]	[redacted]	[redacted]
[redacted]	[redacted]	[redacted]
[redacted]	[redacted]	[redacted]
12296056		
12296063		
12296701	15	9
12296702	15	1
12296709	73	2
12296710	46	10
	51	10
12296711	73	90
12296712	73	1
12296715	52	12
12296720	82	17
12296722-1	46	9
	51	9
12296726	92	8
12296727	25	133
	141	5
12296730	29	66
12296736-1	127	37
12296752	19	5
12296757	57	3
12296762	73	92
12296763	137	1
12296765	53	21
12296766-2	42	36
	43	37
	44	37
12296766-3	47	1
	54	6
12296768	90	34
12296772	81	30
12296776	139	32
	140	20
12296777	139	5
	140	5
12296778	139	2
	140	2
12296779	139	29
	140	17
12296785	132	60
	133	77
12296792	168	8
12296802	60	5
	61	13
12296806	98	3
	106	3
12296807	55	6
12296819	73	9
12296820	73	13
12296821	73	16
12296835	94	42
	102	42
12296836	94	41
	102	41
12296839	96	1
	104	1
12296840	132	59
	133	76
12296843	73	11
12296844	73	10
12296845-2	59	27
	60	65
12296845-3	60	67

PART NUMBER	FIG.	ITEM
	61	42
12296845-4	14	15
12296846	49	2
12296848	15	12
12296850	60	26
12296853	205	4
12296854	205	7
12296855	205	11
12296863-1	22	8
	193	17
	194	20
12296863-2	22	10
	193	19
	194	21
12296868	73	18
12296869	73	15
12296871	59	18
12296879	53	6
12296880	42	41
	43	17
	44	17
12296885	73	12
12296895	15	55
12296898	60	28
12296899	35	2
12296901	137	3
12296902	126	14
12296903	117	7
12296903-1	117	7
12296906	59	31
12296920	42	24
	43	30
	44	30
12296921	42	23
	43	29
	44	29
12296922	53	3
12296924-1	53	15
12296924-2	53	13
12296924-3	52	9
12296924-4	52	11
12296926	46	3
	51	3
	52	22
12296927	53	18
12296928	46	8
12296929	42	15
	43	15
	44	15
12296930	42	44
	43	18
	44	18
12296931-1	42	26
	43	35
12296931-2	42	48
	43	49
12296934	42	46
	43	31
	44	31
12296935	52	14
12296935-1	52	16
12296942	42	29
	43	41
	44	41
12296944-1	57	66
12296945	57	85

PART NUMBER	FIG.	ITEM
12296946	57	67
12296949	58	31
12296951	82	24
12296954	58	27
12296956	305	9
12296957	305	14
12296960-1	55	32
12296960-2	55	28
12296961-1	58	49
12296961-2	58	46
12296964	57	69
12296971	57	60
12296974	57	56
12296977	18	1
12296984	57	78
12296990	25	27
12296992	61	24
12296993	60	23
12296994	60	47
12297003	117	38
	317	3
12297003-1	317	1
12297003-3	60	45
12297003-6	117	34
12297003-7	60	40
12297008	60	46
12297009	60	11
12297010	19	2
12297011	19	10
12297027	46	11
12297032	53	11
12297046	55	15
12297066	57	84
12297074	129	5
12297080	129	1
12297096	141	7
12297097	141	8
12297098	141	4
12297099	141	19
12297105	126	41
12297109	141	3
12297114	132	7
	133	42
12297123-1	117	66
12297123-2	117	70
12297137	126	59
12297138	126	12
12297148	126	44
12297174	21	8
	201	8
12297212	118	41
12297214	117	50
12297216	117	49
12297217	117	48
12297218	117	45
12297219	117	59
12297220	117	57
12297222	117	73
12297223	117	63
12297224	118	22
12297238	118	18
12297239	118	26
12297251	7	2
12297282-2	27	18
	28	18
12297282-9	27	23

PART NUMBER	FIG.	ITEM
	28	34
12297290	31	41
12297322	151	9
12297322-13	152	1
12297322-24	152	6
12297322-7	152	5
12297322-8	152	2
12297325	146	57
12297325-1	146	58
12297326	154	6
12297330	38	129
12297334	38	131
12297338	38	95
12297339	38	110
12297352	118	3
	119	77
12297353	57	64
12297362	275	22
12297367-4	137	5
12297367-5	199	25
	200	30
12297377	29	63
12297378	29	62
12297381	155	4
12297387	141	41
12297395	141	35
12297399-1	95	22
	103	22
12297399-2	100	55
	108	74
12297399-3	100	56
	108	75
12297403-2	155	16

PART NUMBER	FIG.	ITEM
12297412	117	3
12297417	151	11
12297418	151	4
12297422	141	46
12297447	118	8
12297448	118	10
12297453	117	62
12297462	139	10
	140	10
12297466	146	22
12297469	146	51
12297470-1	146	52
12297470-2	146	43
12297492	146	60
12297497	154	49
12297498-1	154	36
12297506	154	40
12297529-1	38	105
12297541	193	20
	194	24
12297567	31	40
12297567-2	33	15
12297567-3	33	14
12297567-4	33	13
12297571	38	29
12297573	126	47
12297578	33	9
12297598	191	5
12297603	117	1
	118	27
	119	61
12297604	118	19
	119	64

PART NUMBER	FIG.	ITEM
12297631	191	11
12297656	118	53
	119	33
12297676	32	6
12297681-1	39	47
	40	77
12297681-2	39	54
	40	89
12297697	232	3
12297742	12	6
12297746	27	28
	28	32
12297749	38	127
12297750	38	81
12297751	38	85
12297759	186	5
12297778	39	31
	40	80
12297780-3	300	58
12297780-5	182	9
12297780-6	181	59
12297791	38	86
12297815	118	45
	119	31
12297873	169	14
12297878	73	42
12297879	146	38
12297886	268	21
	276	22
12297897	139	12
	199	11
	200	13
12297910	83	12
12297915	33	1
12297929	193	11
12297933	169	13
12297937	221	3
12297938-1	57	39
12297938-2	57	39
12297950	73	79
	86	39
12297951	73	86
	86	44
12297964	214	5
	218	15
12297980	59	89
12297984-2	2	46
12297984-6	314	8
12297993	38	90
12298002	154	47
12298016	38	83
12298032	100	3
	108	3
12298034	100	12
	108	9
12298035	100	63
	108	82
12298038	22	7
12298046	139	21
12298051	15	2
12298056	15	48
12298057	15	46
12298058	15	45
12298059	15	47
12298060	15	40
12298061	15	41

PART NUMBER	FIG.	ITEM
12298063	15	49
12298064	139	20
12298068	97	20
	105	29
12298074	27	60
	28	66
12298079	223	26
12298085	223	5
12298086	223	25
12298088	223	2
12298091	305	34
	BULK	16
	BULK	27
	BULK	6
12298092	305	13
12298097	325	3
12298098	305	36
12298099	327	1
12298101	305	115
12298102	305	75
12298102-1	319	65
12298103	327	3
12298104	305	18
12298105-1	305	10
12298105-2	305	43
12298105-3	305	16
12298109	319	68
12298116	132	23
	133	6
12298121	132	21
12298125-1	2	45
12298125-2	2	49
12298139-1	312	12

PART NUMBER	FIG.	ITEM
12298140	312	3
12298141	132	70
	133	107
12298145	305	27
12298145-1	307	2
12298148-1	165	8
12298148-4	32	8
	33	11
	165	6
12298167	316	1
12298168	316	3
12298169	316	4
12298170	316	2
12298171	316	5
12298193-3	123	20
12298194	123	16
12298197	154	43
12298198	154	10
12298205	32	2
	33	16
12298209	118	15
	119	15
12298210	117	25
12298210-2	117	12
12298222	132	22
	133	33
12298225	132	30
	133	20
12298230-2	117	27
	118	63
	119	39
12298232	207	6
12298243	132	75

PART NUMBER	FIG.	ITEM
	133	113
12298245	132	39
	133	25
12298246	132	34
	133	34
12298247	132	40
	133	26
12298252	132	71
	133	108
12298253	132	62
	133	79
12298256	186	4
12298260	33	7
12298267	182	3
12298271	126	1
12298291	58	28
12298300	52	18
12298320	123	40
12298332	124	7
12298334	124	3
12298335	124	5
12298344	132	36
	133	22
12298496-1	12	24
12298506	117	74
12298597	59	55
12298599	59	75
12298601	59	44
12298622	73	46
12298649	73	94
12298650	199	8
	200	11
12298651	61	43
12298654-2	58	5
12298656	221	13
12298668	305	88
12298669	305	90
12298670	305	89
12298671	305	91
12298672	100	1
	108	1
[redacted]	[redacted]	[redacted]
[redacted]	[redacted]	[redacted]
[redacted]	[redacted]	[redacted]
12299720	195	7
	196	7
12299728	195	5
	196	5
[redacted]	[redacted]	[redacted]
	[redacted]	[redacted]
12300112-2	98	44
	106	46
	162	41
12300126	90	20
12300128	59	42
12300163-4	199	24
12300202-1	243	23
12300203	57	10
	132	74
	133	112
12300289	305	42
12300374	113	15
	167	5
	172	72
	[redacted]	[redacted]
	[redacted]	[redacted]

PART NUMBER	FIG.	ITEM
12300453-1	154	74
12300453-2	154	75
12307159	61	29
12307160	61	3
12307162	314	14
12307168	59	48
12307174	53	23
12307184	97	1
	105	1
12307205	62	290
12307206	62	303
12307207	62	198
12307208	62	187
12307210	148	4
12307211	149	16
12307212	149	6
12307216	149	14
12307217-1	149	5
12307217-2	149	1
12307219	149	2
12307223	149	15
12307230	148	2
12307231	148	1
12307232	150	3
12307234	150	6
12307235	150	4
12307236	150	2
12307240	178	12
	179	7
12307255	190	3
12307261	181	22
12307261-1	181	23
12307262	182	30
12307263	182	28
12307264	182	12
12307266	182	29
12307267-1	181	34
	182	41
12307267-2	181	36
	182	42
	182	42
12307268	181	35
12307269	181	49
12307270	181	56
12307271	181	21
12307272-4	181	17
12307285-1	182	45
12307285-2	182	46
12307294	57	21
12307296-1	2	9
12307296-2	2	4
12307297-2	22	5
12307298	193	27
	194	31
12307299	193	24
	194	28
12307300	193	14
	194	17
12307301	38	77
12307302	57	18
12307307-2	132	66
	133	83
12307309	132	46
	133	64
[redacted]	[redacted]	[redacted]
[redacted]	[redacted]	[redacted]

PART NUMBER	FIG.	ITEM
[redacted]	[redacted]	[redacted]
12307324	178	13
12307339	232	15
12307351	126	55
12307360	57	8
12307364	57	33
12307365	57	4
12307366	57	36
12307373	232	12
12307384	181	58
12307408	126	62
12307410	126	57
12307412	227	5
12307414	154	66
12307422	123	22
12307423	126	19
12307424	126	9
12307426	141	34
12307433	39	11
12307434	39	6
12307435	39	3
	40	15
12307437-1	39	15
12307437-2	39	38
12307449	186	6
12307450	186	2
12307451	39	40
12307466	39	19
12307468	39	42
12307492	129	28
12307519	42	3
	43	3
	44	3

PART NUMBER	FIG.	ITEM
12307525	161	6
12307526	161	10
12307531	132	50
	133	67
12307532	183	24
12307533	39	5
12307554	161	15
12307555	59	62
12307574	73	59
12307576	319	74
12307585	132	55
	133	72
12307586	132	48
	133	66
12307587	154	23
12307588	53	20
12307590-2	183	13
12307590-3	183	23
12307591	183	16
12307593	126	29
12307598	97	2
	105	2
12307600	KITS	8
12307603	183	19
12307604	183	1
12307614	154	33
12307634	58	43
12307635-3	58	45
12307638	154	8
[redacted]	[redacted]	[redacted]
	[redacted]	[redacted]
12308171	126	30
12308186	182	2

PART NUMBER	FIG.	ITEM
12308187	181	37
12308188	181	42
12308189	182	1
[redacted]	[redacted]	[redacted]
	[redacted]	[redacted]
12308205	108	12
12308206	95	47
	103	46
	109	66
12308207	126	37
12308212	BULK	41
12308215-3	95	50
	103	49
	109	69
12308220	39	28
12308230	135	3
12308235-1	88	9
12308237	55	25
12308238	79	4
	88	8
12308239	55	35
12308240	14	5
	21	6
	127	65
	170	22
	201	9
12308241	79	5
	88	5
12308242	193	26
	194	30
12308251	79	3
	88	6
12308253	79	2

PART NUMBER	FIG.	ITEM
	88	7
12308271	79	9
12308283	146	39
12308288	316	10
12308310	316	11
12308330	73	97
	86	49
	90	18
	177	6
12308376	270	5
	274	10
12308383	213	8
12308396	227	33
12308397	227	30
12308398	227	37
12308399	227	31
12308400	227	27
12308424	118	33
12308425	186	7
12308434	39	63
	40	60
12308437	118	23
	119	53
	185	60
12308438-1	55	27
12308439	55	36
12308475	79	6
	88	4
12308476	79	1
	88	1
12308477	193	28
	194	32
12308498	15	21

PART NUMBER	FIG.	ITEM
12308572	123	21
12308587	123	34
12308606	57	79
12308607	57	61
12308614	15	28
12308642	157	26
12308644-1	49	1
12308678	57	12
12308682	132	41
	133	5
12308684	39	41
12308685	39	17
12308687	25	124
	141	17
12308708-1	117	24
12308708-2	117	23
12308711	29	64
	30	1
12308747	25	36
12308748	25	37
12308750	129	69
12308753	141	12
12308782	12	10
12308783	39	20
	40	46
12308796	15	52
12308805	13	1
12308806-1	14	12
12308806-2	14	9
12308807	14	11
12308808	14	13
12308809	14	2
12308827	39	21

PART NUMBER	FIG.	ITEM
12308839	36	1
12308864	29	61
12308865	29	77
12308894	148	3
12308936-1	15	5
12308954	193	7
	194	7
	270	32
	274	33
12308970-16	25	42
12308970-17	25	43
12308985	38	87
12309004	30	26
12309233	123	35
12309272-7	BULK	17
12309647	246	14
12309652	247	1
12309662	247	8
	251	17
12309663-1	246	5
12309663-2	251	7
12309663-3	246	7
12309663-4	247	11
	251	18
12309663-5	247	14
12309664	247	17
12309665	250	2
12309666	250	4
12309667	252	6
12309668	252	4
12309669	252	2
12309673	247	13
12309674	249	7

PART NUMBER	FIG.	ITEM
12309675	251	3
12309676	249	1
12309685	249	4
	251	6
12309686	252	5
12309688	252	1
12309689	248	8
12309690	248	5
12309691	248	7
12309692	247	7
12309693	247	3
12309694-3	246	9
12309694-4	246	10
12309696	249	14
12309697	249	9
12309698	251	8
12309699	251	4
12309700	250	3
12309702	250	5
12309703	246	15
12309704	247	10
	251	16
12309708	251	2
12309709	246	11
12309718	246	13
12309745	325	11
12310099	325	2
12310100	325	1
12310380	157	12
12313779	313	2
12313787	305	73
12314082	114	6
	280	6

PART NUMBER	FIG.	ITEM
12316775	42	47
12316777	227	20
12316778	243	12
	[redacted]	[redacted]
	[redacted]	[redacted]
12316779	227	19
12316780	243	24
12316781	243	28
12316782	243	30
12316785	243	29
12316786	243	16
12316787	243	10
12316788	243	18
12316802	12	22
12316803	12	17
12316805	39	62
	40	88
12316808	95	44
	103	43
	109	63
12316814	177	15
12316831	39	57
	40	54
12316849	308	1
12316850	308	3
12316878	155	28
12316896	132	6
	133	40
12316897	39	51
	40	83
12316906	326	1
12316907	326	9
12316908	326	20

PART NUMBER	FIG.	ITEM
12316909	326	12
12316910	326	2
12316919	73	87
	86	43
12316940	39	58
	40	55
12316945	39	61
	40	58
12316953	187	9
12316959-1	187	10
12316959-2	187	10
12316959-3	187	10
12316959-4	187	10
12316962-1	312	2
12316966	227	1
12316998	182	55
12317019	15	4
12317023	38	32
12317024	38	25
12317025	38	33
12317026	38	27
12317036-1	222	5
12317037-2	222	4
12317038	222	1
12317043	129	38
12317049	38	62
12317054-1	221	1
12317055	222	2
12317066	270	2
	274	7
12317076	29	57
12317101	57	91
12317102	57	92

PART NUMBER	FIG.	ITEM
12317107	129	36
12317125-1	213	9
12317155	213	10
12317156	213	1
12317157	213	5
12317158	213	7
12317161	305	80
12317162	29	80
12317163	15	37
12317164	15	35
12317168	42	10
12317179	237	56
12317181-7	254	1
12317181-9	234	5
12317182	305	83
12317184	255	30
12317187	237	40
12317195	237	55
12317196	232	11
12317197	234	4
12317202	239	19
12317203	240	16
12323319	213	22
12323328-2	243	6
12323338	57	83
12323396	60	24
12323398-1	218	4
12323401	314	3
12323405	305	49
12325528	27	3
	28	3
12325529	243	20
12325548	171	19

PART NUMBER	FIG.	ITEM
12325573	63	9
12325612-1	38	119
12325612-2	38	120
12325624	314	13
12325629	314	7
12325630-1	314	4
12325630-2	314	11
12325631	315	2
12325632	313	1
12325633	313	3
12325634	315	1
12325635	315	4
[redacted]	[redacted]	[redacted]
	[redacted]	[redacted]
[redacted]	[redacted]	[redacted]
	[redacted]	[redacted]
12328317	325	5
12328480	162	60
12328482	162	13
12328483	162	12
12328484	162	26
12328485-1	162	45
12328485-2	162	44
12328486	162	28
12328487	162	30
12328490	162	11
12328495	162	64
12328545	40	25
12328546-1	40	31
12328547	40	39
12328555	38	72
	193	15
	194	18

PART NUMBER	FIG.	ITEM
12328579	306	2
12328582-1	BULK	26
	BULK	43
12328582-5	BULK	28
12328582-9	BULK	29
12328583-10	BULK	34
12328583-19	BULK	35
12328583-20	BULK	36
12328583-5	BULK	37
12328583-7	BULK	38
12328583-8	BULK	39
12328584-2	BULK	30
12328593-3	BULK	31
12328610	73	71
	86	26
12328623-1	[redacted]	[redacted]
	300	22
12328623-2	94	52
	102	51
12328623-3	144	12
12328624-1	271	24
	275	28
12328659	181	44
	182	25
12328660	38	91
12328660-1	38	92
12328661-1	39	55
	40	90
12328661-2	39	49
	40	94
12328662	39	79
	40	65
12328663	39	46

PART NUMBER	FIG.	ITEM
	40	76
12328699	86	28
12328709	40	51
12328720-1	39	32
	40	81
12328720-2	181	32
	182	54
12328721	38	24
12328725	52	3
12328726	52	4
12328728-1	199	3
12328757-1	212	1
12328757-2	212	2
12328758	40	84
12328759	40	79
12328769	132	13
	133	52
12328770	40	34
12328805	53	14
12328816	319	71
12328824	31	47
12328853	39	43
	40	82
12328920	40	24
12328935	227	34
12328936	14	6
12328959	27	12
	28	12
[redacted]	[redacted]	[redacted]
	[redacted]	[redacted]
12328970	98	22
	106	21
12328971	98	17

PART NUMBER	FIG.	ITEM
	106	16
12328980	40	49
12328982	59	90
12328984	126	23
12328984-1	129	33
12328991	129	39
12329021	97	18
	105	12
12329033-5	126	18
	270	30
	271	18
	274	32
	275	19
12329034-1	126	52
12329034-2	126	10
12329047	146	7
12329047-3	146	9
12329047-4	146	8
12329052	98	18
	106	20
12329062	118	36
12329067	162	71
	210	2
12329068	162	65
	210	5
12329085	94	70
	102	75
12329088-1	132	25
	133	8
12329088-2	132	26
	133	9
12329099	132	5
	133	41

PART NUMBER	FIG.	ITEM
12329122	132	3
12329123	132	4
12329124	117	4
	118	11
12329137W	96	27
	104	27
[redacted]	[redacted]	[redacted]
	[redacted]	[redacted]
12329195	165	4
12333783		
12333899-3		
12333929		
12333944-1		
[redacted]	[redacted]	[redacted]
12333945		
12334217	52	8
12334218-1	52	25
12334218-2	52	25
12334221	228	14
12334222	228	17
12334223	228	10
12334224	228	16
12334228	15	10
12334229	15	2
12334263-1	117	72
	118	43
12334263-2	117	18
12334263-3	118	38
12334263-5	117	2
12334263-6	117	40
12334263-7	117	61
12334263-8	117	65
12334264	117	54

PART NUMBER	FIG.	ITEM
	118	17
12334265-1	118	58
12334276	73	91
12334277	73	30
12334285	227	44
12334287	2	37
12334287-10	8	5
12334287-11	8	3
12334287-12	8	2
12334287-4	8	4
12334287-5	8	1
12334287-6	8	6
12334287-7	8	8
12334287-8	8	9
12334287-9	8	7
12334292	311	18
12334315-1	100	59
	108	78
12334321	227	48
12334341	29	86
12334342	29	88
12334343	29	89
12334344	29	87
12334348	127	49
12334350	123	36
12334352	39	34
12334360	57	104
	59	43
12334361	123	37
12334362	39	45
12334363	100	53
	108	72
12334368	123	38

PART NUMBER	FIG.	ITEM
12334404	197	9
	198	10
12334415	129	31
12334482	15	22
12335670	305	92
12343072	114	5
	280	5
12344779	156	2
12350390	127	43
12350419	132	67
	133	84
12350420-1	132	53
	133	70
12350480-2	123	9
12350509-1	161	13
12350526-1	BULK	8
12350526-2	BULK	9
12350527	162	51
12350529	162	73
[redacted]	[redacted]	[redacted]
	[redacted]	[redacted]
	[redacted]	[redacted]
	[redacted]	[redacted]
12350541	180	3
12350549	132	47
	133	65
12350577	100	43
	108	41
12350603	29	69
12350604	29	59
12350605	29	60
12350614	KITS	9
12350615	KITS	10

PART NUMBER	FIG.	ITEM
12350647	27	22
	28	26
12350652	162	35
12350673	139	27
12350678	137	7
12350701	305	24
12350701-10	306	1
12350721	306	6
12350722	306	5
12350723	306	3
12350724	306	4
12350736	170	18
12350769	40	30
12350770	40	37
12350779	KITS	11
12350789	162	16
12350834-1	95	41
	103	54
	109	60
	149	13
12350834-2	59	38
12350849	118	28
	119	71
12350850	155	2
12350860	38	102
12350863	38	121
12350868	39	44
12350880-18	39	33
12350882	29	83
12350883	39	37
	40	12
12350891	27	6
	28	6

PART NUMBER	FIG.	ITEM
12350892	27	41
	28	47
12350898	18	2
12350910	141	49
12350928	86	1
12350934	141	45
12350939	40	42
12350941	52	13
12350946	96	23
	104	23
12350962	25	147
	170	11
12350969-1	129	57
12350969-2	129	65
12350969-4	129	62
12350973	129	53
12350978	129	61
12350982	27	62
	28	68
12350983	27	37
	28	43
12350984	27	26
	28	23
12350985	27	27
	28	22
12350989	129	49
12350991	129	68
12351027	118	60
12351030	117	17
12351032	117	41
12351034	117	60
12351045-1	22	2
12351062	60	79
12351072	39	66
	40	63
12351085	60	80
12351126	60	77
12351130	55	1
12351136	129	43
12351143	129	10
12351157	27	40
	28	46
12351180	27	30
	28	36
12351209	25	20
12351243	127	51
12351246	127	57
12351247	127	82
12351251	127	56
12351252-3	127	69
12351252-4	127	73
12351351	326	3
12354603	103	68
	110	37
	158	56
12354605	103	69
	110	38
	158	59
12357792	193	22
	194	26
12357908	22	3
12357909	193	25
	194	29
12357918	38	75
	193	12
	194	15

PART NUMBER	FIG.	ITEM
12358398	25	158
12358401	29	24
12358433	81	1
12358458	94	10
	102	10
12358464	42	7
	43	7
	44	7
12358597	81	4
12358599	81	7
12358605-1	23	4
12358605-2	23	7
12358607	129	52
12358610	29	43
12358636	18	10
12358661	25	5
12358662	25	4
12358798	118	70
12358823	29	13
12358858	52	17
12358867	127	94
12358874	31	37
12358893	96	16
	104	16
12358894	59	91
12358898	30	29
12358910	82	8
12358915	60	84
12358919	57	71
12358924	60	73
12358925	60	87
12358930-1	118	61
	119	38
12358930-10	118	1
	119	75
12358930-12	118	24
	119	62
12358930-13	117	46
	118	39
12358930-14	118	34
	119	78
12358930-15	117	52
12358930-16	117	47
12358930-17	118	2
	119	76
12358930-18	118	59
	119	47
12358930-19	118	25
	119	60
12358930-2	117	29
	118	62
	119	46
12358930-20	119	63
12358930-21	119	67
12358930-22	119	65
12358930-23	119	54
12358930-25	119	37
12358930-3	118	64
	119	43
12358930-5	117	20
12358930-7	118	65
	119	44
12358930-8	117	39
	118	31
	119	74
12358930-9	118	30

PART NUMBER	FIG.	ITEM
	119	73
12358931	60	72
12358932	60	74
12358933-1	60	85
12358933-2	60	83
12358937	81	10
12358938	81	34
12358939	81	18
12358943	82	15
12358944	82	18
12358949	81	21
12358957	59	1
12358969	81	31
12358976	57	44
12358981	83	1
12358982	86	30
12358987	316	6
12358995	58	11
12358997	57	46
12358998	57	49
12358999	57	13
12359036	127	33
12359040	127	32
12359042	127	30
12359055	12	16
12359103	86	14
12359148-3	20	22
12359148-4	20	21
12359247	127	83
12359253	127	81
12359272	25	164
12359289	25	141
12359290	25	160
12359290-3	25	138
12359291	25	146
12359299	30	2
	211	6
12359300	30	20
12359301	30	22
	211	13
12359307-1	34	6
12359308	62	39
12359325	127	87
12359348-2	55	2
12359374	20	13
12359375	20	11
12359382	20	18
12359384-2	20	14
12359385	20	25
12359401	25	106
12359419	20	30
12359421	90	5
12359421-1	92	3
12359421-2	92	1
12359427	20	17
12359435	171	3
12359440	20	31
12359441	20	27
12359447	161	23
12359454	170	12
12359456-1	20	35
12359456-2	20	33
12359456-3	20	34
12359457-2	20	36
12359460	25	151
12359466-3	42	49

PART NUMBER	FIG.	ITEM
12359466-4	42	13
12359466-7	48	1
	48	1
12359467	49	4
12359469-2	49	3
12359472	20	13
12359480	100	60
	108	79
12359494	25	119
12359501	20	15
12359506-2	127	27
12359508	25	132
12359521	25	161
12359522	90	41
12359525	25	135
12359532	90	36
12359533	90	37
12359539	134	7
12359543	134	10
12359544	134	6
12359545	20	26
12359548	59	74
12359604	170	21
12359605	170	3
12359625-1	161	25
12359639	53	17
12359651-2	100	57
	108	76
12359657-1	100	61
	108	80
12359657-2	100	62
	108	81
12359659	127	17
12359660	127	14
12359661	127	10
12359662	127	72
12359687-1	118	72
12359687-2	118	71
12359705	41	23
12359714	25	58
12359723	25	128
12359724	25	127
12359756	25	64
12359757	25	63
12359761	25	155
12359762	25	123
12359777	100	8
	108	8
12359789	25	22
12359818	161	19
12360850-1	111	8
12360870-2	111	7
12367361	29	37
	211	8
12367362	25	162
12367365	25	142
12367369	25	149
12367372	25	44
12367379	25	34
12367398-1	42	40
	43	34
12367398-2	42	39
	43	33
12367398-3	42	32
	43	45
12367398-4	42	31

PART NUMBER	FIG.	ITEM
	43	44
12367401	57	99
12367402	123	12
12367450	170	19
	171	14
12367466	41	20
12367467	154	46
12367512	39	50
	40	95
12367532	83	6
12367532-1	83	6
12367536	100	54
	108	73
12367541	155	6
12367543	155	9
12369237	94	4
	102	4
12369239	94	23
	102	23
12369241	94	8
	102	8
12369242	94	17
	102	17
12369243	159	41
	162	55
12369253	129	11
12369254	129	14
12369255	129	8
12369256	129	22
12369257	129	15
12369268	155	1
12369271	155	8
12369308	42	22

PART NUMBER	FIG.	ITEM
	43	28
12369309	127	95
12369310	42	19
	43	25
	44	25
12369311	42	18
	43	24
	44	24
12369315	20	1
12369316	20	2
12369320	25	144
12369326	94	14
	102	14
12369327	94	24
	102	24
12369341-1	36	3
12369361	27	32
	28	38
12369362	27	33
	28	39
12369363	27	46
	28	52
12369364	27	35
	28	41
12369370	154	20
	155	15
12369371	82	5
12369372	154	69
12369387	38	117
12369388	38	114
12369389	38	116
12369403	155	3
12369404	117	10

PART NUMBER	FIG.	ITEM
12369421	60	81
12369422	60	82
12369423	60	71
12369424	60	88
12369501	25	12
12369507	25	47
12369509	25	16
12369510	153	1
12369511	146	57
12369511-1	146	59
12369511-2	146	59
12369514	153	3
12369514-1	153	4
12369515	146	62
12369515-1	153	7
12369520	25	1
12369526	83	5
12369534	127	53
12369537	154	27
12369538	154	3
12369539	154	26
12369541	154	32
12369551	127	36
12369560	38	130
12369580	132	98
	133	132
12369593	37	3
12369775	17	13
12369776	17	4
12369777	17	5
12369778	17	12
12369782	17	10
12369798	29	15
	211	24
12369800	29	21
	211	28
12369802	25	50
12369804	29	26
12369807	29	28
12369813	25	28
12369830	18	3
12369835	42	35
	43	38
	44	38
12369841	129	46
12369862	129	48
12369863	129	47
12369869-1	141	39
12369889	29	31
12369902	96	19
	104	19
12369903-1	34	14
12369903-2	34	5
12369906	59	5
12369910-1	126	2
12369916	18	11
12369937	129	54
12369945-1	60	43
	117	22
12369946	132	100
	133	134
12369947	52	20
12369953	30	3
12369956	29	36
12369960	30	16
	211	27

PART NUMBER	FIG.	ITEM
12369960-2	30	16
12369965-1	30	19
12369965-2	30	23
	211	14
12369967	30	24
	211	17
12369967-1	30	21
	211	26
12380430	145	40
12380483	145	37
12380544	60	55
12381555	81	27
12381603	27	55
	28	60
12381627	316	7
12381628	57	45
12381632	57	76
12381650	73	52
	86	8
12381673	27	21
	28	24
12384658	123	7
12384659-1	58	41
12384668	42	2
12384672	82	13
12384674-2	126	3
12384684	97	30
	105	35
12384685	97	29
	105	34
12384691	27	59
	28	65
12384693	27	58

PART NUMBER	FIG.	ITEM
	28	64
12384696	17	7
12384708	17	9
12384714-1	25	77
12384716-1	25	62
12384716-3	25	91
12384717	25	56
12384721	129	59
12384728	31	38
12384752	38	124
12384755	146	4
12384788	38	123
12384790	57	72
12384801	39	30
	40	78
12384802	39	80
	40	93
12384803	39	72
12384807	144	2
12384817	146	53
12384820	146	23
12384821	146	34
12384822-8	27	16
	28	16
12384824	20	24
12384825	127	46
12384841	39	68
	40	66
12384844	39	87
12384906	38	34
12384924	39	12
12384925-1	39	13
12384925-10	181	20

PART NUMBER	FIG.	ITEM
12384925-2	39	14
12384925-3	38	19
12384925-4	38	18
12384925-5	38	17
12384925-6	38	16
12384925-8	40	26
12384925-9	40	43
12384928	38	104
12384929	157	36
	158	52
12384937	153	14
12384937-13	153	17
12384968	38	20
12384971	38	3
12384973	38	42
12384980	38	51
12384981	146	47
12384983	38	15
12384987	146	61
12384987-1	38	71
12384987-2	38	59
12384988	38	36
12385052	39	4
12385058	38	134
12385066	41	17
12385083	41	13
12385084	41	18
12385089	41	11
12385090	41	12
12385091	41	14
12385123	118	32
12385133	38	55
12385138-1	60	62
12385160	38	63
12385161-1	39	84
12385161-2	39	89
12385182	38	88
12385183	38	98
12385184	38	52
12385185	38	35
12385186-1	38	68
12385186-2	38	70
12385187	38	67
12385211	39	76
	40	74
12385212	39	74
	40	72
12385231	39	77
	40	75
12385232	39	23
	40	86
12385234	38	45
12385235	38	14
12385236	38	12
12385237	38	37
12385238	38	8
12385303	158	25
	290	4
	[redacted]	[redacted]
12385333-1	2	19
12385336	40	8
12385337	40	3
12385342	39	83
12385344	40	16
12385345	40	27
12385350	38	21

PART NUMBER	FIG.	ITEM
12385351	38	99
12385352	38	100
12385353	38	103
12385354	38	108
12385356	38	44
12385409	28	21
12385465	176	2
12385468	176	1
12385544	160	11
12385556	176	6
12385557	176	3
12385558	176	5
12385559	176	4
12385605	2	29
12385659-1	176	7
12385659-2	176	7
12385659-3	176	7
12385659-4	176	7
12385659-5	176	7
12385659-6	176	7
12385659-7	165	16
	176	7
12385659-8	176	7
12385659-9	176	7
12385676	38	93
12385724	2	6
	9	16
	158	54
	159	51
	171	5
12385728	161	17
12385756-1	117	64
12385788	39	52

PART NUMBER	FIG.	ITEM
	40	85
12386217	40	32
12386323	290	2
	[redacted]	[redacted]
12386323-4	290	3
	[redacted]	[redacted]
12386330	40	35
12386331	40	44
12386333	40	40
12386399	40	71
12386427	75	26
12386428	40	47
12386441	81	42
12386442	81	15
	239	5
12386579	29	22
12386609	129	64
12386631	59	14
12386631-1	59	14
12386632-1	75	29
12386662	25	72
12386668	95	13
	103	13
12387279-32	15	36
12387327-1	2	23
	172	9
12387327-10	2	11
12387327-20	172	80
12387327-22	2	44
	130	7
	172	56
	189	2
	[redacted]	[redacted]

PART NUMBER	FIG.	ITEM
[redacted]	[redacted]	[redacted]
[redacted]	[redacted]	[redacted]
[redacted]	[redacted]	[redacted]
[redacted]	[redacted]	[redacted]
[redacted]	[redacted]	[redacted]
12387327-28	290	8
[redacted]	[redacted]	[redacted]
12387327-3	2	8
	130	42
	172	60
	189	6
	300	12
12387327-30	172	66
12387327-31	189	8
[redacted]	[redacted]	[redacted]
12387327-37	130	30
12387327-5	130	39
[redacted]	[redacted]	[redacted]
[redacted]	[redacted]	[redacted]
[redacted]	[redacted]	[redacted]
12389322	65	15
12389345	145	20
12389347	145	30
12389357	145	29
12389358	145	28
12389364	145	32
12389407	145	11
12389408	145	18
12389411	145	19
12389419	145	22
12389429	145	39
12389430	145	33
12389435	145	24

PART NUMBER	FIG.	ITEM
12389436	145	4
12389437	145	8
12389438	145	7
12389439	145	17
12389457	145	9
12389459	145	15
12389462	145	36
12389494	145	5
12389497	145	27
12389498	145	6
12389501	145	34
12395339	132	88
12395340	133	129
	132	82
12395341	133	123
	132	94
12395352	133	120
12395584	25	60
12395585	141	48
12395646	141	32
12395647	126	8
12395649	126	7
	30	10
12395651	211	25
12395660	25	53
12395662	25	54
12395673	96	48
12395677	104	48
	25	82
12395678	96	50
12395680	104	50
	141	36
	25	92

PART NUMBER	FIG.	ITEM
12395681	25	115
12395683	25	116
12439202	25	76
12439205	127	52
12439207	25	110
12439208	25	109
12439237	25	111
12439243	25	75
12439245	25	105
12446194	145	16
12446195	145	14
12446205	100	42
	108	40
12446210	145	35
12446212	65	28
	69	4
	70	4
12446240	145	23
12446241	145	21
12446242	144	4
12446319	65	37
12446333	144	5
12446344	65	38
12446350-1	145	38
12446418	65	19
12446439	65	23
12446451	144	7
12446521	70	8
12446650	144	5
12446954	131	11
12462121	60	68
12462137	81	16
12462151	29	14

PART NUMBER	FIG.	ITEM
	211	12
12462191	30	33
	211	22
12462191-1	30	33
12462225	30	41
	211	5
12462225-1	30	41
12462226	30	42
	211	18
12462226-1	30	42
12462245	90	23
12462246	90	30
12462247	90	40
12462248	90	29
12462251	90	21
12462252	90	8
12462256	154	22
12462257	154	16
12462258	127	92
12462259	154	15
12462372	171	8
12462377	113	1
12462398	113	8
12462399	113	6
12462400	113	14
12462401	113	2
12462404	113	12
12462405	113	17
12462406	95	68
	103	67
12462419	171	10
12462440	31	10
	211	30

PART NUMBER	FIG.	ITEM
12462443	29	8
	211	34
12462444	31	4
	211	35
12462447	31	36
12462448	31	39
12462642	30	43
12462642-1	30	43
12462643	30	44
12462643-1	30	44
12462644	30	45
12462644-1	30	45
12462645	30	46
12462645-1	30	46
12462646	30	30
12462646-1	30	30
12462652	31	12
12462653	31	9
12462722	31	18
12462752	20	38
12462753	20	16
12462754	20	6
12462755	20	29
12462760	31	35
	211	21
12462770	31	31
12462775	31	17
12462939	31	22
12462947	31	29
12462948	31	34
12462959	31	7
	211	32
12462990	127	23
12462991	128	6
12462992	128	3
12462993	128	5
12462994	128	1
12462996	128	4
12463063-1	158	58
12463063-2	158	62
	159	48
12463063-5	158	60
12463063-6	158	48
12463063-7	158	50
12463093	31	20
12463094	25	153
12465329	99	26
	107	8
12465366	100	14
	108	11
12465367-2	272	21
	278	34
12465368	100	16
	108	14
12465369-1	95	77
	103	78
12465369-2	95	76
	103	77
12465369-4	100	13
	108	10
[redacted]	[redacted]	[redacted]
	[redacted]	[redacted]
12465369-7	100	41
	108	39
12465369-8	100	4
	108	4

PART NUMBER	FIG.	ITEM
12465369-9	95	81
	103	92
	110	56
12465370	100	20
	108	21
[redacted]	[redacted]	[redacted]
[redacted]	[redacted]	[redacted]
12465380	95	63
	103	62
12465405	99	4
	107	4
12465527-1	20	20
12465527-2	20	7
12465535	99	38
	107	38
12465875-4	177	5
12465935	165	14
12465941	31	25
12465962	12	20
12465965	98	10
	106	10
12465969	95	56
	103	55
12465988-1	55	12
12465990	55	33
12465990-10	60	15
12465990-11	61	20
12465990-12	57	107
12465990-13	57	80
12465990-14	60	31
12465990-2	57	54
12465990-3	57	62
12465990-4	57	20

PART NUMBER	FIG.	ITEM
12465990-5	57	24
12465990-6	57	28
12465990-7	60	51
12465990-8	57	14
12465990-9	59	59
12466002	95	90
	103	88
	110	53
12466010	105	19
12466015-1	95	92
	103	93
	110	57
12466023	100	15
	108	13
12466032	95	80
	103	81
	110	41
12466033-1	282	14
12466033-2	282	14
[redacted]	[redacted]	[redacted]
12466033-3	282	14
[redacted]	[redacted]	[redacted]
12466033-4	97	8
	105	5
	173	58
	282	14
[redacted]	[redacted]	[redacted]
12466035	95	82
	103	91
	110	45
12466037	75	40
12466038	31	28
12466039	31	27

PART NUMBER	FIG.	ITEM
12466044-1	157	35
12466052-1	162	14
12466052-2	162	2
12466052-3	162	57
12466052-4	162	34
12466052-5	162	33
12466052-6	162	48
12466052-7	162	52
12466052-8	162	74
12466052-9	162	72
12466061	158	24
12466061-7	158	26
12466062	158	28
12466071	BULK	1
12466072	BULK	3
12466073	158	23
12466080	146	19
12466081	146	17
12466082-1	146	30
12466082-2	146	25
12466087-2	158	10
	159	10
12466088	158	14
	159	30
12466090-1	131	1
12466090-10	131	17
12466090-2	131	7
12466090-3	131	8
12466090-4	131	2
12466090-5	131	21
12466090-6	131	6
12466090-7	131	24
12466090-8	131	12
12466090-9	131	14
12466091	94	75
	102	78
12466107-1	170	1
12466112	158	7
	159	7
12466121-1	130	31
	158	13
	159	13
12466124	158	29
	159	28
12466127	158	15
	159	16
12466128	158	22
12466137	158	6
	159	6
12466146	158	21
12466148	167	3
12466149-1	167	2
12466149-2	167	4
12466155	166	4
12466160	27	10
	28	10
12466172	158	9
	159	9
12466175	32	1
12466176	31	45
12466176-2	32	7
12466177	158	53
	159	50
12466178	171	11
12466186	107	54
12466187	102	60

PART NUMBER	FIG.	ITEM
12466187-2	94	58
12466188	102	77
12466188-2	94	74
12466195	94	54
	102	69
12466196	173	12
12466206	94	81
	102	43
12466207	100	83
	108	68
12466208	100	84
	100	85
	108	69
12466226	130	23
12466228	130	28
12466229	130	22
12466230	130	26
12466234	130	41
12466236	130	34
12466238	130	8
12466485	KITS	12
12469774	118	57
12469822	31	19
	211	33
12469879	KITS	13
12469910	100	77
	108	52
12469917	96	34
	104	34
12469918	96	32
	104	32
12469929	173	22
12469930	173	20
12469931	173	23
12470819	173	3
12470822	173	11
[redacted]	[redacted]	[redacted]
	[redacted]	[redacted]
[redacted]	[redacted]	[redacted]
	[redacted]	[redacted]
12471143	38	9
12471144	31	1
12471155	118	46
	119	32
12471160	305	44
	311	1
12471160-1	311	11
12471160-2	311	3
12471161	95	11
	103	11
12471185-3	173	46
12471186	173	52
12471187-1	173	34
12471187-2	173	37
12471188	40	5
12471193	99	12
	107	29
12471304	173	56
	282	9
12471729	34	7
12471730	34	8
12471762	162	19
	210	9
12473785	144	5
12476612	155	17
12476634	154	52

PART NUMBER	FIG.	ITEM
12476645	17	1
12476674	171	18
12476694	128	7
12476747	305	93
12478554	284	1
[redacted]	[redacted]	[redacted]
12478557	100	68
	108	42
12478558	100	70
	108	43
12478560	100	71
	108	44
[redacted]	[redacted]	[redacted]
12478563	108	45
12478567	100	37
	108	35
12478580	106	40
12478582	98	30
	106	30
12478585	100	72
	108	46
[redacted]	[redacted]	[redacted]
12478604	95	83
	103	90
	110	49
12478606	34	2
12478607	34	1
12479251	40	18
12479255	98	45
	106	43
12479412	2	41
12479412-10	7	5
12479412-11	7	9

PART NUMBER	FIG.	ITEM
12479412-4	7	3
12479412-5	7	6
12479412-6	7	7
12479412-7	7	8
12479412-8	7	10
12479412-9	7	4
12479419	118	51
12479422	25	93
12479428	100	74
	108	47
12479476	98	5
	106	5
12479486	96	33
	104	33
12479515	98	40
	106	39
12479519	108	53
12479522	31	32
12479523	31	33
12479529	127	88
12479532	99	5
[redacted]	[redacted]	[redacted]
12479532-1	99	5
[redacted]	[redacted]	[redacted]
12479532-3	99	5
[redacted]	[redacted]	[redacted]
12484070-1	97	25
	105	16
12484077-1	59	67
	81	45
12484077-3	59	72
12484077-4	59	82
	65	11

PART NUMBER	FIG.	ITEM
12484077-5	59	73
12484085	100	45
	108	60
12484120	100	51
	108	62
12484121	100	52
	108	63
12484122	100	47
	108	64
12484160	59	65
12484161	132	77
	133	115
12484177	100	49
	108	66
12484186	124	1
12484207	100	44
	108	59
12484208	123	23
12484209	101	2
12484220	KITS	14
12484230	59	81
12484278	41	10
12484279	41	3
12484290	154	39
12484297-1	316	8
12484297-2	316	9
12484314	118	47
	119	35
12484357	108	51
12484359	108	48
12484433	20	19
12484434	20	39
12484456	108	56
12484457	108	57
12484459	158	43
	159	43
12484747	272	71
	278	68
12484747-1	278	68
12488139	108	61
12488140	100	50
	108	65
12488194	146	31
12488198	125	9
12488200	125	10
12488202	101	1
12488210	100	48
	108	67
12488219	93	12
12488230	319	70
12488241	316	12
12488243	108	58
12488246	49	5
	49	14
12488260	123	31
12488266	25	23
12488275	25	17
12488277	123	17
12488361	38	82
12488396	83	10
	87	2
12488466-1	102	57
12488466-2	105	4
12488466-4	102	64
12488533-1	57	103
12488533-2	57	93

PART NUMBER	FIG.	ITEM
[redacted]	[redacted]	[redacted]
	[redacted]	[redacted]
[redacted]	[redacted]	[redacted]
	[redacted]	[redacted]
12496414	24	1
12496441	319	8
12496488	29	45
12496491	29	44
12496496	29	49
12496498	29	52
12496500	29	55
12496501	29	56
12496521	29	53
12496522	29	54
12496523	29	46
12496537-1	73	99
12496537-2	174	8
	175	5
	[redacted]	[redacted]
[redacted]	[redacted]	[redacted]
	[redacted]	[redacted]
12496678	154	54
12496683	305	112
12496686-1	127	106
12496691	127	131
12496692	127	132
12496693	127	133
12496695	127	116
12496696	127	117
12496697	127	127
12496698	127	121
12496700	127	122
12496702	127	129

PART NUMBER	FIG.	ITEM
12496705	127	118
12496707	127	130
12496708	127	128
12496716	2	42
12496716-1	10	1
12496716-2	10	2
12496716-3	10	3
12496716-4	10	4
12496716-5	10	5
12496717	81	23
12496725	127	124
12496775	305	33
12496780	43	2
	44	2
12496781	43	1
	44	1
12496782	43	10
	44	10
12496783	43	48
	44	46
12496785	49	13
12496789	49	8
12496794	49	10
12496795	49	11
12496796	49	7
12496797	49	12
12496798	43	22
	44	22
12496800-1	48	2
	48	2
12496800-82	43	46
	44	44
12496800-84	43	13

PART NUMBER	FIG.	ITEM
	44	13
12511186	100	21
	108	22
12512232	93	27
12512233	93	28
12512234	93	32
12512235	93	14
12512237	93	34
12512238	93	22
12512239	93	21
12512240	93	1
12512240-6	93	2
12512241	93	15
12512242	93	19
12512243	93	20
12512248	112	8
12512249	112	13
12512254	112	1
12512259	125	3
12512261	97	7
	105	3
12512262	112	2
12512263	112	20
12513201	154	11
12513202	94	64
12513203	94	67
	102	70
12513320-4	130	16
12513359	146	35
12513360	154	78
12513360-1	156	1
12513362	154	34
12513368	141	40
12513369	141	6
12516882	126	38
12516885	81	24
12516887	94	76
	102	79
12516891	173	51
12516892	173	50
12516893	172	53
	173	62
12516895	173	38
12516897	98	52
	106	55
12517165	2	1
12517168	2	15
12517169	158	65
	159	46
12517170	2	5
12517170-1	6	6
12517170-2	6	2
12517170-3	6	3
12517170-4	6	4
12517170-5	6	5
12517170-6	6	7
12517172-1	5	4
12517172-2	5	3
12517172-3	5	2
12517172-4	5	5
12517172-5	2	36
12517173-1	3	3
12517173-2	3	2
12517173-3	3	4
12517173-4	2	35
12517174	2	25

PART NUMBER	FIG.	ITEM
12517175	2	21
12517177	2	13
12517178	2	12
12517179	2	26
12517183	2	16
12517185	2	24
12517187	6	1
12517307	94	84
	102	46
12517309	130	25
12517310	130	27
12517379	130	32
12517542	282	14
12517618	38	111
12517620	40	23
12517694	100	64
12517695	100	65
12517696	100	67
12520291	98	27
	106	26
	133	1
12520295	133	59
12520296	133	53
12520297	133	47
12520298-3	133	60
12520299	133	39
12520300	133	38
12520301	133	57
12520302	133	136
12520304	100	58
	108	77
12520313	133	45
12520314	2	33

PART NUMBER	FIG.	ITEM
12520465-1	44	34
12520468-1	44	35
12520468-2	44	47
12520469	52	8
12520471-1	52	25
12520471-2	52	25
12520477	44	28
12520479-1	52	9
12520479-2	52	11
12520482-2	44	33
12520563	127	91
12520620-3	136	15
12520629	136	21
12520631	126	44
12520632	136	22
12520643	109	5
12520644	109	9
12520647	109	30
12520648	109	33
12520649	109	35
12520650	109	29
12520651	109	28
12520652	109	39
12520666	5	1
12520667	3	1
12521166	110	24
12521170	110	16
12521172-2	110	4
12521177	100	40
	108	38
12521178	100	37
	108	35
12521182	108	44

PART NUMBER	FIG.	ITEM
12521182-1	100	71
12521183	100	72
	108	46
12521184-1	109	10
12521184-2	109	24
12521185	109	40
12521186-1	100	39
	108	37
12521186-2	100	41
	108	39
12521188-1	108	71
	[redacted]	[redacted]
12521192-1	140	25
12521193-1	140	26
12521194	140	29
12521195	140	30
12521196-7	140	11
12521198	140	15
12521199-1	136	1
12521202	110	29
12521203	110	27
12521204	110	33
12521205	110	32
12521209	2	40
12521212	110	7
12521213	2	38
12521216	158	38
	159	38
12521217	157	1
12521218	158	34
	159	34
12521219	157	8
12521221	158	31

PART NUMBER	FIG.	ITEM
	159	31
12521222	158	30
	159	21
12521223	158	18
	159	15
12524021	305	109
12524027	305	101
12524031	305	100
12524035	305	111
12524176	305	102
12524483	305	104
12524519	305	99
12535035	305	110
12535592	170	6
12535646-1	55	7
12535646-2	55	7
12535647	2	43
12535649	119	1
12535652	119	59
12535654	119	55
12535656	38	96
12535661	119	50
12535662	121	4
12535663	121	11
12535666	28	27
12535667	28	33
12535668	28	25
12535669	119	66
12535670	119	18
12535671	119	10
12535672	119	22
12535674	119	8
12535675	119	19

PART NUMBER	FIG.	ITEM
12535676	119	23
12535697	110	17
	110	35
12535699	110	36
12535702	110	18
	110	30
12535710	109	42
12535710-1	109	42
12535715	136	23
12535718-1	109	14
	110	14
12535718-2	110	13
12535718-3	109	41
12535718-4	109	15
12535723	11	1
12535726	2	39
12535726-1	11	5
12535726-2	11	2
12535726-3	11	4
12535726-4	11	7
12535726-5	11	3
12535726-6	11	6
12540329-1	94	49
12540329-2	97	6
12540329-3	94	62
12540337-1	100	46
12540338-1	100	66
12540449	83	9
12540452	59	88
12540515	127	120
12540517	119	20
12540518	119	4
12540520	119	24
12540523-1	119	16
12540524-1	119	11
12540524-3	119	12
12540529	119	5
12540531	119	28
12540533	KITS	15
12540536	2	28
12540536-1	9	13
12540536-10	9	9
12540536-11	9	11
12540536-2	9	6
12540536-3	9	5
12540536-4	9	7
12540536-5	9	8
12540536-6	9	10
12540536-7	9	12
12540536-8	9	15
12540536-9	9	14
12540537	9	3
12540538	2	27
12540538-2	4	3
12540538-3	4	1
12540538-4	4	5
12540538-5	4	4
12540538-6	4	2
12540539-5	133	49
12540579	132	68
	133	85
12540618	157	22
12540655-4	133	138
12540655-5	133	99
12540655-7	133	89
12540657	133	94

PART NUMBER	FIG.	ITEM
12540658	133	91
12540659	133	96
12540665	158	49
12540669	59	15
12540695-1	158	63
12540695-3	158	61
12540706	38	113
12540707	173	1
12540726	172	45
	282	14
12540727	174	7
	175	4
12540732	158	64
	159	47
12540732-10	160	2
12540732-12	160	3
12540732-6	160	1
12540732-7	160	6
12540732-8	160	4
12540732-9	160	5
12540740	127	107
12540742	127	110
12540743	127	114
12540751	95	45
	103	44
	109	64
12540755	59	17
12540784	98	37
	106	36
12554927	170	26
12554928	170	25
12554937	157	15
12554938	157	10
12554945	159	26
12555055	194	12
12555107	135	13
	136	4
12555109	135	16
	136	6
12555168	159	23
12555170	159	31
12555222	127	105
12555353	130	4
12555357	130	43
12556247	130	9
12556375	100	79
12556376	100	78
12556377	100	80
12556378	100	81
	[redacted]	[redacted]
12556382	172	79
12556383	157	15
12556384	172	55
12556385	172	5
12556388	172	61
12556391	172	32
12558305	100	42
	108	40
12558307	65	9
12558348	65	8
12561065	KITS	16
12561104-17	236	13
12561104-3	239	2
12561104-4	240	2
12561105-2	237	17
12561105-3	255	15

PART NUMBER	FIG.	ITEM
12561105-5	235	40
12574078	62	276
	65	35
12576345	184	48
	184	48
	185	54
	185	54
12576362	184	47
	184	47
	185	53
	185	53
12577526	172	62
12577527	172	6
12577528	172	54
12577529	172	12
12577533	172	67
12577536	172	16
12577538	172	75
12577541	172	41
12577542	172	49
12577543	172	35
12577544-1	172	73
12577544-2	172	46
12577544-3	172	15
12577584	172	26
12577585	172	34
12577706	94	80
	102	66
[redacted]	[redacted]	[redacted]
12588005	109	23
12704126-3	251	12
127558	62	161
1282649	55	21

PART NUMBER	FIG.	ITEM
12900565	255	56
12900597	236	27
12900604-1	272	31
	278	10
12900737-11	237	36
12900737-38	238	55
12900737-46	238	53
12900737-71	238	82
12933367	181	33
12933371	177	12
12933388	181	27
12933389	181	9
12933390-1	181	7
12933391	181	8
12933392	181	5
12933398	181	40
12933399	181	10
12933420	228	6
12933429-1	181	13
12933429-2	181	25
12933434	184	19
	185	19
12933435	184	21
	185	21
12933436	184	36
12933438	184	17
	185	18
12933439	184	20
	185	20
12933512	200	22
12933513	201	2
12933515	200	21
12933517	197	6

PART NUMBER	FIG.	ITEM
12933517-1	197	6
	198	8
12933518	200	2
12933519	201	11
12933529	201	12
12933530-1	201	7
12933537	200	14
12933592	205	2
12933593	205	6
12933596	200	18
12933621	182	36
12933622	182	34
12933623	182	40
12933628	195	8
12933629	193	30
	194	33
12933632	184	90
	185	106
12933685	204	1
[redacted]	[redacted]	[redacted]
12933723	196	8
12933724	193	37
	194	40
[redacted]	[redacted]	[redacted]
12933761-1	210	28
12933761-2	210	4
12933767	185	41
12933774-1	185	36
12933774-2	185	44
12933775-1	185	35
12933775-2	185	43
[redacted]	[redacted]	[redacted]
12948123	227	53

PART NUMBER	FIG.	ITEM
12948134	227	52
12950937	244	7
12956544	272	47
	278	45
[redacted]	[redacted]	[redacted]
	[redacted]	[redacted]
12956549	275	6
[redacted]	[redacted]	[redacted]
	[redacted]	[redacted]
12956564	278	35
12956565	272	22
	278	36
12956568	272	44
	278	42
12956569	272	59
	278	57
12956572	272	46
	278	44
12956573	272	42
	278	39
12956574	272	3
	278	7
12956575	272	48
	278	46
12956591	272	7
	278	8
12956593	272	14
	278	19
12956599	272	16
	278	21
12956600	272	17
	278	22
12956601	272	20

PART NUMBER	FIG.	ITEM
	278	25
12956602	272	19
	278	24
12956603	272	18
	278	23
12956606	272	66
	278	64
12956607	31	13
	211	3
12956607-1	300	64
12956608	272	60
	278	58
12956609	272	43
	278	41
12956610	272	58
	278	56
12956611-2	272	51
	278	50
[redacted]	[redacted]	[redacted]
[redacted]	[redacted]	[redacted]
12956633	257	14
12956634	178	20
12956634-80	179	10
12956674	190	26
12956676	190	8
12956685	257	23
[redacted]	[redacted]	[redacted]
	[redacted]	[redacted]
12956701	190	12
12956702	190	20
[redacted]	[redacted]	[redacted]
12972073	325	12
12974707	208	13

PART NUMBER	FIG.	ITEM
	209	13
12975896-2	[redacted]	[redacted]
	268	27
[redacted]	[redacted]	[redacted]
[redacted]	[redacted]	[redacted]
	[redacted]	[redacted]
12976035	223	17
12976054	257	15
[redacted]	[redacted]	[redacted]
	[redacted]	[redacted]
12976079	190	16
12976080	190	15
12976082-1	190	32
12976082-2	190	27
12976083	190	21
12976087	191	4
12976088	191	16
12976089	191	3
12976090	191	14
12976102	209	21
12976104	208	3
	209	3
12976105	208	9
	209	9
12976107	209	20
12976108	208	8
	209	8
[redacted]	[redacted]	[redacted]
	[redacted]	[redacted]
12976126	232	10
12976176-20	233	1
12976176-21	233	1
12976221-20	233	9

PART NUMBER	FIG.	ITEM
12976221-21	233	9
12976269	241	37
12976270	241	19
12976273	241	44
12976275	241	22
12976276	241	46
12976278	241	28
12976301	241	51
12976305	241	6
12976306	241	8
12976310	241	29
12976315	241	58
12976316	241	49
12976321	241	32
12976322	241	27
12976323	KITS	17
[redacted]	[redacted]	[redacted]
	[redacted]	[redacted]
12976328	187	22
12976328-3	187	24
12976328-4	187	23
12976328-5	187	26
12976328-6	187	25
12976329	187	3
12976329-2	187	4
12976329-3	187	5
12976330	187	30
12976331-1	187	29
12976331-2	187	29
12976331-3	187	29
12976331-4	187	29
12976345	191	6
12976346	233	2

PART NUMBER	FIG.	ITEM
12976347	243	14
[redacted]	[redacted]	[redacted]
12976349	184	69
	185	82
12976350	29	1
	211	19
12976352	29	42
	211	16
12976353	184	73
	185	80
12976354	29	23
	211	23
12976373-2	232	16
12976388	235	41
[redacted]	[redacted]	[redacted]
	[redacted]	[redacted]
12976434	178	14
12976435	178	1
12976437	178	15
[redacted]	[redacted]	[redacted]
[redacted]	[redacted]	[redacted]
12976440	271	56
	275	58
12976441	271	79
	275	82
12976442	271	64
	275	66
12976443	185	75
12976444	185	5
12976445	185	73
12976446	185	74
12976451	223	23
12976452	257	12

PART NUMBER	FIG.	ITEM
12976453	257	36
12976491	272	10
	278	13
12976492	272	11
	278	14
12976504-1	271	76
	275	78
12976504-2	271	68
	275	70
12976505	271	71
	275	73
12976608	274	42
12976610	271	67
	275	69
12976614	223	24
12976622	257	34
12976623	257	31
12976627-60	213	6
12976628-1	212	5
12976631	187	15
12976632	187	17
[redacted]	[redacted]	[redacted]
	[redacted]	[redacted]
12976687	187	14
[redacted]	[redacted]	[redacted]
12976699	190	23
12976701-1	270	19
	274	21
12976711	190	22
12976713	209	18
12976715	209	14
12976727	271	70
	275	72

PART NUMBER	FIG.	ITEM
12976731	271	52
	275	54
12976732	271	77
	275	79
12976736	184	12
	185	38
12976737	184	18
	185	39
12976747	98	32
	106	32
	210	23
	[redacted]	[redacted]
	268	30
	271	7
	275	3
	[redacted]	[redacted]
	[redacted]	[redacted]
[redacted]	[redacted]	[redacted]
12976747-2	271	3
	271	75
	275	76
12976747-3	99	15
	107	16
	[redacted]	[redacted]
12976747-4	99	29
	107	34
	127	102
	[redacted]	[redacted]
	268	7
	[redacted]	[redacted]
	276	7
	[redacted]	[redacted]
12976747-5	257	19

PART NUMBER	FIG.	ITEM
	271	49
	275	51
12976747-7	106	32
12976747-9	98	54
	106	57
	173	41
12976749	184	9
	185	14
[redacted]	[redacted]	[redacted]
12976756	257	2
12976759	185	8
12976760	99	47
	107	48
	274	3
	275	39
12976760-1	98	23
	106	22
12976768	257	1
12976779	271	44
	275	46
12976787	270	23
	274	28
12976791	270	25
	274	25
129768	62	254
[redacted]	[redacted]	[redacted]
[redacted]	[redacted]	[redacted]
	[redacted]	[redacted]
[redacted]	[redacted]	[redacted]
12978987	187	6
12982416	268	26
	276	27
12982463	182	37

PART NUMBER	FIG.	ITEM
129839	62	252
12986259	257	37
12986264	272	15
	278	20
12986265	227	40
12986266-1	227	38
12986268	185	4
12986298	271	4
	275	7
12986309	190	49
[redacted]	[redacted]	[redacted]
	[redacted]	[redacted]
	[redacted]	[redacted]
12986313	184	106
	185	122
12986316	257	8
12986322	184	1
	185	1
[redacted]	[redacted]	[redacted]
12986343	190	39
12986344	181	14
12986345	221	16
	BULK	33
	BULK	42
12986653-4	233	21
12986665	186	3
12986675	272	28
	278	31
12986678	272	74
	278	70
12987584	271	29
	275	33
12987586	181	47

PART NUMBER	FIG.	ITEM
12987597	327	2
12987605	187	34
12987624	210	19
129888	62	253
12991927	272	49
	278	47
12991930	270	37
	274	36
[redacted]	[redacted]	[redacted]
12991948	272	41
	278	38
12991950	270	35
	274	39
12991955	272	23
	278	32
12991956	107	23
	268	1
	276	1
12991956-1	99	6
	107	23
	268	1
	276	1
12991962	99	18
	107	33
	268	4
	276	4
12991987	270	36
	274	40
12991996	270	18
	274	20

PART NUMBER	FIG.	ITEM
12991997	186	11
[redacted]	[redacted]	[redacted]
12992057-1	257	17
12992065	257	7
12992066	181	28
12992069	181	29
12992070	181	3
[redacted]	[redacted]	[redacted]
12992083-3	270	20
	274	22
12992085	271	10
	275	6
12992085-1	275	6
12992085-3	271	10
	275	6
12992093-3	270	28
	274	30
[redacted]	[redacted]	[redacted]
12992149	278	79

PART NUMBER	FIG.	ITEM
[redacted]	[redacted]	[redacted]
12994782	29	39
	211	29
12994822	190	5
	[redacted]	[redacted]
12994824	270	9
	274	12
	[redacted]	[redacted]
12994825-1	278	72
	[redacted]	[redacted]
[redacted]	[redacted]	[redacted]
[redacted]	[redacted]	[redacted]
12994838	272	68
	278	66
12995060	181	29
13007281	272	76
	278	80
[redacted]	[redacted]	[redacted]
13007284	278	76
[redacted]	[redacted]	[redacted]
13007286	278	78
[redacted]	[redacted]	[redacted]
[redacted]	[redacted]	[redacted]
	[redacted]	[redacted]
[redacted]	[redacted]	[redacted]
	[redacted]	[redacted]
13007307	272	80
	278	77
[redacted]	[redacted]	[redacted]
[redacted]	[redacted]	[redacted]
[redacted]	[redacted]	[redacted]
[redacted]	[redacted]	[redacted]
[redacted]	[redacted]	[redacted]

PART NUMBER	FIG.	ITEM
13007325	296	1
13007328	296	16
13007329	296	12
13007332	296	20
13007332-1	300	38
13007333	296	2
13007334	296	14
13007337	296	6
13007339	295	4
13007340	295	5
13007343	295	1
13007344	295	3
13007349	211	4
13007357	183	20
13007359	183	22
13007360-1	183	5
13007370	232	16
13007407-11	[redacted]	[redacted]
	299	1
[redacted]	[redacted]	[redacted]
[redacted]	[redacted]	[redacted]
	[redacted]	[redacted]
[redacted]	[redacted]	[redacted]
[redacted]	[redacted]	[redacted]
13015006	300	23
13015007	300	10
13015008	300	21
13015009	300	57
13015010	300	30
13015011	300	14
13015012	300	9
13015015	300	47
13015017	300	55

PART NUMBER	FIG.	ITEM
13015021	213	4
13015022-1	300	44
13015023-8	300	8
13015024-1	300	36
13015028	300	3
13015066	278	71
[redacted]	[redacted]	[redacted]
13015067-2	278	73
[redacted]	[redacted]	[redacted]
13015072-3	183	10
[redacted]	[redacted]	[redacted]
[redacted]	[redacted]	[redacted]
[redacted]	[redacted]	[redacted]
[redacted]	[redacted]	[redacted]
[redacted]	[redacted]	[redacted]
[redacted]	[redacted]	[redacted]
[redacted]	[redacted]	[redacted]
[redacted]	[redacted]	[redacted]
13015096	227	13
13015165	305	108
13015167	184	75
13015168	189	11
13015169	189	10
13015173	189	16
13015174	189	17
13015175	189	18
13015176	189	13
13015177	189	12
13015179	189	1
13015185	189	5
13015247	278	66
13019004	112	19
13020198	271	39

PART NUMBER	FIG.	ITEM
	275	42
[redacted]	[redacted]	[redacted]
[redacted]	[redacted]	[redacted]
[redacted]	[redacted]	[redacted]
[redacted]	[redacted]	[redacted]
[redacted]	[redacted]	[redacted]
[redacted]	[redacted]	[redacted]
[redacted]	[redacted]	[redacted]
[redacted]	[redacted]	[redacted]
[redacted]	[redacted]	[redacted]
[redacted]	[redacted]	[redacted]
[redacted]	[redacted]	[redacted]
[redacted]	[redacted]	[redacted]
[redacted]	[redacted]	[redacted]
[redacted]	[redacted]	[redacted]
[redacted]	[redacted]	[redacted]
[redacted]	[redacted]	[redacted]
13020221	189	4
[redacted]	[redacted]	[redacted]
13020292	187	19
13020293	282	1
13020294	282	3
13020300	185	95
[redacted]	[redacted]	[redacted]
13020307	272	40
	278	33
13020308	272	36
	278	27
13020309	[redacted]	[redacted]
13020311	272	73
	278	69
13020312	272	35
	278	26

PART NUMBER	FIG.	ITEM
13020313	272	72
	278	74
13020314	272	50
	278	48
13020315	278	28
13020315-1	272	37
	278	28
13020316-1	272	4
	278	3
13020317-1	272	12
	278	5
[redacted]	[redacted]	[redacted]
13020323	272	52
	278	37
[redacted]	[redacted]	[redacted]
[redacted]	[redacted]	[redacted]
[redacted]	[redacted]	[redacted]
[redacted]	[redacted]	[redacted]
[redacted]	[redacted]	[redacted]
[redacted]	[redacted]	[redacted]
[redacted]	[redacted]	[redacted]
[redacted]	[redacted]	[redacted]
[redacted]	[redacted]	[redacted]
[redacted]	[redacted]	[redacted]
[redacted]	[redacted]	[redacted]
13020348	270	40
	274	50
13020354	233	12
13020355	233	20
13020393	186	12
13020436	272	79
	278	49
13020444	270	39
	274	49
[redacted]	[redacted]	[redacted]
[redacted]	[redacted]	[redacted]
[redacted]	[redacted]	[redacted]
[redacted]	[redacted]	[redacted]
[redacted]	[redacted]	[redacted]
13020454	272	78
	278	59
13020455	272	77
	278	60
13020493	272	38
	278	29
[redacted]	[redacted]	[redacted]
13023196	220	3
[redacted]	[redacted]	[redacted]
[redacted]	[redacted]	[redacted]
[redacted]	[redacted]	[redacted]
[redacted]	[redacted]	[redacted]
[redacted]	[redacted]	[redacted]
[redacted]	[redacted]	[redacted]
13023287	272	27
[redacted]	[redacted]	[redacted]
	[redacted]	[redacted]
[redacted]	[redacted]	[redacted]
[redacted]	[redacted]	[redacted]
[redacted]	[redacted]	[redacted]
[redacted]	[redacted]	[redacted]
[redacted]	[redacted]	[redacted]
[redacted]	[redacted]	[redacted]
[redacted]	[redacted]	[redacted]
[redacted]	[redacted]	[redacted]

PART NUMBER	FIG.	ITEM
[redacted]	[redacted]	[redacted]
13023329	271	54
	275	56
13023331	188	7
13023333	188	18
13023335	188	19
13023336	188	20
[redacted]	[redacted]	[redacted]
13023391-8	179	47
13023407-1	179	43
13023407-2	179	43
13023411	179	35
13023412	179	26
13023413	179	18
13023414	179	17
13023415	179	29
13023416	179	42
13023417	179	38
13023418	179	33
13023419	179	19
13024503	282	9
13024504	282	2
13024517-1	202	7
13024517-2	202	5
13024518	179	16
13024519	202	9
13024520	202	15
13024521	202	11
13024522	200	17
13024523	179	49
13024524	202	1
13024526	179	41
13024527	179	31

PART NUMBER	FIG.	ITEM
13024544-1	179	37
13024544-2	179	32
13024544-3	179	28
13024545-1	179	36
13024545-2	179	30
13024545-3	179	27
13024547	179	25
13024548	179	23
13024549	179	20
13024551	179	51
13024554	202	8
13024555	198	6
13024627	318	2
[redacted]	[redacted]	[redacted]
	[redacted]	[redacted]
13024650	300	41
13024687	187	38
13024701	272	29
13024702	272	24
13024704-1	272	26
13024783	184	4
13024784	184	37
[redacted]	[redacted]	[redacted]
	[redacted]	[redacted]
[redacted]	[redacted]	[redacted]
[redacted]	[redacted]	[redacted]
13024811	184	76
	185	85
13024862	318	3
13024881	300	52
13024882	300	50
13024914	272	30
	278	9

PART NUMBER	FIG.	ITEM
[redacted]	[redacted]	[redacted]
13035114	299	2
13035116	272	39
	278	30
[redacted]	[redacted]	[redacted]
13038592	272	25
13038593	270	22
	274	35
[redacted]	[redacted]	[redacted]
13038610	278	17
[redacted]	[redacted]	[redacted]
130478-001	175	3
[redacted]	[redacted]	[redacted]

PART NUMBER	FIG.	ITEM
[redacted]	[redacted]	[redacted]
13143602	325	7
13143606	325	8
13163001	325	9
13211E9224	53	5
[redacted]	[redacted]	[redacted]
13225434		
[redacted]	[redacted]	[redacted]
13294696	260	9
[redacted]	[redacted]	[redacted]
13492644	260	8
13494809-2		
[redacted]	[redacted]	[redacted]
13620159	244	2
[redacted]	[redacted]	[redacted]

PART NUMBER	FIG.	ITEM
[redacted]	[redacted]	[redacted]
137760	62	149
138764	62	258
141875	62	103
143138	62	305
14437200	62	200
145345	62	328
145348	62	327
14648300	63	1
147389	62	92
150PD-6	99	27
	107	7
151249	62	17
151707	62	131
153518S	76	3
154088	63	4
15422600	62	132
154396	62	135
156438	62	99
156439	62	100
157088	63	3
158139	76	2
158250	62	228
169843	62	282
169992	62	279
17108500	62	97
172640	62	232
172723	62	296
173368S	76	1
178334	62	101
178335	62	107
180371	62	52
180372	62	206
180381	62	292
180626	62	88
181027	62	98
181466	63	11
182459	62	16
183122	62	20
186780	62	287
189545	62	24
189582	62	230
191772	64	4
19327600	62	247
193736	62	89
193919	62	23
19605700	62	255
196421	62	212
196949	62	151
19757300	62	8
19758200	64	2
1992952-2	169	2
1TQ-R36-1000-2500G	25	104
	132	76
	133	114
2-146-5	142	33
2-2 140139C	59	84
2-2 140239C	59	83
200-2343-010	260	10
[redacted]	[redacted]	[redacted]
	[redacted]	[redacted]
200064	62	153
200069	64	3
200757	62	289
200861	62	37
201048	62	196

PART NUMBER	FIG.	ITEM
203131	62	91
203310	62	304
203408	64	1
203518	62	192
204165	62	38
206305	62	280
206354	62	10
2068-1145	147	17
207743410000	174	14
208045	62	58
209773	62	114
20R1ECS-C-32XR	BULK	18
21-2-5	142	22
	143	22
2110563P3	323	15
213512	62	25
214183	62	34
214189	62	234
214616	62	163
214751	62	102
2152256-50	305	106
21563200	62	7
21563300	62	21
21674500	62	297
216756	62	300
2190-27	147	5
219139	62	197
22-01943	136	16
	198	11
22927FX	62	11
2311F	318	5
23126CCKW33	90	35
24-00157-823		

PART NUMBER	FIG.	ITEM
25139000	77	2
256022-152	217	1
256172S	60	53
257492	77	3
2583-5BB12	275	57
2584025	15	27
2584439	90	14
2584486	90	15
2584614-1	73	96
2584771	55	23
2584772-1	55	22
2584772-2	55	24
2585163-114	15	8
2585163-124	55	34
2585163-138	58	48
2585163-57	96	44
	97	17
	104	44
	105	9
2585163-68	22	9
2585164-263	94	47
	95	34
	96	9
	97	13
	98	13
	99	40
	100	5
	102	59
	103	32
	104	9
	105	21
	106	13
	107	40

PART NUMBER	FIG.	ITEM
	108	5
	109	48
2585164-264	94	48
	98	11
	102	63
	106	11
2585164-279	199	29
2585164-280	94	37
	96	5
	102	37
	104	5
2585705-2	199	30
2586895	42	28
	43	40
	44	40
2586980	305	86
2587035-2	243	26
2587143	58	9
2587562	191	21
2588273	127	1
2588282	128	8
2588356	162	18
2588756	305	25
2588757	305	26
2590039-3	192	7
2611-04-02-02	25	103
2613-02-02-04	81	46
2616950G001	27	44
	28	50
2623048	58	47
2623103-2	15	6
2650-12	BULK	22
2720-2788	46	7
	51	7
2774	33	12
2793-152	147	1
2828-334	147	11
2BC715A14B14C12F17G21Z	BULK	32
3-113	142	15
	143	15
3-154	142	4
3-159	142	27
3-164	142	13
3-167	142	18
	143	18
3-178	142	11
	143	11
30-5632-4	311	14
3000067-016	127	112
3000076-014	127	109
3000076-016	127	111
3000082	62	85
3003156	62	269
3003602	62	110
3004152	62	36
	238	83
3004749	62	226
3004907	62	108
3006182	62	123
3007025	62	260
3008465	63	10
3008468	62	95
3008469	62	49
3010595	62	156
3010596	62	155
3010597	62	285

PART NUMBER	FIG.	ITEM
3010937	77	1
3011715	62	62
3011716	62	22
3012470	62	46
3012471	62	33
3012472	62	157
3012477	62	47
3012483	62	27
3012971	62	121
3013339	62	40
3013786	62	5
3014248	62	277
3014766	62	31
3015282	62	265
3015283	62	164
301711300	62	322
3018920	62	250
3020184	62	30
3021420	62	251
3021470	62	96
3022548	62	275
3022549	62	274
3022590	62	134
3022709	62	193
3023867	62	42
3024236	62	278
302432000	62	281
3025459	62	268
302587800	62	283
3028324	62	209
3028325	62	218
3028665	62	84
3028673	62	63
3029616	62	175
3030207	62	138
3033038	62	61
3033412	62	216
3033953	62	301
3034526	62	79
3035026	62	162
3036666	62	65
3036715	62	60
3036716	62	53
3037537	62	244
3038041	62	284
3038076	62	6
3040814	62	64
3040838	62	125
3040997	62	146
304101300	62	109
304146600	62	256
3042888	62	28
3043T36	296	18
3046200	62	267
3046201	62	74
3046283	62	73
3048296	62	262
3049216	62	173
3049221	62	171
3049302	62	178
3052626	62	259
3056138	62	115
3058793	62	68
305879400	62	72
3058796	62	195
306005400	62	90

PART NUMBER	FIG.	ITEM
3060056	62	77
3060069	62	143
3060379	62	179
3060380	62	180
3060435	62	4
3060459	62	69
3060517	62	166
3060528	62	172
3060567	62	177
3060573	62	165
3060613	62	122
3060623	62	14
3060624	62	12
3060882	62	158
3061438	62	174
3061501	62	78
3061592	62	124
3062153	62	87
3062591	62	82
3063240	62	299
3063484	62	154
3063704	62	311
3063708	62	313
3063712	62	204
3063714	62	225
3063729	62	54
3063739	62	245
3063753	62	217
3063761	62	324
3063772	62	312
3063777	62	194
3064539	62	188
3064666	62	208
3064668	62	199
3064669	62	319
3064671	62	224
3064672	62	205
3064721	62	316
3064830	62	144
3065723	62	168
3065724	62	309
3065725	62	323
3065727	62	321
3065730	62	325
3065731	62	315
3065944	62	239
3066140	62	70
3066141	62	71
3066143	62	83
3066144	62	140
3066153	62	80
3066159	62	241
3067-26	147	12
3067166	62	120
3067226	62	139
3067227	62	137
3067288	62	15
3067328	62	116
3067329	62	111
3067337	62	128
	65	22
3068562	62	326
3068575	62	235
3068676	62	293
3068681	62	127
3068686	62	113

PART NUMBER	FIG.	ITEM
3068712	62	308
3068713	62	314
3068714	62	310
3068715	62	320
3068727	62	286
3068732	62	222
3068929	62	129
3068983	62	294
3069839	62	3
3070394	62	66
3070395	62	242
3071160	62	295
3071473	62	257
3071476	62	32
307315100	62	237
3073210	62	170
3074599	62	264
	65	25
	70	3
3074696	62	13
3076489	62	288
3077366	62	189
3078125	62	190
3079630	62	106
30800001	253	1
30800002	223	11
3086378	62	67
3088368	62	264
3088BE	172	40
3101498	62	75
3152-4-3-8	57	87
3163720	319	45
3163937	319	78
3189584-1	169	3
3189585-1	169	8
3189586-1	169	4
3189607-0001	169	1
31A925XLW	109	23
	110	15
32-356	143	4
32-391	143	7
3201039	62	119
3202044	62	261
3203133P13	237	51
3203133P14	238	44
3203133P16	235	96
	237	2
	255	91
[redacted]	[redacted]	[redacted]
	[redacted]	[redacted]
	[redacted]	[redacted]
	[redacted]	[redacted]
	[redacted]	[redacted]
	[redacted]	[redacted]
325199400	62	202
3283233	62	220
3301949S	76	5
3302009S	60	20
3303M	311	9
3375058	305	28
3375092	319	55
3375111	305	48
3375162	319	64
3375318	319	54
3375326	319	75
3375629	319	31

PART NUMBER	FIG.	ITEM
3376255	319	56
3376592	305	58
3376617	319	36
3377079	319	42
3377269	319	67
33M1127-107C	12	23
33M1127-109C	12	12
33M1127-113	12	25
340252403ADX	139	17
3408609	62	211
345-004	55	8
355 1503 001	26	28
355-1508-004	26	1
3550(MNT90)	241	24
3552912	62	9
357-588	305	29
361219	134	68
361223	134	36
361224	134	69
361225	134	13
361227	134	18
361228	134	55
361252	134	50
361255	134	52
361325	134	14
361363	134	3
361443	134	45
361465	134	66
361466	134	64
361467	134	67
361641-903	175	4
361648	134	62
375N300-001-21	132	18
	133	44
3803194	KITS	18
3803323	62	231
3803551	63	15
3803561	KITS	19
3818271	62	169
3818599	62	207
3822503	319	58
3822524	305	38
3823024	305	52
3823348	305	59
3823488	305	40
3823610	305	50
3823798	319	57
3823815	319	73
3824277	319	35
3903597	62	317
391 0282 011	26	6
391 0681 207	26	9
391 1433 016	26	2
391 1621 027	26	15
391 1823 215	KITS	20
391 1842 004	26	29
391 2089 027	26	16
391 2181 999	26	19
391 2282 031	26	17
391 2282 242	26	20
391 2282 246	26	3
391 2282 247	26	27
391 2383 103	26	22
391 2681 406	26	12
391 2681 521	26	14
391 2681 522	26	23

PART NUMBER	FIG.	ITEM
391 2881 952	26	30
391 2882 052	26	21
391 2882 118	26	24
391 2882 120	26	11
391 2882 121	26	13
391 2882 122	26	10
391 2882 123	26	4
391 2882 124	26	26
391 3384 348	26	25
391 3581 906	26	5
391 3581 907	26	7
3911432004	26	18
3913994	63	16
3922845	62	191
39689	78	2
39691-5	78	10
4-36-1	143	24
4-4 140239C	81	49
4-4-4 070432C	59	64
4-41-1	142	23
	143	23
400858	134	46
401067	134	48
4025019	62	181
4026171	62	266
4080981	62	243
409015	134	49
409851	134	57
409985	134	15
4100-83	147	18
410411	134	56
410485	134	12
410571	134	58

PART NUMBER	FIG.	ITEM
410576	134	59
410643	134	65
410694	134	70
410750	134	2
410759	134	26
410809	134	20
410837	134	29
410838	134	21
410839	134	37
410840	134	39
410841	134	63
410843	134	41
410844	134	42
410846	134	30
410847	134	34
410848	134	35
410849	134	28
410850	134	33
410883	134	24
410884	134	27
410885	134	23
410886	134	25
410929	134	44
410930	134	43
410967	134	16
410970	134	1
411248 REV 3	134	22
41372B	131	13
4204347	73	38
42082-2	84	6
423914-801	100	82
42498-1	84	10
42499-1	84	3

PART NUMBER	FIG.	ITEM
42505-1	84	17
42505-2	84	16
42505-3	84	18
42506-1	84	19
42508-1	84	2
426921	27	31
	28	37
	29	79
42863-1	84	13
4306960	319	69
444025	59	70
465-0724	305	114
465-0725	305	113
46650-51RFX	108	55
466N9V02	109	17
	110	11
466N9V14	109	12
	110	9
490-46-106-1	122	6
4910106	62	183
4918888	305	46
4920064	62	302
4920065	KITS	21
4956701	62	264
4970548	62	133
4970549	62	130
4986214	62	215
49955-22L	178	18
	179	8
5-13-2512P31	59	9
	75	44
5-4-1304-98	62	273
5005864	16	11

PART NUMBER	FIG.	ITEM
501-021-4	241	23
501-021-5	241	48
501-209-5	241	36
501-216-1	241	9
501-244-1	241	55
501-261-1	241	54
501-277-2	241	31
501178	208	10
	209	10
506-0045	305	85
5100-81MD	38	125
5120-293-1282	305	6
5131755	41	1
5214479	79	7
	88	3
5227606	127	20
5281886	118	35
	119	17
5291764	168	1
5294465	168	6
5294468	170	13
5297084	281	1
53336	127	21
53698-99	310	6
55-6700-1	117	26
55098-95	310	2
55098-96	310	4
55098-97	310	3
55098-98	310	1
55098-99	310	5
5573615	305	20
56-99-238-20	271	65
	275	67

PART NUMBER	FIG.	ITEM
5605-41	75	7
5705235	KITS	22
5705484	KITS	23
5710-61-30	75	6
572929	147	4
57549-10	84	11
57K0332	KITS	24
57K0388	KITS	25
57K0389	KITS	26
57K0390	KITS	27
57K0391	KITS	28
57K0394	58	2
	62	1
57K0749	58	1
57K1399	KITS	29
57K1539	58	2
	62	1
57K6607	KITS	30
57K6723	KITS	31
57K6724	KITS	32
57K6725	KITS	33
57K6743	KITS	34
5806-25-3	15	54
585-1215	112	12
585-1315	112	7
585-1415	112	18
58989	84	8
58990	84	7
599-281-20	319	62
599-281-8	319	61
599-596	319	77
599-7746	319	60
6 WLO-WLNL-S	133	92

PART NUMBER	FIG.	ITEM
6-6 070321CA	154	64
6-6 140130C	117	13
6-6-6 520401C-N507-90	133	106
6-F50L0-S	133	104
6-GTX-S	154	65
60008	131	15
60019	131	3
60048	131	23
60056	131	22
6007-2RS	223	18
60100	131	4
60172	131	10
60185	131	16
6023A	319	40
60399	131	5
6050K13	187	33
60560	131	9
6084	96	25
	104	25
6209-2RS1/C3LHT55	85	6
	85	14
625-00632	142	21
	143	21
625-00633	142	30
	143	31
625-00634	142	25
	143	26
62RB114S0000	65	2
	71	1
632208	134	38
632218	134	72
63385	62	126
638	165	10

PART NUMBER	FIG.	ITEM
63842	62	56
[redacted]	[redacted]	[redacted]
[redacted]	[redacted]	[redacted]
6503-04-04	59	71
6506-02-04	25	102
67535-SS-11-SLDS	175	1
67946	62	159
67950	62	167
68139	62	203
68143	62	213
68190	62	51
68274	62	160
68425	62	249
6959200	62	145
6C6XS	154	57
6F6X-S	154	76
6TMF/TYPEI	95	28
	103	28
6TMF/TYPEII	95	28
	103	28
6TMF/TYPEIII	95	28
	103	28
7000296	163	1
70056-11	78	5
70056-211	78	9
70056-3	78	14
7017826-11	127	45
70295	62	2
7044253	16	2
704476	134	5
7049603	16	3
70700	63	2
7082641	305	45

PART NUMBER	FIG.	ITEM
70880-4	78	21
70880-5	78	19
70897	62	291
715-039-1	241	2
715-040-3	241	40
715-071-1	241	15
715-223-2	241	14
715-244-1	241	10
722-017-001	174	11
725593	84	12
733-002	272	75
	278	75
7357954	115	15
7357955	115	19
7359524	168	2
7416862	95	16
	103	16
7506M	62	229
762-206-7	216	7
	217	7
762-206-8	216	6
	217	6
766012-152	219	3
77-600	82	12
7714880	16	1
7714881	16	4
773746	134	40
773798	134	31
7760103	15	16
7760104	16	8
7760850	18	6
7761718	118	37
[redacted]	[redacted]	[redacted]

PART NUMBER	FIG.	ITEM
79-500MS	82	21
7962244	114	4
	280	4
7962254	114	2
	280	2
7962257	115	9
7962261	115	4
7962263	115	1
7962266	115	3
7962267	115	2
7962268	115	5
7962269	115	16
7968260	127	19
7974046	154	48
7983053	115	12
8022731	25	121
804-0333-500	155	23
81511	137	23
8200055	247	4
825	319	13
8265S	76	4
831328-001	216	5
	217	5
8327	272	67
	278	65
8338561	98	7
	106	7
8338564	281	3
8338566	96	7
	104	7
	111	4
	116	4
	147	2
8338567	96	8
	104	8
	111	5
	116	5
	147	3
8338570	281	2
8338572	97	38
	105	32
	281	6
8338573	97	37
	105	33
	281	5
8340656	25	130
	141	15
	161	2
8341554	29	71
8341563	29	76
8364428	95	7
	100	38
	103	7
	108	36
	109	19
8376702	171	9
8387678-1	73	17
8500A13	187	35
850254	305	105
8630-27-5	38	84
8668096	16	7
8690463	159	14
8690464	157	6
8690465	157	9
8690468	166	8
	168	7

PART NUMBER	FIG.	ITEM
8690469	158	42
	159	42
	193	6
	194	6
8690470	166	7
8690471	159	27
	168	14
	169	15
	170	10
8690472	166	2
8690473	157	19
8690474	166	3
	171	13
	171	21
	172	81
	173	32
	193	44
	194	47
8690475	290	1
	[redacted]	[redacted]
8690476	157	5
8690477	166	9
	193	1
	194	1
	194	1
8690478	157	20
	158	41
	159	45
8690479	157	11
	158	46
	168	12
8690480	171	12
8690481	157	14

PART NUMBER	FIG.	ITEM
	158	11
	159	11
8690482	158	44
	159	40
	193	43
	194	46
	290	6
	[redacted]	[redacted]
8690484	165	9
8690485	158	20
	159	20
8690486	159	29
8690490	159	22
8690493	158	19
	159	19
8690521	165	5
8690536	165	11
8704692	90	13
8720026	151	3
	153	21
8720150	127	18
	133	46
	271	33
	275	37
8724494	94	2
	102	2
8724784	BULK	7
8731984	127	26
	162	36
8737857	95	15
	103	15
8741566	115	6
8744898	114	1

PART NUMBER	FIG.	ITEM
	280	1
8747967	115	21
8756256	46	6
	51	6
8756881	182	47
8756888	39	9
	40	21
	182	15
8756978	226	9
8763238	130	13
	160	7
	172	71
8763252	157	28
	169	17
	170	14
8763385	15	32
8763469	141	29
8763473	141	27
8763560	139	33
	140	21
	199	16
	200	26
8763586	139	11
	140	35
	199	20
	200	10
8763588	199	15
	200	6
8763597	139	8
	140	8
	199	7
8763598	139	34
	140	32

PART NUMBER	FIG.	ITEM
8906K5993	112	14
8906K5994	112	15
8T35	162	63
90003-1	85	9
90004-1	85	8
90005-1	85	3
90006-1	85	16
90011-1	85	1
90012-1	85	17
90013-1	85	15
90015-1	85	13
90016-1	85	11
90172A542	271	78
	275	81
90273A628	296	11
90283A194	271	60
	275	62
90283A199	271	62
	275	64
902955-803	172	10
9054221	62	233
90543-1	75	16
90587-1	75	19
90591-1	75	14
90592-1	75	35
90594-1	75	22
90597-1	75	1
90613-1	75	18
90617-1	75	32
90618-2	75	25
90807-1	75	20
91308-1	75	43
91358-1	75	33

PART NUMBER	FIG.	ITEM
919343-001	175	7
93190A540	169	7
9376166	260	4
9379283	319	7
9379286-2	305	98
9379296	305	81
9379389	238	34
9379390	238	35
9379434	235	91
	237	26
9379461	319	24
9379463	255	81
9379467	256	8
9379594	197	7
9379596	178	4
9379604	94	32
	102	32
	271	16
	275	17
9379619	193	8
	194	8
9379621	229	13
9379648	182	4
9379714	207	1
9379728	227	28
9379797	193	41
	194	44
9379801	181	48
9379822	185	83
9379823	184	77
	185	87
9379824	184	78
	185	88
9379825	184	79
	185	89
9379825-5	185	90
[redacted]		
9379834	182	11
9379865	193	42
	194	45
9379895-9	184	5
9379896	184	89
	185	105
9379897	184	65
9379899	184	80
	185	93
9379914	242	3
9379924	184	46
	185	52
9379937	206	10
9379946	184	42
	185	50
9379951	184	67
	185	77
9379953	185	57
9379953-1	184	51
9379960	193	4
	194	4
9379972	218	5
9379989	218	23
9379990	218	8
9379991	218	2
9379992	218	21
9379993	218	26
9379994	218	9
9380002	184	25

PART NUMBER	FIG.	ITEM
	185	25
9380003	184	28
	185	28
9380004	184	26
	185	26
9380005	184	24
	185	24
9380025	184	39
	185	47
9380036	224	8
9380038	226	4
9380039	226	26
9380042	226	30
9380044	226	8
9380051	224	16
9380054	226	6
9380055	224	4
9380056-1	226	24
9380056-2	226	27
9380060-1	226	5
9380060-4	226	22
9380060-5	226	29
9380065	226	16
9380066	224	18
9380068	224	12
9380069	226	7
9380070	225	6
9380088	225	4
9380090	225	12
9380091	225	2
9380092	225	1
9380097	224	19
9380100	226	3

PART NUMBER	FIG.	ITEM
9380103	226	23
9380110	184	30
	185	30
9380118-1	218	1
9380118-2	218	3
9380133	218	29
9380135	218	27
9380137	218	16
9380157	227	51
9380167	184	88
	185	104
9380168	184	86
	185	102
9380227	184	83
	185	98
9380232-1	188	13
9380233	188	17
9380250	184	87
	185	103
9380253	184	70
9380255	184	71
9380262	268	16
	276	17
9380267	195	6
	196	6
9380268	195	3
	196	3
9380270	184	93
	185	110
9380271	226	12
9380273	184	98
	185	115
9380277	193	5

PART NUMBER	FIG.	ITEM
	194	5
9380282	225	5
9380283	225	3
9380286	184	61
	185	69
9380308	190	14
9380312	190	29
9380315	184	85
	185	101
9380317	190	28
9380320	184	84
	185	100
9380321	184	103
	185	120
9380322	190	44
9380324	184	94
	185	111
9380326	190	46
9380330	184	44
	185	51
9380331	184	40
	185	48
9380336	226	18
9380337-1	188	12
9380343	188	2
9380362	184	32
	185	31
9380363	184	50
	185	56
9380369	226	13
9380370	226	19
9380400	97	33
	105	38

PART NUMBER	FIG.	ITEM
	243	4
9380401	244	1
9380402	244	3
9380403	246	8
9380404	246	4
9380405	249	5
9380407	250	1
9380409	249	11
9380410	249	8
9380411	246	6
9380415	252	3
9380416	251	1
9380417	249	6
9380418	245	9
9380419	244	9
9380446	243	1
9380447	243	11
9380474	184	60
	185	67
9380475	184	55
	185	62
9380476	184	58
	185	65
9380480	190	6
9380498	184	108
	185	124
9380499	184	107
	185	123
9380500	184	104
	185	121
9380504	188	10
9380506	228	1
9380511	190	35

PART NUMBER	FIG.	ITEM
9380547-1	184	99
	185	116
9380547-2	184	100
	185	117
9380548	190	47
9380563	184	102
	185	119
9380568	184	94
	185	111
9380651	225	8
9380652	225	7
9380973	271	28
	275	32
9380985	188	14
9381024	184	72
	185	81
9381028	177	10
9381046-3	183	15
9381068	182	52
9381071	200	4
9381072	182	53
941YL-0450	127	123
9486-0008	93	31
95795A030	296	15
95795A035	296	4
9657K113	270	16
	274	18
973-0060	241	4
[redacted]	[redacted]	[redacted]
98-0440-4268-1	282	13
9800-07010-9005	172	82
9800-07060-9001	106	61
9800-07060-9005	106	61
9800-17925-9000	106	62
9800-40910-0000	106	62
9800-96000-5001	172	3
9800-96612-0512	172	4
9800-96810-0000	172	43
9982	75	36
999-038-3	241	30
999-038-4	241	33
999-1206	319	30
999-247-2	241	42
999-247-3	241	34
999-284-2	241	35
999-284-3	241	1
9995342	60	52

TM 9-2350-439-23P-1

30 November 2019

By Order of the Secretary of the Army:

JAMES C. MCCONVILLE
General, United States Army
Chief of Staff

Official:

KATHLEEN S. MILLER
Administrative Assistant
to the Secretary of the Army
[redacted]

DISTRIBUTION:
Distributed in electronic media only (EMO).

BEREGINI BEREGINI BEREGINI

THE METRIC SYSTEM AND EQUIVALENTS

Linear Measure

1 Centimeter = 10 Millimeters = 0.01 Meters = 0.3937 Inches
1 Meter = 100 Centimeters = 1000 Millimeters = 39.37 Inches
1 Kilometer = 1000 Meters = 0.621 Miles

Weights

1 Gram = 0.001 Kilograms = 1000 Milligrams = 0.035 Ounces
1 Kilogram = 1000 Grams = 2.2 Pounds
1 Metric Ton = 1000 Kilograms = 1 Megagram = 1.1 Short Tons

Liquid Measure

1 Milliliter = 0.001 Liters = 0.0338 Fluid Ounces
1 Liter = 1000 Milliliters = 33.82 Fluid Ounces

Square Measure

1 Sq Centimeter = 100 Sq Millimeters = 0.155 Sq Inches
1 Sq Meter = 10,000 Sq Centimeters = 10.76 Sq Feet
1 Sq Kilometer = 1,000,000 Sq Meters = 0.0386 Sq Miles

Cubic Measure

1 Cu Centimeter = 1,000 Cu Millimeters = 0.06 Cu Inches
1 Cu Meter = 1,000,000 Cu Centimeters = 35.31 Cu Feet

Temperature

9/5 °C +32 = °F
5/9 (°F - 32) = °C
212° Fahrenheit is equivalent to 100° Celsius
90° Fahrenheit is equivalent to 32.2° Celsius
32° Fahrenheit is equivalent to 0° Celsius

APPROXIMATE CONVERSION FACTORS

To Change	To	Multiply By
Inches	Centimeters	2.540
Feet	Meters	0.305
Yards	Meters	0.914
Miles	Kilometers	1.609
Sq Inches	Sq Centimeters	6.451
Sq Feet	Sq Meters	0.093
Sq Yards	Sq Meters	0.836
Sq Miles	Sq Kilometers	2.590
Acres	Sq Hectometers	0.405
Cubic Feet	Cubic Meters	0.028
Cubic Yards	Cubic Meters	0.765
Fluid Ounces	Milliliters	29.573
Pints	Liters	0.473
Quarts	Liters	0.946
Gallons	Liters	3.785
Ounces	Grams	28.349
Pounds	Kilograms	0.454
Short Tons	Metric Tons	0.907
Pound-Feet	Newton-Meters	1.356
Pounds per Sq Inch	Kilopascals	6.895
Miles per Gallon	Kilometers per Liter	0.425
Miles per Hour	Kilometers per Hour	1.609

To Change	To	Multiply By
Centimeters	Inches	0.394
Meters	Feet	3.280
Meters	Yards	1.094
Kilometers	Miles	0.621
Sq Centimeters	Sq Inches	0.155
Sq Meters	Sq Feet	10.764
Sq Meters	Sq Yards	1.196
Sq Kilometers	Sq Miles	0.386
Sq Hectometers	Acres	2.471
Cubic Meters	Cubic Feet	35.315
Cubic Meters	Cubic Yards	1.308
Milliliters	Fluid Ounces	0.034
Liters	Pints	2.113
Liters	Quarts	1.057
Liters	Gallons	0.264
Grams	Ounces	0.035
Kilograms	Pounds	2.205
Metric Tons	Short Tons	1.102
Newton-Meters	Pound-Feet	0.738
Kilopascals	Pounds per Sq Inch	0.145
Kilometers per Liter	Miles per Gallon	2.354
Kilometers per Hour	Miles per Hour	0.621

BEREGINI

[redacted]